AIRSTAGE

AIR CONDITIONER

4-unit multi-split type,
5-unit multi-split type

FUJITSU

REFRIGERANT R32
INVERTER

DESIGN & TECHNICAL MANUAL

INDOOR

AUXG07–22KVLA

ARXG07–14KSLAP
ARXG18KSLAP

ARXG07–14KLLAP
ARXG18KLLAP

ARXG22KMLB

ARXH12–18KMTAP
ARXH22KMTAP

ASEH07–14KMCG
ASEH07–14KMCG-B

ASEG07–14KETF
ASEG07–14KETF-B

ASEH07–14KGTG

ASEH05–12KNCA

ASEG18–24KMTE

ABEG18–22KRTA

AGEG09–14KVCA

OUTDOOR

AOEG30KBTA4
AOEG36KBTA5

FUJITSU GENERAL LIMITED

DR_MU025ES_16
2024.12.16

Notices:
- Product specifications and design are subject to change without notice for future improvement.
- For further details, please check with our authorized dealer.

Trademarks

FGLair™ is trademark of FUJITSU GENERAL LIMITED in the United States, other countries or both.

“AIRSTAGE Mobile” is a trademark of FUJITSU GENERAL LIMITED.

Android and Google Play are trademarks of Google LLC.

App Store is a service mark of Apple Inc., registered in the U.S. and other countries.

IOS is a trademark or registered trademark of Cisco in the U.S. and other countries and is used under license.

CONTENTS

CONTENTS (continued)

CONTENTS (continued)

CONTENTS (continued)

CONTENTS (continued)

CONTENTS (continued)

Part 1. INDOOR UNIT

COMPACT CASSETTE TYPE:

AUXG07–22KVLA

MINI DUCT TYPE:

ARXG07–18KSLAP

SLIM DUCT TYPE:

ARXG07–18KLLAP

MEDIUM STATIC PRESSURE DUCT TYPE:

ARXG22KMLB
ARXH12–22KMTAP

WALL MOUNTED TYPE:

ASEH07–14KMCG
ASEH07–14KMCG-B
ASEG07–14KETF
ASEG07–14KETF-B
ASEH07–14KGTG
ASEH05–12KNCA
ASEG18–24KMTE

CEILING TYPE:

ABEG18–22KRTA

FLOOR TYPE:

AGEG09–14KVCA

1. Model lineup

Indoor unit			
 AUXG07KVLA AUXG09KVLA AUXG12KVLA AUXG14KVLA AUXG18KVLA AUXG22KVLA	 ARXG07KSLAP ARXG09KSLAP ARXG12KSLAP ARXG14KSLAP ARXG18KSLAP	 ARXG07KLLAP ARXG09KLLAP ARXG12KLLAP ARXG14KLLAP ARXG18KLLAP	 ARXG22KMLB
 ARXH12KMTAP ARXH14KMTAP ARXH18KMTAP ARXH22KMTAP	 ASEH07KMCG ASEH09KMCG ASEH12KMCG ASEH14KMCG	 ASEH07KMCG-B ASEH09KMCG-B ASEH12KMCG-B ASEH14KMCG-B	 ASEG07KETF ASEG09KETF ASEG12KETF ASEG14KETF
 ASEG07KETF-B ASEG09KETF-B ASEG12KETF-B ASEG14KETF-B	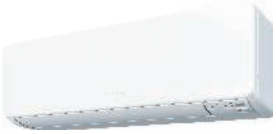 ASEH07KGTG ASEH09KGTG ASEH12KGTG ASEH14KGTG	 ASEH05KNCA ASEH07KNCA ASEH09KNCA ASEH12KNCA	 ASEG18KMTE ASEG22KMTE ASEG24KMTE
 ABEG18KRTA ABEG22KRTA	 AGEG09KVCA AGEG12KVCA AGEG14KVCA		

4-5 UNIT
MULTI-SPLIT TYPE

Outdoor unit
 AOEG30KBTA4 AOEG36KBTA5

1-1. Indoor unit connection patterns

■ 4-unit multi-split type

AOEG30KBTA4					
Combination no.	Unit 1	Unit 2	Unit 3	Unit 4	Total
1	5	22	—	—	27
2	5	24	—	—	29
3	7	22	—	—	29
4	7	24	—	—	31
5	9	22	—	—	31
6	9	24	—	—	33
7	12	18	—	—	30
8	12	22	—	—	34
9	12	24	—	—	36
10	14	18	—	—	32
11	14	22	—	—	36
12	14	24	—	—	38
13	18	18	—	—	36
14	18	22	—	—	40
15	18	24	—	—	42
16	22	22	—	—	44
17	22	24	—	—	46
18	24	24	—	—	48
19	5	5	18	—	28
20	5	5	22	—	32
21	5	5	24	—	34
22	5	7	18	—	30
23	5	7	22	—	34
24	5	7	24	—	36
25	5	9	14	—	28
26	5	9	18	—	32
27	5	9	22	—	36
28	5	9	24	—	38
29	5	12	12	—	29
30	5	12	14	—	31
31	5	12	18	—	35
32	5	12	22	—	39
33	5	12	24	—	41
34	5	14	14	—	33
35	5	14	18	—	37
36	5	14	22	—	41
37	5	14	24	—	43
38	5	18	18	—	41
39	5	18	22	—	45
40	5	18	24	—	47
41	7	7	12	—	26
42	7	7	14	—	28
43	7	7	18	—	32
44	7	7	22	—	36
45	7	7	24	—	38
46	7	9	9	—	25
47	7	9	12	—	28
48	7	9	14	—	30
49	7	9	18	—	34
50	7	9	22	—	38

AOEG30KBTA4					
Combination no.	Unit 1	Unit 2	Unit 3	Unit 4	Total
51	7	9	24	—	40
52	7	12	12	—	31
53	7	12	14	—	33
54	7	12	18	—	37
55	7	12	22	—	41
56	7	12	24	—	43
57	7	14	14	—	35
58	7	14	18	—	39
59	7	14	22	—	43
60	7	14	24	—	45
61	7	18	18	—	43
62	7	18	22	—	47
63	7	18	24	—	49
64	9	9	9	—	27
65	9	9	12	—	30
66	9	9	14	—	32
67	9	9	18	—	36
68	9	9	22	—	40
69	9	9	24	—	42
70	9	12	12	—	33
71	9	12	14	—	35
72	9	12	18	—	39
73	9	12	22	—	43
74	9	12	24	—	45
75	9	14	14	—	37
76	9	14	18	—	41
77	9	14	22	—	45
78	9	14	24	—	47
79	9	18	18	—	45
80	12	12	12	—	36
81	12	12	14	—	38
82	12	12	18	—	42
83	12	12	22	—	46
84	12	12	24	—	48
85	12	14	14	—	40
86	12	14	18	—	44
87	12	18	18	—	48
88	14	14	14	—	42
89	14	14	18	—	46
90	5	5	5	12	27
91	5	5	5	14	29
92	5	5	5	18	33
93	5	5	5	22	37
94	5	5	5	24	39
95	5	5	7	12	29
96	5	5	7	14	31
97	5	5	7	18	35
98	5	5	7	22	39
99	5	5	7	24	41
100	5	5	9	9	28
101	5	5	9	12	31
102	5	5	9	14	33
103	5	5	9	18	37
104	5	5	9	24	43
105	5	5	12	12	34

AOEG30KBTA4					
Combination no.	Unit 1	Unit 2	Unit 3	Unit 4	Total
106	5	5	12	14	36
107	5	5	12	18	40
108	5	5	12	24	46
109	5	5	14	14	38
110	5	5	14	18	42
111	5	5	18	18	46
112	5	7	7	9	28
113	5	7	7	12	31
114	5	7	7	14	33
115	5	7	7	18	37
116	5	7	7	22	41
117	5	7	7	24	43
118	5	7	9	9	30
119	5	7	9	12	33
120	5	7	9	14	35
121	5	7	9	18	39
122	5	7	9	24	45
123	5	7	12	12	36
124	5	7	12	14	38
125	5	7	12	18	42
126	5	7	12	24	48
127	5	7	14	14	40
128	5	7	14	18	44
129	5	7	18	18	48
130	5	9	9	9	32
131	5	9	9	12	35
132	5	9	9	14	37
133	5	9	9	18	41
134	5	9	12	12	38
135	5	9	12	14	40
136	5	9	12	18	44
137	5	9	14	14	42
138	5	9	14	18	46
139	5	12	12	12	41
140	5	12	12	14	43
141	5	12	12	18	47
142	5	12	14	14	45
143	5	12	14	18	49
144	5	14	14	14	47
145	7	7	7	7	28
146	7	7	7	9	30
147	7	7	7	12	33
148	7	7	7	14	35
149	7	7	7	18	39
150	7	7	9	9	32
151	7	7	9	12	35
152	7	7	9	14	37
153	7	7	9	18	41
154	7	7	12	12	38
155	7	7	12	14	40
156	7	7	12	18	44
157	7	7	14	14	42
158	7	7	14	18	46
159	7	9	9	9	34
160	7	9	9	12	37

AOEG30KBTA4					
Combination no.	**Unit 1**	**Unit 2**	**Unit 3**	**Unit 4**	**Total**
161	7	9	9	14	39
162	7	9	9	18	43
163	7	9	12	12	40
164	7	9	12	14	42
165	7	9	12	18	46
166	7	9	14	14	44
167	7	9	14	18	48
168	7	12	12	12	43
169	7	12	12	14	45
170	7	12	12	18	49
171	7	12	14	14	47
172	9	9	9	9	36
173	9	9	9	12	39
174	9	9	9	14	41
175	9	9	9	18	45
176	9	9	12	12	42
177	9	9	12	14	44
178	9	9	12	18	48
179	9	9	14	14	46
180	9	12	12	12	45
181	9	12	12	14	47
182	9	12	14	14	49
183	12	12	12	12	48

Numbers in column Unit 1 to 4, and Total indicate the indoor unit capacities as follows:
5: 5,000 Btu/h, 7: 7,000 Btu/h, 9: 9,000 Btu/h, 12: 12,000 Btu/h, 14: 14,000 Btu/h ....

4-5 UNIT MULTI-SPLIT TYPE

■ 5-unit multi-split type

AOEG36KBTA5						
Combination no.	Unit 1	Unit 2	Unit 3	Unit 4	Unit 5	Total
1	5	22	—	—	—	27
2	5	24	—	—	—	29
3	7	24	—	—	—	31
4	9	22	—	—	—	31
5	9	24	—	—	—	33
6	12	22	—	—	—	34
7	12	24	—	—	—	36
8	14	22	—	—	—	36
9	14	24	—	—	—	38
10	18	18	—	—	—	36
11	18	22	—	—	—	40
12	18	24	—	—	—	42
13	22	22	—	—	—	44
14	22	24	—	—	—	46
15	24	24	—	—	—	48
16	5	5	18	—	—	28
17	5	5	22	—	—	32
18	5	5	24	—	—	34
19	5	7	18	—	—	30
20	5	7	22	—	—	34
21	5	7	24	—	—	36
22	5	9	14	—	—	28
23	5	9	18	—	—	32
24	5	9	22	—	—	36
25	5	9	24	—	—	38
26	5	12	12	—	—	29
27	5	12	14	—	—	31
28	5	12	18	—	—	35
29	5	12	22	—	—	39
30	5	12	24	—	—	41
31	5	14	14	—	—	33
32	5	14	18	—	—	37
33	5	14	22	—	—	41
34	5	14	24	—	—	43
35	5	18	18	—	—	41
36	5	18	22	—	—	45
37	5	18	24	—	—	47
38	5	22	22	—	—	49
39	5	22	24	—	—	51
40	5	24	24	—	—	53
41	7	7	14	—	—	28
42	7	7	18	—	—	32
43	7	7	22	—	—	36
44	7	7	24	—	—	38
45	7	9	12	—	—	28
46	7	9	14	—	—	30
47	7	9	18	—	—	34
48	7	9	22	—	—	38
49	7	9	24	—	—	40
50	7	12	12	—	—	31
51	7	12	14	—	—	33
52	7	12	18	—	—	37

AOEG36KBTA5						
Combination no.	Unit 1	Unit 2	Unit 3	Unit 4	Unit 5	Total
53	7	12	22	—	—	41
54	7	12	24	—	—	43
55	7	14	14	—	—	35
56	7	14	18	—	—	39
57	7	14	22	—	—	43
58	7	14	24	—	—	45
59	7	18	18	—	—	43
60	7	18	22	—	—	47
61	7	18	24	—	—	49
62	9	9	9	—	—	27
63	9	9	12	—	—	30
64	9	9	14	—	—	32
65	9	9	18	—	—	36
66	9	9	22	—	—	40
67	9	9	24	—	—	42
68	9	12	12	—	—	33
69	9	12	14	—	—	35
70	9	12	18	—	—	39
71	9	12	22	—	—	43
72	9	12	24	—	—	45
73	9	14	14	—	—	37
74	9	14	18	—	—	41
75	9	14	22	—	—	45
76	9	14	24	—	—	47
77	9	18	18	—	—	45
78	9	18	22	—	—	49
79	9	18	24	—	—	51
80	12	12	12	—	—	36
81	12	12	14	—	—	38
82	12	12	18	—	—	42
83	12	12	22	—	—	46
84	12	12	24	—	—	48
85	12	14	14	—	—	40
86	12	14	18	—	—	44
87	12	14	22	—	—	48
88	12	14	24	—	—	50
89	12	18	18	—	—	48
90	12	18	22	—	—	52
91	12	18	24	—	—	54
92	14	14	14	—	—	42
93	14	14	18	—	—	46
94	14	14	22	—	—	50
95	14	14	24	—	—	52
96	14	18	18	—	—	50
97	18	18	18	—	—	54
98	5	5	5	12	—	27
99	5	5	5	14	—	29
100	5	5	5	18	—	33
101	5	5	5	22	—	37
102	5	5	5	24	—	39
103	5	5	7	12	—	29
104	5	5	7	14	—	31
105	5	5	7	18	—	35
106	5	5	7	22	—	39
107	5	5	7	24	—	41

AOEG36KBTA5						
Combination no.	Unit 1	Unit 2	Unit 3	Unit 4	Unit 5	Total
108	5	5	9	9	—	28
109	5	5	9	12	—	31
110	5	5	9	14	—	33
111	5	5	9	18	—	37
112	5	5	9	22	—	41
113	5	5	9	24	—	43
114	5	5	12	12	—	34
115	5	5	12	14	—	36
116	5	5	12	18	—	40
117	5	5	12	22	—	44
118	5	5	12	24	—	46
119	5	5	14	14	—	38
120	5	5	14	18	—	42
121	5	5	14	22	—	46
122	5	5	14	24	—	48
123	5	5	18	18	—	46
124	5	5	18	22	—	50
125	5	5	18	24	—	52
126	5	7	7	9	—	28
127	5	7	7	12	—	31
128	5	7	7	14	—	33
129	5	7	7	18	—	37
130	5	7	7	22	—	41
131	5	7	7	24	—	43
132	5	7	9	9	—	30
133	5	7	9	12	—	33
134	5	7	9	14	—	35
135	5	7	9	18	—	39
136	5	7	9	22	—	43
137	5	7	9	24	—	45
138	5	7	12	12	—	36
139	5	7	12	14	—	38
140	5	7	12	18	—	42
141	5	7	12	22	—	46
142	5	7	12	24	—	48
143	5	7	14	14	—	40
144	5	7	14	18	—	44
145	5	7	14	22	—	48
146	5	7	14	24	—	50
147	5	7	18	18	—	48
148	5	7	18	22	—	52
149	5	7	18	24	—	54
150	5	9	9	9	—	32
151	5	9	9	12	—	35
152	5	9	9	14	—	37
153	5	9	9	18	—	41
154	5	9	9	22	—	45
155	5	9	9	24	—	47
156	5	9	12	12	—	38
157	5	9	12	14	—	40
158	5	9	12	18	—	44
159	5	9	12	22	—	48
160	5	9	12	24	—	50
161	5	9	14	14	—	42
162	5	9	14	18	—	46

AOEG36KBTA5						
Combination no.	Unit 1	Unit 2	Unit 3	Unit 4	Unit 5	Total
163	5	9	14	22	—	50
164	5	9	14	24	—	52
165	5	9	18	18	—	50
166	5	9	18	22	—	54
167	5	12	12	12	—	41
168	5	12	12	14	—	43
169	5	12	12	18	—	47
170	5	12	12	22	—	51
171	5	12	12	24	—	53
172	5	12	14	14	—	45
173	5	12	14	18	—	49
174	5	12	14	22	—	53
175	5	12	18	18	—	53
176	5	14	14	14	—	47
177	5	14	14	18	—	51
178	7	7	7	7	—	28
179	7	7	7	9	—	30
180	7	7	7	12	—	33
181	7	7	7	14	—	35
182	7	7	7	18	—	39
183	7	7	7	22	—	43
184	7	7	7	24	—	45
185	7	7	9	9	—	32
186	7	7	9	12	—	35
187	7	7	9	14	—	37
188	7	7	9	18	—	41
189	7	7	9	22	—	45
190	7	7	9	24	—	47
191	7	7	12	12	—	38
192	7	7	12	14	—	40
193	7	7	12	18	—	44
194	7	7	12	22	—	48
195	7	7	12	24	—	50
196	7	7	14	14	—	42
197	7	7	14	18	—	46
198	7	7	14	22	—	50
199	7	7	14	24	—	52
200	7	7	18	18	—	50
201	7	9	9	9	—	34
202	7	9	9	12	—	37
203	7	9	9	14	—	39
204	7	9	9	18	—	43
205	7	9	9	22	—	47
206	7	9	9	24	—	49
207	7	9	12	12	—	40
208	7	9	12	14	—	42
209	7	9	12	18	—	46
210	7	9	12	22	—	50
211	7	9	12	24	—	52
212	7	9	14	14	—	44
213	7	9	14	18	—	48
214	7	9	14	22	—	52
215	7	9	14	24	—	54
216	7	9	18	18	—	52
217	7	12	12	12	—	43

AOEG36KBTA5						
Combination no.	Unit 1	Unit 2	Unit 3	Unit 4	Unit 5	Total
218	7	12	12	14	—	45
219	7	12	12	18	—	49
220	7	12	14	14	—	47
221	7	12	14	18	—	51
222	7	14	14	14	—	49
223	7	14	14	18	—	53
224	9	9	9	9	—	36
225	9	9	9	12	—	39
226	9	9	9	14	—	41
227	9	9	9	18	—	45
228	9	9	9	22	—	49
229	9	9	9	24	—	51
230	9	9	12	12	—	42
231	9	9	12	14	—	44
232	9	9	12	18	—	48
233	9	9	12	22	—	52
234	9	9	12	24	—	54
235	9	9	14	14	—	46
236	9	9	14	18	—	50
237	9	9	18	18	—	54
238	9	12	12	12	—	45
239	9	12	12	14	—	47
240	9	12	12	18	—	51
241	9	12	14	14	—	49
242	9	12	14	18	—	53
243	9	14	14	14	—	51
244	12	12	12	12	—	48
245	12	12	12	14	—	50
246	12	12	12	18	—	54
247	12	12	14	14	—	52
248	12	14	14	14	—	54
249	5	5	5	5	7	27
250	5	5	5	5	9	29
251	5	5	5	5	12	32
252	5	5	5	5	14	34
253	5	5	5	5	18	38
254	5	5	5	5	22*	42
255	5	5	5	5	24	44
256	5	5	5	7	7	29
257	5	5	5	7	9	31
258	5	5	5	7	12	34
259	5	5	5	7	14	36
260	5	5	5	7	18	40
261	5	5	5	7	22*	44
262	5	5	5	7	24	46
263	5	5	5	9	9	33
264	5	5	5	9	12	36
265	5	5	5	9	14	38
266	5	5	5	9	18	42
267	5	5	5	9	22	46
268	5	5	5	9	24	48
269	5	5	5	12	12	39
270	5	5	5	12	14	41
271	5	5	5	12	18	45
272	5	5	5	12	22*	49

AOEG36KBTA5						
Combination no.	Unit 1	Unit 2	Unit 3	Unit 4	Unit 5	Total
273	5	5	5	12	24	51
274	5	5	5	14	14	43
275	5	5	5	14	18	47
276	5	5	5	14	22*	51
277	5	5	5	14	24	53
278	5	5	5	18	18	51
279	5	5	7	7	7	31
280	5	5	7	7	9	33
281	5	5	7	7	12	36
282	5	5	7	7	14	38
283	5	5	7	7	18	42
284	5	5	7	7	22*	46
285	5	5	7	7	24	48
286	5	5	7	9	9	35
287	5	5	7	9	12	38
288	5	5	7	9	14	40
289	5	5	7	9	18	44
290	5	5	7	9	22*	48
291	5	5	7	9	24	50
292	5	5	7	12	12	41
293	5	5	7	12	14	43
294	5	5	7	12	18	47
295	5	5	7	12	22*	51
296	5	5	7	12	24	53
297	5	5	7	14	14	45
298	5	5	7	14	18	49
299	5	5	7	14	22*	53
300	5	5	7	18	18	53
301	5	5	9	9	9	37
302	5	5	9	9	12	40
303	5	5	9	9	14	42
304	5	5	9	9	18	46
305	5	5	9	9	22*	50
306	5	5	9	9	24	52
307	5	5	9	12	12	43
308	5	5	9	12	14	45
309	5	5	9	12	18	49
310	5	5	9	12	22*	53
311	5	5	9	14	14	47
312	5	5	9	14	18	51
313	5	5	12	12	12	46
314	5	5	12	12	14	48
315	5	5	12	12	18	52
316	5	5	12	14	14	50
317	5	5	12	14	18	54
318	5	5	14	14	14	52
319	5	7	7	7	7	33
320	5	7	7	7	9	35
321	5	7	7	7	12	38
322	5	7	7	7	14	40
323	5	7	7	7	18	44
324	5	7	7	7	22*	48
325	5	7	7	7	24	50
326	5	7	7	9	9	37
327	5	7	7	9	12	40

AOEG36KBTA5						
Combination no.	Unit 1	Unit 2	Unit 3	Unit 4	Unit 5	Total
328	5	7	7	9	14	42
329	5	7	7	9	18	46
330	5	7	7	9	22*	50
331	5	7	7	9	24	52
332	5	7	7	12	12	43
333	5	7	7	12	14	45
334	5	7	7	12	18	49
335	5	7	7	12	22*	53
336	5	7	7	14	14	47
337	5	7	7	14	18	51
338	5	7	9	9	9	39
339	5	7	9	9	12	42
340	5	7	9	9	14	44
341	5	7	9	9	18	48
342	5	7	9	9	22*	52
343	5	7	9	9	24	54
344	5	7	9	12	12	45
345	5	7	9	12	14	47
346	5	7	9	12	18	51
347	5	7	9	14	14	49
348	5	7	9	14	18	53
349	5	7	12	12	12	48
350	5	7	12	12	14	50
351	5	7	12	12	18	54
352	5	7	12	14	14	52
353	5	7	14	14	14	54
354	5	9	9	9	9	41
355	5	9	9	9	12	44
356	5	9	9	9	14	46
357	5	9	9	9	18	50
358	5	9	9	9	22*	54
359	5	9	9	12	12	47
360	5	9	9	12	14	49
361	5	9	9	12	18	53
362	5	9	9	14	14	51
363	5	9	12	12	12	50
364	5	9	12	12	14	52
365	5	9	12	14	14	54
366	5	12	12	12	12	53
367	7	7	7	7	7	35
368	7	7	7	7	9	37
369	7	7	7	7	12	40
370	7	7	7	7	14	42
371	7	7	7	7	18	46
372	7	7	7	7	22*	50
373	7	7	7	7	24	52
374	7	7	7	9	9	39
375	7	7	7	9	12	42
376	7	7	7	9	14	44
377	7	7	7	9	18	48
378	7	7	7	9	22*	52
379	7	7	7	9	24	54
380	7	7	7	12	12	45
381	7	7	7	12	14	47
382	7	7	7	12	18	51

AOEG36KBTA5						
Combination no.	Unit 1	Unit 2	Unit 3	Unit 4	Unit 5	Total
383	7	7	7	14	14	49
384	7	7	7	14	18	53
385	7	7	9	9	9	41
386	7	7	9	9	12	44
387	7	7	9	9	14	46
388	7	7	9	9	18	50
389	7	7	9	9	22*	54
390	7	7	9	12	12	47
391	7	7	9	12	14	49
392	7	7	9	12	18	53
393	7	7	9	14	14	51
394	7	7	12	12	12	50
395	7	7	12	12	14	52
396	7	7	12	14	14	54
397	7	9	9	9	9	43
398	7	9	9	9	12	46
399	7	9	9	9	14	48
400	7	9	9	9	18	52
401	7	9	9	12	12	49
402	7	9	9	12	14	51
403	7	9	9	14	14	53
404	7	9	12	12	12	52
405	7	9	12	12	14	54
406	9	9	9	9	9	45
407	9	9	9	9	12	48
408	9	9	9	9	14	50
409	9	9	9	9	18	54
410	9	9	9	12	12	51
411	9	9	9	12	14	53
412	9	9	12	12	12	54

Numbers in column Unit 1 to 5 and Total indicate the indoor unit capacities as follows:
5: 5,000 Btu/h, 7: 7,000 Btu/h, 9: 9,000 Btu/h, 12: 12,000 Btu/h, 14: 14,000 Btu/h ....
*: As for the 22 model, wall-mounted type indoor unit is only connectable.

2. Specifications

2-1. Compact cassette type

Model name					AUXG07KVLA	AUXG09KVLA	AUXG12KVLA	AUXG14KVLA
Power supply					1Ø 230 V~ 50 Hz			
Available voltage range					198—264 V			
Capacity				kW class	2.0	2.5	3.5	4.0
Input power				W	18		23	28
Running current				A	0.15		0.19	0.22
Fan	Airflow rate	Cooling	HIGH	m^3/h	540		610	680
			MED		490		530	580
			LOW		440		470	490
			QUIET		390		410	410
		Heating	HIGH		540		610	790
			MED		490		530	680
			LOW		440		470	580
			QUIET		390		410	450
	Type × Qty				Turbo fan × 1			
	Motor output			W	54			
Sound pressure level*		Cooling	HIGH	dB (A)	33		37	38
			MED		31		34	35
			LOW		29		31	32
			QUIET		27		28	29
		Heating	HIGH		34		37	43
			MED		32		34	38
			LOW		29		31	34
			QUIET		27		29	30
Sound power level		Cooling		dB (A)	46		49	50
		Heating			47		49	55
Heat exchanger type		Dimensions (H × W × D)		mm	Main 1: 210 × 1,310 × 13.3 Main 2: 210 × 1,250 × 13.3			
		Fin pitch		mm	Main 1: 1.2 Main 2: 1.2			
		Rows × Stages			Main 1: 1 × 10 Main 2: 1 × 10			
		Pipe type			Copper tube			
		Fin type			Aluminum			
Dimensions (H × W × D)		Net		mm	245 × 570 × 570			
		Gross			265 × 730 × 625			
Weight		Net		kg	15			
		Gross			19			
Connection pipe		Size	Liquid	mm (in)	Ø6.35 (Ø1/4)			
			Gas		Ø9.52 (Ø3/8)			
		Method			Flare			
Drain hose		Material			Polyvinyl chloride			
		Tip diameter		mm	Ø25 (I.D.), Ø32 (O.D.)			
Operation range		Cooling		°C	18 to 32			
				%RH	80 or less			
		Heating		°C	16 to 30			
Cassette grille (Grid type: Option)		Model name			UTG-UFYF-W			
		Material			Polystyrene			
		Color			White Approximate color of Munsell 9PB 9.1/0.2			
		Dimensions (H × W × D)	Net	mm	49 × 620 × 620			
			Gross		120 × 765 × 755			
		Weight	Net	kg	2.3			
			Gross		4.5			

NOTES:

- The protective function might work when using it outside the operation range.
- *: Sound pressure level:
  - These are the measured values in the manufacturer's anechoic chamber.
  - Because of the surrounding sound environment, the sound levels measured in actual installation conditions might be higher than the specified values here.

Model name					AUXG18KVLA	AUXG22KVLA
Power supply					1Ø 230 V~ 50 Hz	
Available voltage range					198—264 V	
Capacity				kW class	5.0	6.0
Input power				W	39	84
Running current				A	0.30	0.62
Fan	Airflow rate	Cooling	HIGH	m^3/h	680	830
			MED		580	740
			LOW		490	600
			QUIET		410	450
		Heating	HIGH		790	860
			MED		680	760
			LOW		580	700
			QUIET		450	530
	Type × Qty				Turbo fan × 1	
	Motor output			W	54	
Sound pressure level*	Cooling	HIGH		dB (A)	38	44
		MED			35	42
		LOW			32	36
		QUIET			29	30
	Heating	HIGH			43	45
		MED			38	43
		LOW			34	40
		QUIET			30	33
Sound power level	Cooling			dB (A)	50	56
	Heating				55	57
Heat exchanger type	Dimensions (H × W × D)			mm	Main 1: 210 × 1,310 × 13.3 Main 2: 210 × 1,250 × 13.3	Main 1: 210 × 1,360 × 13.3 Main 2: 210 × 1,295 × 13.3 Main 3: 210 × 1,235 × 13.3
	Fin pitch				Main 1: 1.2 Main 2: 1.2	Main 1: 1.45 Main 2: 1.45 Main 3: 1.45
	Rows × Stages				Main 1: 1 × 10 Main 2: 1 × 10	Main 1: 1 × 10 Main 2: 1 × 10 Main 3: 1 × 10
	Pipe type				Copper tube	
	Fin type				Aluminum	
Dimensions (H × W × D)	Net			mm	245 × 570 × 570	
	Gross				265 × 730 × 625	
Weight	Net			kg	15	16
	Gross				19	20
Connection pipe	Size	Liquid		mm (in)	Ø6.35 (Ø1/4)	
		Gas			Ø12.70 (Ø1/2)	
	Method				Flare	
Drain hose	Material				Polyvinyl chloride	
	Tip diameter			mm	Ø25 (I.D.), Ø32 (O.D.)	
Operation range	Cooling			°C	18 to 32	
				%RH	80 or less	
	Heating			°C	16 to 30	
Cassette grille (Grid type: Option)	Model name				UTG-UFYF-W	
	Material				Polystyrene	
	Color				White Approximate color of Munsell 9PB 9.1/0.2	
	Dimensions (H × W × D)	Net		mm	49 × 620 × 620	
		Gross			120 × 765 × 755	
	Weight	Net		kg	2.3	
		Gross			4.5	

NOTES:

- The protective function might work when using it outside the operation range.
- *: Sound pressure level:
  - These are the measured values in the manufacturer's anechoic chamber.
  - Because of the surrounding sound environment, the sound levels measured in actual installation conditions might be higher than the specified values here.

2-2. Mini duct type

Model name					ARXG07KSLAP	ARXG09KSLAP	ARXG12KSLAP	ARXG14KSLAP
Power supply					1Ø 230 V~ 50 Hz			
Available voltage range					198—264 V			
Capacity				kW class	2.0	2.5	3.5	4.0
Input power	Fan		HIGH	W	33	40	47	72
			MED		23	23	26	44
			LOW		20	20	22	30
			QUIET		18	18	18	18
Running current				A	0.29	0.33	0.38	0.58
Fan	Airflow rate	Cooling	HIGH	m^3/h	550	600	650	800
			MED		440	450	490	640
			LOW		390	400	430	530
			QUIET		360	360	360	360
		Heating	HIGH		550	600	650	800
			MED		440	450	490	640
			LOW		390	400	430	530
			QUIET		360	360	360	360
	Type × Qty				Sirocco fan × 2			
	Motor output			W	75			
Recommended static pressure				Pa	0 to 30			0 to 50
Sound pressure level*		Cooling	HIGH	dB (A)	29		31	35
			MED		26		27	30
			LOW		24		25	27
			QUIET		23		23	23
		Heating	HIGH		29		31	35
			MED		26		27	30
			LOW		24		25	27
			QUIET		23			
Sound power level		Cooling		dB (A)	52	54	55	60
		Heating			53	56	57	62
Heat exchanger type		Dimensions (H × W × D)		mm	336 × 490 × 26.6			
		Fin pitch		mm	1.3			
		Rows × Stages			2 × 16			
		Pipe type			Copper tube			
		Fin type			Aluminum			
Enclosure		Material			Steel sheet			
		Color			—			
Dimensions (H × W × D)		Net		mm	198 × 700 × 450			
		Gross			250 × 930 × 580			
Weight		Net		kg	15.5			
		Gross			19.0			
Connection pipe		Size	Liquid	mm (in)	Ø6.35 (Ø1/4)			
			Gas		Ø9.52 (Ø3/8)			
		Method			Flare			
Drain hose		Material			Hard Polyvinyl chloride			
		Tip diameter		mm	Ø25 (I.D.), Ø32 (O.D.)			
Operation range		Cooling		°C	18 to 32			
				%RH	80 or less			
		Heating		°C	16 to 30			

NOTES:

- Values mentioned in the table are based on the following conditions:
  - Static pressure: 07-12 models: 10 Pa, 14 model: 15 Pa
- The protective function might work when using it outside the operation range.
- *: Sound pressure level:
  - These are the measured values in the manufacturer's anechoic chamber.
  - Because of the surrounding sound environment, the sound levels measured in actual installation conditions might be higher than the specified values here.

Model name					ARXG18KSLAP
Power supply					1Ø 230 V~ 50 Hz
Available voltage range					198—264 V
Capacity				kW class	5.0
Input power	Fan	HIGH		W	63
		MED			38
		LOW			22
		QUIET			19
Running current				A	0.49
Fan	Airflow rate	Cooling	HIGH	m^3/h	940
			MED		750
			LOW		540
			QUIET		480
		Heating	HIGH		940
			MED		750
			LOW		540
			QUIET		480
	Type × Qty				Sirocco fan × 3
	Motor output			W	80
Recommended static pressure				Pa	0 to 50
Sound pressure level*		Cooling	HIGH	dB (A)	33
			MED		29
			LOW		26
			QUIET		23
		Heating	HIGH		33
			MED		29
			LOW		26
			QUIET		23
Sound power level		Cooling		dB (A)	58
		Heating			59
Heat exchanger type		Dimensions (H × W × D)		mm	336 × 690 × 26.6
		Fin pitch			1.30
		Rows × Stages			2 × 16
		Pipe type			Copper tube
		Fin type			Aluminum
Enclosure		Material			Steel sheet
		Color			—
Dimensions (H × W × D)		Net		mm	198 × 900 × 450
		Gross			250 × 1,130 × 580
Weight		Net		kg	18.5
		Gross			23.0
Connection pipe		Size	Liquid	mm (in)	Ø6.35 (Ø1/4)
			Gas		Ø12.7 (Ø1/2)
		Method			Flare
Drain hose		Material			Polyvinyl chloride
		Tip diameter		mm	Ø25 (I.D.), Ø32 (O.D.)
Operation range		Cooling		°C	18 to 32
				%RH	80 or less
		Heating		°C	16 to 30

NOTES:

- Values mentioned in the table are based on the following conditions:
  - Static pressure: 15 Pa
- The protective function might work when using it outside the operation range.
- *: Sound pressure level:
  - These are the measured values in the manufacturer's anechoic chamber.
  - Because of the surrounding sound environment, the sound levels measured in actual installation conditions might be higher than the specified values here.

2-3. Slim duct type

Model name					ARXG07KLLAP	ARXG09KLLAP	ARXG12KLLAP	ARXG14KLLAP
Power supply					1Ø 230 V~ 50 Hz			
Available voltage range					198—264 V			
Capacity				kW class	2.0	2.5	3.5	4.0
Input power				W	33	49	58	76
Running current				A	0.33	0.30	0.35	0.51
Fan	Airflow rate	Cooling	HIGH	m^3/h	550	600	650	800
			MED		490	550	600	700
			LOW		470	500	550	600
			QUIET		440	450	480	480
		Heating	HIGH		550	600	650	800
			MED		490	550	600	700
			LOW		470	500	550	600
			QUIET		440	450	480	480
	Type × Qty				Sirocco fan × 2			
	Motor output			W	80	81		
Recommended static pressure				Pa	0 to 90			
Sound pressure level*		Cooling	HIGH	dB (A)	28		29	32
			MED		26	27	28	30
			LOW		25	26	27	28
			QUIET		24	25	26	26
		Heating	HIGH		28		29	32
			MED		26		28	30
			LOW		25		27	28
			QUIET		24			25
Sound power level		Cooling		dB (A)	57		58	60
		Heating			57		58	60
Heat exchanger type		Dimensions (H × W × D)		mm	294 × 500 × 26.6	294 × 500 × 39.9		
		Fin pitch		mm	1.3			
		Rows × Stages			2 × 14	3 × 14		
		Pipe type			Copper tube			
		Fin type			Aluminum			
Enclosure	Material				Steel sheet			
	Color				—			
Dimensions (H × W × D)	Net			mm	198 × 700 × 620			
	Gross				276 × 968 × 772			
Weight	Net			kg	16	17		
	Gross				21	22		
Connection pipe	Size	Liquid		mm (in)	Ø6.35 (Ø1/4)			
		Gas			Ø9.52 (Ø3/8)			
	Method				Flare			
Drain hose	Material				Polyvinyl chloride			
	Tip diameter			mm	Ø25 (I.D.), Ø32 (O.D.)			
Operation range		Cooling		°C	18 to 32			
				%RH	80 or less			
		Heating		°C	16 to 30			

NOTES:

- Values mentioned in the table are based on the following conditions:
  - Static pressure: 25 Pa
- The protective function might work when using it outside the operation range.
- *: Sound pressure level:
  - These are the measured values in the manufacturer's anechoic chamber.
  - Because of the surrounding sound environment, the sound levels measured in actual installation conditions might be higher than the specified values here.

Model name					ARXG18KLLAP
Power supply					1Ø 230 V~ 50 Hz
Available voltage range					198—264 V
Capacity				kW class	5.0
Input power				W	73
Running current				A	0.44
Fan	Airflow rate	Cooling	HIGH	m^3/h	940
			MED		880
			LOW		820
			QUIET		750
		Heating	HIGH		940
			MED		880
			LOW		820
			QUIET		750
	Type × Qty				Sirocco fan × 3
	Motor output			W	81
Recommended static pressure				Pa	0 to 90
Sound pressure level*		Cooling	HIGH	dB (A)	32
			MED		30
			LOW		29
			QUIET		27
		Heating	HIGH		32
			MED		30
			LOW		29
			QUIET		27
Sound power level		Cooling		dB (A)	58
		Heating			58
Heat exchanger type		Dimensions (H × W × D)		mm	294 × 700 × 39.9
		Fin pitch		mm	1.3
		Rows × Stages			3 × 14
		Pipe type			Copper tube
		Fin type			Aluminum
Enclosure	Material				Steel sheet
	Color				—
Dimensions (H × W × D)	Net			mm	198 × 900 × 620
	Gross				276 × 1,168 × 772
Weight	Net			kg	20
	Gross				26
Connection pipe	Size	Liquid		mm (in)	Ø6.35 (Ø1/4)
		Gas			Ø12.70 (Ø1/2)
	Method				Flare
Drain hose	Material				Polyvinyl chloride
	Tip diameter			mm	Ø25 (I.D.), Ø32 (O.D.)
Operation range		Cooling		°C	18 to 32
				%RH	80 or less
		Heating		°C	16 to 30

NOTES:

- Values mentioned in the table are based on the following conditions:
  - Static pressure: 25 Pa
- The protective function might work when using it outside the operation range.
- *: Sound pressure level:
  - These are the measured values in the manufacturer's anechoic chamber.
  - Because of the surrounding sound environment, the sound levels measured in actual installation conditions might be higher than the specified values here.

2-4. Medium static pressure duct type

■ Model: ARXG22KMLB

Model name					ARXG22KMLB
Power supply					1Ø 230 V~ 50 Hz
Available voltage range					198—264 V
Capacity				kW class	6.0
Input power				W	94
Running current				A	0.50
Fan	Airflow rate	Cooling	HIGH	m^3/h	1,100
			MED		910
			LOW		750
			QUIET		580
		Heating	HIGH		1,100
			MED		910
			LOW		750
			QUIET		580
	Type × Qty				Sirocco fan × 2
	Motor output			W	106
Recommended static pressure				Pa	30 to 150
Sound pressure level*		Cooling	HIGH	dB (A)	31
			MED		29
			LOW		27
			QUIET		25
		Heating	HIGH		31
			MED		29
			LOW		27
			QUIET		25
Sound power level		Cooling		dB (A)	60
		Heating			62
Heat exchanger type		Dimensions (H × W × D)		mm	294 × 1,000 × 39.9
		Fin pitch		mm	1.40
		Rows × Stages			3 × 14
		Pipe type			Copper tube
		Fin type			Aluminum
Enclosure	Material				Steel sheet
	Color				—
Dimensions (H × W × D)	Net			mm	270 × 1,135 × 700
	Gross				300 × 1,320 × 790
Weight	Net			kg	35
	Gross				43
Connection pipe	Size	Liquid		mm (in)	Ø6.35 (Ø1/4)
		Gas			Ø12.70 (Ø1/2)
	Method				Flare
Operation range		Cooling		°C	18 to 32
				%RH	80 or less
		Heating		°C	16 to 30
Drain hose	Material				Steel
	Tip diameter			mm	Ø 35.7 (I.D.), Ø 38.1 (O.D.)

NOTES:

- Values mentioned in the table are based on the following conditions:
  - Static pressure: 35 Pa
- The protective function might work when using it outside the operation range.
- *: Sound pressure level:
  - These are the measured values in the manufacturer's anechoic chamber.
  - Because of the surrounding sound environment, the sound levels measured in actual installation conditions might be higher than the specified values here.

■ Models: ARXH12–22KMTAP

Model name					ARXH12KMTAP	ARXH14KMTAP	ARXH18KMTAP
Power supply					230 V~ 50 Hz		
Available voltage range					198—264 V		
Capacity				kW class	3.5	4.0	5.0
Input power				W	46	70	75
Running current				A	0.34	0.49	0.52
Fan	Airflow rate	Cooling	HIGH	m^3/h	650	800	840
			MED		520	640	720
			LOW		460	560	630
			QUIET		390	480	540
		Heating	HIGH		650	800	840
			MED		520	640	720
			LOW		460	560	630
			QUIET		390	480	540
	Type × Qty				Sirocco fan × 1		
	Motor output			W	150		
Static pressure range				Pa	30 to 150		
Sound pressure level*1		Cooling	HIGH	dB (A)	29	32	33
			MED		27	29	30
			LOW		25	27	28
			QUIET		23	25	26
		Heating	HIGH		29	32	33
			MED		27	29	30
			LOW		25	27	28
			QUIET		23	25	26
Sound power level		Cooling	HIGH	dB (A)	58	59	60
		Heating			58	59	60
Heat exchanger		Dimensions (H × W × D)		mm	336 × 490 × 39.9		
		Fin pitch			1.4		
		Rows × Stages			3 × 16		
		Pipe type			Copper tube		
		Fin type			Aluminum		
Enclosure		Material			Steel sheet		
		Color			—		
Dimensions (H × W × D)		Net		mm	240 × 700 × 700		
		Gross			334 × 926 × 863		
Weight		Net		kg	24		
		Gross			29		
Connection pipe		Size	Liquid	mm (in)	Ø6.35 (Ø1/4)		
			Gas		Ø9.52 (Ø3/8)		Ø12.70 (Ø1/2)
		Method			Flare		
Drain port		Material			Polyvinyl chloride		
		Tip diameter		mm	Ø26 (I.D.), Ø32 (O.D.)		
Drain hose		Material			Polyvinyl chloride		
		Tip diameter		mm	Ø25 (I.D.), Ø32 (O.D.)		
Operation range		Cooling		°C	18 to 32		
				%RH	80 or less		
		Heating		°C	16 to 30		
Remote controller (Option)					Wireless, Wired, Mobile app*2 [FGLair™, AIRSTAGE Mobile]		

NOTES:

- Values mentioned in the table are based on the following conditions:
  - Static pressure: 40 Pa
- The protective function might work when using it outside the operation range.
- *1: Sound pressure level:
  - Measured values in manufacturer's anechoic chamber.
  - Because of the surrounding sound environment, the sound levels measured in actual installation conditions might be higher than the specified values here.
- *2: Available on Google Play™ store or on App Store®. Optional WLAN Adapter is also required. For details, refer to the setting manual.
- This data is based on EN 14511 standard.

Model name					ARXH22KMTAP
Power supply					1Ø 230 V~ 50 Hz
Available voltage range					198—264 V
Capacity				kW class	6.0
Input power				W	79
Running current				A	0.50
Fan	Airflow rate	Cooling	HIGH	m^3/h	1,150
			MED		920
			LOW		800
			QUIET		700
		Heating	HIGH		1,150
			MED		920
			LOW		800
			QUIET		700
	Type × Qty				Sirocco fan × 2
	Motor output			W	197
Static pressure range				Pa	30 to 150
Sound pressure level*1		Cooling	HIGH	dB (A)	32
			MED		28
			LOW		25
			QUIET		24
		Heating	HIGH		32
			MED		28
			LOW		25
			QUIET		24
Sound power level		Cooling	HIGH	dB (A)	58
		Heating			58
Heat exchanger		Dimensions (H × W × D)		mm	336 × 790 × 39.9
		Fin pitch			1.4
		Rows × Stages			3 × 16
		Pipe type			Copper tube
		Fin type			Aluminum
Enclosure		Material			Steel sheet
		Color			—
Dimensions (H × W × D)		Net		mm	240 × 1,000 × 700
		Gross			334 × 1,226 × 863
Weight		Net		kg	31
		Gross			37
Connection pipe		Size	Liquid	mm (in)	Ø6.35 (Ø1/4)
			Gas		Ø12.70 (Ø1/2)
		Method			Flare
Drain port		Material			Polyvinyl chloride
		Tip diameter		mm	Ø26 (I.D.), Ø32 (O.D.)
Drain hose		Material			Polyvinyl chloride
		Tip diameter		mm	Ø25 (I.D.), Ø32 (O.D.)
Operation range		Cooling		°C	18 to 32
				%RH	80 or less
		Heating		°C	16 to 30
Remote controller (Option)					Wireless, Wired, Mobile app*2 [FGLair™, AIRSTAGE Mobile]

NOTES:

- Values mentioned in the table are based on the following conditions:
  - Static pressure: 40 Pa
- The protective function might work when using it outside the operation range.
- *1: Sound pressure level:
  - Measured values in manufacturer's anechoic chamber.
  - Because of the surrounding sound environment, the sound levels measured in actual installation conditions might be higher than the specified values here.
- *2: Available on Google Play™ store or on App Store®. Optional WLAN Adapter is also required. For details, refer to the setting manual.
- This data is based on EN 14511 standard.

2-5. Wall mounted type

Model name					ASEH07KMCG ASEH07KMCG-B	ASEH09KMCG ASEH09KMCG-B	ASEH12KMCG ASEH12KMCG-B	ASEH14KMCG ASEH14KMCG-B
Power supply					1Ø 230 V~ 50 Hz			
Available voltage range					198—264 V			
Capacity				kW class	2.0	2.5	3.5	4.0
Input power				W	23	27		33
Running current				A	0.20	0.24		0.30
Fan	Airflow rate	Cooling	HIGH	m^3/h	650	700		770
			MED		540	560		600
			LOW		430			450
			QUIET		320			310
		Heating	HIGH		720	750	780	820
			MED		580	610	640	660
			LOW		460	470	520	
			QUIET		330			340
	Type × Qty				Crossflow fan × 1			
	Motor output			W	27			
Sound pressure level*1		Cooling	HIGH	dB (A)	38	40		43
			MED		33	34	35	36
			LOW		29		30	
			QUIET		21			
		Heating	HIGH		41	42		44
			MED		35	36	38	39
			LOW		31		33	
			QUIET		22			24
Sound power level		Cooling		dB (A)	54	55		57
		Heating			56	57	58	59
Heat exchanger type		Dimensions (H × W × D)		mm	Main 1: 210 × 670 × 26.6 Main 2: 112 × 670 × 20.0			Main 1: 210 × 670 × 26.6 Main 2: 112 × 670 × 20.0 Sub: 84 × 670 × 13.3
		Fin pitch			Main 1: 1.2 Main 2: 1.1			Main 1: 1.2 Main 2: 1.1 Sub: 1.4
		Rows × Stages			Main 1: 2 × 10 Main 2: 2 × 7			Main 1: 2 × 10 Main 2: 2 × 7 Sub: 1 × 4
		Pipe type			Copper tube			
		Fin type			Aluminum			
Enclosure		Material			Polystyrene			
		Color			KMCG: White + Pearl white (painted) Approximate color of Munsell N 9.25/			
					KMCG-B: Soft black Approximate color of Munsell N3/			
Dimensions (H × W × D)		Net		mm	270 × 834 × 222			
		Gross			KMCG: 277 × 914 × 332 KMCG-B: 284 × 925 × 341			
Weight		Net		kg	10.0			
		Gross			KMCG: 12.5 KMCG-B: 13.5			KMCG: 13.0 KMCG-B: 13.5
Connection pipe		Size	Liquid	mm (in)	Ø6.35 (Ø1/4)			
			Gas		Ø9.52 (Ø3/8)			
		Method			Flare			
Drain hose		Material			Polypropylene + High-density polyethylene			
		Tip diameter		mm	Ø13.8 (I.D.), Ø15.0 to Ø16.8 (O.D.)			
Operation range		Cooling		°C	18 to 32			
				%RH	80 or less			
		Heating		°C	16 to 30			
Remote controller type					Wireless (Option: Wired, Mobile app*2 [AIRSTAGE Mobile])			

NOTES:

- The protective function might work when using it outside the operation range.
- *1: Sound pressure level:
  - These are the measured values in the manufacturer's anechoic chamber.
  - Because of the surrounding sound environment, the sound levels measured in actual installation conditions might be higher than the specified values here.
- *2: Available on Google Play™ store or on App Store®.

Model name					ASEG07KETF ASEG07KETF-B	ASEG09KETF ASEG09KETF-B	ASEG12KETF ASEG12KETF-B	ASEG14KETF ASEG14KETF-B
Power supply					1Ø 230 V~ 50 Hz			
Available voltage range					198—264 V			
Capacity				kW class	2.0	2.5	3.5	4.0
Input power				W	23	27	27	33
Running current				A	0.20	0.24	0.24	0.30
Fan	Airflow rate	Cooling	HIGH	m^3/h	650	700		770
			MED		540	560		600
			LOW		430			450
			QUIET		270			280
		Heating	HIGH		720	750	770	800
			MED		580	610	640	660
			LOW		460	470	520	
			QUIET		330			340
	Type × Qty				Crossflow fan × 1			
	Motor output			W	30			49
Sound pressure level*1		Cooling	HIGH	dB (A)	38	40		43
			MED		33	34	35	36
			LOW		29		30	
			QUIET		21			
		Heating	HIGH		41	42		44
			MED		35	36	38	39
			LOW		31		33	
			QUIET		22			24
Sound power level		Cooling		dB (A)	54	55		57
		Heating			56	57	58	59
Heat exchanger type		Dimensions (H × W × D)		mm	Main 1: 210 × 670 × 26.6 Main 2: 112 × 670 × 20.0			Main 1: 210 × 670 × 26.6 Main 2: 112 × 670 × 20.0 Sub: 84 × 670 × 13.3
		Fin pitch		mm	Main 1: 1.2 Main 2: 1.1			Main 1: 1.2 Main 2: 1.1 Sub: 1.4
		Rows × Stages			Main 1: 2 × 10 Main 2: 2 × 7			Main 1: 2 × 10 Main 2: 2 × 7 Sub: 1 × 4
		Pipe type			Copper tube			
		Fin type			Aluminum			
Enclosure		Material			Polystyrene			
		Color			KETF: White + Pearl white (painted) Approximate color of Munsell N 9.25/			
					KETF-B: Dark gray + Silver (painted) Approximate color of Munsell 0.5P 3.5/0.2			
Dimensions (H × W × D)		Net		mm	295 × 950 × 230			
		Gross			284 × 1,027 × 357			
Weight		Net		kg	11.0			11.5
		Gross			14.5			15.0
Connection pipe		Size	Liquid	mm (in)	Ø6.35 (Ø1/4)			
			Gas		Ø9.52 (Ø3/8)			
		Method			Flare			
Drain hose		Material			Polypropylene + High-density polyethylene			
		Tip diameter		mm	Ø13.8 (I.D.), Ø15.0 to Ø16.8 (O.D.)			
Operation range		Cooling		°C	18 to 32			
				%RH	80 or less			
		Heating		°C	16 to 30			
Remote controller type					Wireless (Option: Wired, Mobile app*2 [AIRSTAGE Mobile])			

NOTES:

- The protective function might work when using it outside the operation range.
- *1: Sound pressure level:
  - These are the measured values in the manufacturer's anechoic chamber.
  - Because of the surrounding sound environment, the sound levels measured in actual installation conditions might be higher than the specified values here.
- *2: Available on Google Play™ store or on App Store®.

Model name					ASEH07KGTG	ASEH09KGTG	ASEH12KGTG	ASEH14KGTG
Power supply					1Ø 230 V~ 50 Hz			
Available voltage range					198—264 V			
Capacity				kW class	2.0	2.5	3.5	4.0
Input power				W	23	27		33
Running current				A	0.20	0.24		0.29
Fan	Airflow rate	Cooling	HIGH	m^3/h	650	700		770
			MED		540	560		600
			LOW		430			450
			QUIET		270			280
		Heating	HIGH		720	750	770	800
			MED		580	610	640	660
			LOW		460	470	520	
			QUIET		330			340
	Type × Qty				Crossflow fan × 1			
	Motor output			W	30		49	
Sound pressure level*1		Cooling	HIGH	dB (A)	38	40		43
			MED		33	34	35	36
			LOW		29		30	
			QUIET		21			
		Heating	HIGH		41	42		44
			MED		35	36	38	39
			LOW		31		33	
			QUIET		22			24
Sound power level		Cooling		dB (A)	54	55	56	57
		Heating			56	57	58	59
Heat exchanger type		Dimensions (H × W × D)		mm	Main 1: 210 × 670 × 26.6 Main 2: 112 × 670 × 20.0		Main 1: 210 × 670 × 26.6 Main 2: 112 × 670 × 20.0 Sub: 84 × 670 × 13.3	
		Fin pitch		mm	Main 1: 1.2 Main 2: 1.1		Main 1: 1.2 Main 2: 1.1 Sub: 1.4	
		Rows × Stages			Main 1: 2 × 10 Main 2: 2 × 7		Main 1: 2 × 10 Main 2: 2 × 7 Sub: 1 × 4	
		Pipe type			Copper tube			
		Fin type			Aluminum			
Enclosure		Material			Polystyrene			
		Color			White + Pearl white (painted) Approximate color of Munsell N 9.25/			
Dimensions (H × W × D)		Net		mm	270 × 834 × 215			
		Gross			277 × 914 × 332			
Weight		Net		kg	10.0			
		Gross			12.5		13.0	
Connection pipe		Size	Liquid	mm (in)	Ø6.35 (Ø1/4)			
			Gas		Ø9.52 (Ø3/8)			
		Method			Flare			
Drain hose		Material			Polypropylene + High-density polyethylene			
		Tip diameter		mm	Ø13.8 (I.D.), Ø15.0 to Ø16.8 (O.D.)			
Operation range		Cooling		°C	18 to 32			
				%RH	80 or less			
		Heating		°C	16 to 30			
Remote controller type					Wireless (Option: Wired, Mobile app*2 [AIRSTAGE Mobile])			

NOTES:

- The protective function might work when using it outside the operation range.
- *1: Sound pressure level:
  - These are the measured values in the manufacturer's anechoic chamber.
  - Because of the surrounding sound environment, the sound levels measured in actual installation conditions might be higher than the specified values here.
- *2: Available on Google Play™ store or on App Store®.

Model name					ASEH05KNCA	ASEH07KNCA	ASEH09KNCA	ASEH12KNCA
Power supply					1Ø 230 V~ 50 Hz			
Available voltage range					198—264 V			
Capacity				kW class	1.5	2.0	2.5	3.5
Input power				W	12	13	21	22
Running current				A	0.11	0.12	0.19	0.20
Fan	Airflow rate	Cooling	HIGH	m^3/h	500	530	640	660
			MED		450	460	500	520
			LOW		390			440
			QUIET		250			
		Heating	HIGH		500	530	640	660
			MED		450	460	500	520
			LOW		420			440
			QUIET		280			
	Type × Qty				Crossflow fan × 1			
	Motor output			W	27			
Sound pressure level*1		Cooling	HIGH	dB (A)	34	36	41	42
			MED		33		35	36
			LOW		29			32
			QUIET		21			
		Heating	HIGH		34	36	41	42
			MED		32	33	34	35
			LOW		30			31
			QUIET		22			
Sound power level		Cooling		dB (A)	50	51	56	57
		Heating			50	51	56	57
Heat exchanger type		Dimensions (H × W × D)		mm	Main 1: 210 × 600 × 26.6 Main 2: 112 × 600 × 20.0			
		Fin pitch		mm	Main 1: 1.2 Main 2: 1.1			
		Rows × Stages			Main 1: 2 × 10 Main 2: 2 × 7			
		Pipe type			Copper tube			
		Fin type			Aluminum			
Enclosure		Material			Polystyrene			
		Color			White + Pearl white (painted) Approximate color of Munsell N 9.25/			
Dimensions (H × W × D)		Net		mm	270 × 784 × 222			
		Gross			279 × 864 × 334			
Weight		Net		kg	9.0			
		Gross			12.0			
Connection pipe		Size	Liquid	mm (in)	Ø6.35 (Ø1/4)			
			Gas		Ø9.52 (Ø3/8)			
		Method			Flare			
Drain hose		Material			Polypropylene + High-density polyethylene			
		Tip diameter		mm	Ø13.8 (I.D.), Ø15.0 to Ø16.8 (O.D.)			
Operation range		Cooling		°C	18 to 32			
				%RH	80 or less			
		Heating		°C	16 to 30			
Remote controller type					Wireless (Option: Mobile app*2 [AIRSTAGE Mobile])			

NOTES:

- The protective function might work when using it outside the operation range.
- *1: Sound pressure level:
  - These are the measured values in the manufacturer's anechoic chamber.
  - Because of the surrounding sound environment, the sound levels measured in actual installation conditions might be higher than the specified values here.
- *2: Available on Google Play™ store or on App Store®.

Model name					ASEG18KMTE	ASEG22KMTE	ASEG24KMTE
Power supply					1Ø 230 V~ 50 Hz		
Available voltage range					198—264 V		
Capacity				kW class	5.0	6.0	7.0
Input power				W	37.5	47.0	61.6
Running current				A	0.35	0.39	0.44
Fan	Airflow rate	Cooling	HIGH	m^3/h	980	1,060	1,170
			MED		810		850
			LOW		640		
			QUIET		510		
		Heating	HIGH		1,020	1,060	1,170
			MED		850		
			LOW		640		
			QUIET		510		
	Type × Qty				Crossflow fan × 1		
	Motor output			W	59		
Sound pressure level*1		Cooling	HIGH	dB (A)	45	48	49
			MED		40		
			LOW		35		
			QUIET		29		
		Heating	HIGH		46	48	49
			MED		40		
			LOW		35		
			QUIET		29		
Sound power level		Cooling		dB (A)	60	62	65
		Heating			61	62	65
Heat exchanger type		Dimensions (H × W × D)		mm	Main 1: 210 × 798 × 26.6 Main 2: 135 × 798 × 20.0 Sub 1: 84 × 798 × 13.3 Sub 2: 84 × 798 × 13.3		
		Fin pitch		mm	Main 1: 1.2 Main 2: 1.1 Sub 1: 1.4 Sub 2: 1.4		
		Rows × Stages			Main 1: 2 × 10 Main 2: 2 × 8 Sub 1: 1 × 4 Sub 2: 1 × 4		
		Pipe type			Copper tube		
		Fin type			Aluminum		
Enclosure		Material			Polystyrene		
		Color			White + Pearl white (painted) Approximate color of Munsell N 9.25/		
Dimensions (H × W × D)		Net		mm	280 × 980 × 240		
		Gross			322 × 1,078 × 346		
Weight		Net		kg	12.5		
		Gross			18		
Connection pipe		Size	Liquid	mm (in)	Ø6.35 (Ø1/4)		
			Gas		Ø12.70 (Ø1/2)		
		Method			Flare		
Drain hose		Material			Polypropylene + High-density polyethylene		
		Tip diameter		mm	Ø13.8 (I.D.), Ø15.8 to Ø16.7 (O.D)		
Operation range		Cooling		°C	18 to 32		
				%RH	80 or less		
		Heating		°C	16 to 30		
Remote controller type					Wireless (Option: Wired, Mobile app*2 [FGLair™])		

NOTES:

- The protective function might work when using it outside the operation range.
- *1: Sound pressure level:
  - These are the measured values in the manufacturer's anechoic chamber.
  - Because of the surrounding sound environment, the sound levels measured in actual installation conditions might be higher than the specified values here.
- *2: Available on Google Play™ store or on App Store®. Optional WLAN Adapter is also required. For details, refer to the setting manual.

2-6. Ceiling type

Model name					ABEG18KRTA	ABEG22KRTA
Power supply					1Ø 230 V~ 50 Hz	
Available voltage range					198—264 V	
Capacity				kW class	5.0	6.0
Input power				W	37	46
Running current				A	0.21	0.25
Fan	Airflow rate	Cooling	HIGH	m^3/h	840	900
			MED		790	
			LOW		710	
			QUIET		650	
		Heating	HIGH		840	900
			MED		790	
			LOW		710	
			QUIET		650	
	Type × Qty				Sirocco fan × 2	
	Motor output			W	50	
Sound pressure level*1		Cooling	HIGH	dB (A)	38	42
			MED		36	37
			LOW		33	34
			QUIET		31	
		Heating	HIGH		38	42
			MED		36	37
			LOW		33	34
			QUIET		31	
Sound power level		Cooling		dB (A)	53	57
		Heating			53	57
Heat exchanger type		Dimensions (H × W × D)		mm	294 × 715 × 39.9	
		Fin pitch		mm	1.3	
		Rows × Stages			3 × 14	
		Pipe type			Copper	
		Fin type			Aluminum	
Enclosure	Material				Steel sheet	
	Color				White Approximate color of Munsell N9.25/	
Dimensions (H × W × D)	Net			mm	235 × 1,080 × 705	
	Gross				330 × 1,165 × 825	
Weight	Net			kg	24	
	Gross				33	
Connection pipe	Size	Liquid		mm (in)	Ø6.35 (Ø1/4)	
		Gas			Ø12.70 (Ø1/2)	
	Method				Flare	
Drain hose	Material				Polyvinyl chloride	
	Tip diameter			mm	Ø25 (I.D.), Ø32 (O.D.)	
Operation range		Cooling		°C	18 to 32	
				%RH	80 or less	
		Heating		°C	16 to 30	
Remote controller type					Wired remote controller, Wireless remote controller, Mobile app*2 (FGLair™)	

NOTES:

- The protective function might work when using it outside the operation range.
- *1: Sound pressure level:
  - These are the measured values in the manufacturer's anechoic chamber.
  - Because of the surrounding sound environment, the sound levels measured in actual installation conditions might be higher than the specified values here.
- *2: Available on Google Play™ store or on App Store®. Optional WLAN Adapter is also required. For details, refer to the setting manual.

2-7. Floor type

Model name					AGEG09KVCA	AGEG12KVCA	AGEG14KVCA
Power supply					230 V~ 50 Hz		
Available voltage range					198—264 V		
Capacity				kW class	2.5	3.5	4.0
Input power				W	16	20	23
Running current				A	0.15	0.18	0.20
Fan	Airflow rate	Cooling	HIGH	m^3/h	530	600	650
			MED		440	490	520
			LOW		360	380	400
			QUIET		270		
		Heating	HIGH		530	600	650
			MED		460	510	540
			LOW		380	410	430
			QUIET		270		
	Type × Qty				Crossflow fan × 2		
	Motor output			W	16 × 2		
Sound pressure level*1		Cooling	HIGH	dB (A)	39	42	44
			MED		34	36	38
			LOW		28	30	31
			QUIET		22		
		Heating	HIGH		39	42	44
			MED		35	38	39
			LOW		30	32	33
			QUIET		22		
Sound power level		Cooling		dB (A)	52	55	56
		Heating			52	55	56
Heat exchanger type		Dimensions (H × W × D)		mm	378 × 550 × 26.6		
		Fin pitch			1.2		
		Rows × Stages			2 × 18		
		Pipe type			Copper tube		
		Fin type			Aluminum		
Enclosure		Material			Polystyrene		
		Color			White Approximate color of Munsell N 9.25/		
Dimensions (H × W × D)		Net		mm	600 × 740 × 200		
		Gross			700 × 820 × 310		
Weight		Net		kg	14		
		Gross			18		
Connection pipe		Size	Liquid	mm (in)	Ø6.35 (Ø1/4)		
			Gas		Ø9.52 (Ø3/8)		
		Method			Flare		
Drain hose		Material			Polypropylene + Linear low-density polyethylene		
		Tip diameter		mm	Ø13.8 (I.D.), Ø15.8 to Ø16.7 (O.D.)		
Operation range		Cooling		°C	18 to 32		
				%RH	80 or less		
		Heating		°C	30 or less		
Remote controller type					Wireless (Option: Wired, Mobile app*2 [FGLair™])		

NOTES:

- The protective function might work when using it outside the operation range.
- *1: Sound pressure level:
  - These are the measured values in the manufacturer's anechoic chamber.
  - Because of the surrounding sound environment, the sound levels measured in actual installation conditions might be higher than the specified values here.
- *2: Available on Google Play™ store or on App Store®. Optional WLAN Adapter is also required. For details, refer to the setting manual.

3. Wireless LAN control (for KMCG, KMCG-B, KETF, KETF-B, KGTG, and KNCA)

By installing mobile app on a smart device, several functions can be controlled from outside the house.

3-1. System requirement

Before using this function, prepare the following items:

- **Wireless router:**

Wireless LAN standard	IEEE802.11b/g/n
Frequency bands*	• U.S.A., Canada: 2.4 GHz (1ch—11ch) • Other countries: 2.4 GHz (1ch—13ch)
Network security standard	• Open • WEP • WPA (PSK) • WPA2 Personal (PSK) • WPS for same-LAN registration

*: Usable only in the country or region where you purchased the product.

To check whether your wireless router complies with the network security standards listed above, refer to the operation manual.

- **Smartphone:**

App-compliant operating system	iOS	Check the latest version of supported OS at Google Play store or App Store.
	Android™	

- **AIRSTAGE Mobile (mobile application):**
  Mobile app is available on Google Play store or on App Store.
  After installation of mobile app, user registration is required. For user registration and setup information, refer to Setting Manual attached with the product.

For the latest version of the wireless LAN control manuals, refer to the following web site.
https://www.fujitsu-general.com/global/support/

4. Dimensions

4-1. Compact cassette type

■ Models: AUXG07–22KVLA

Unit: mm

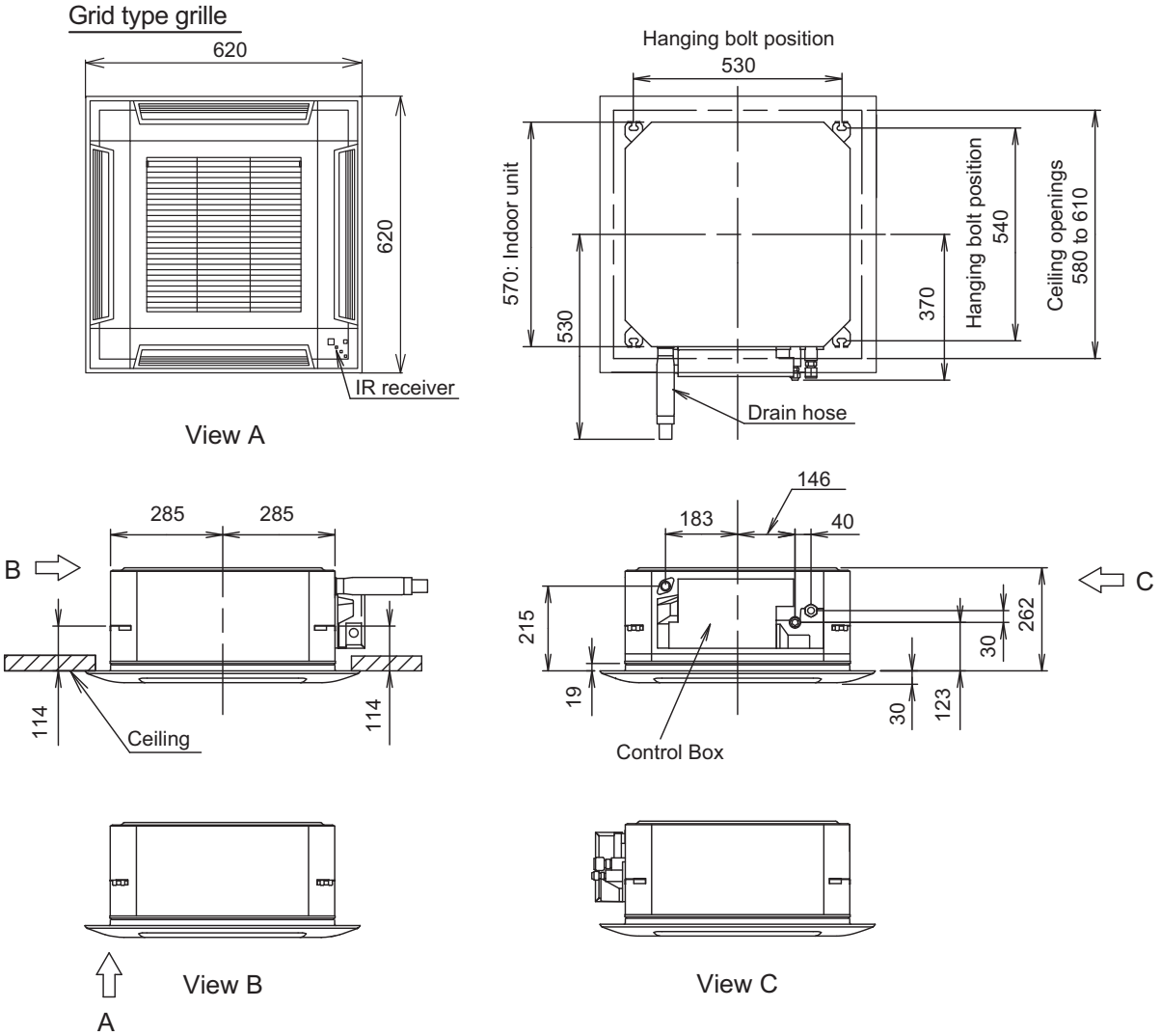

4-5 UNIT
MULTI-SPLIT TYPE

● Installation space requirement

Provide enough clearance for product safety.

Unit: mm

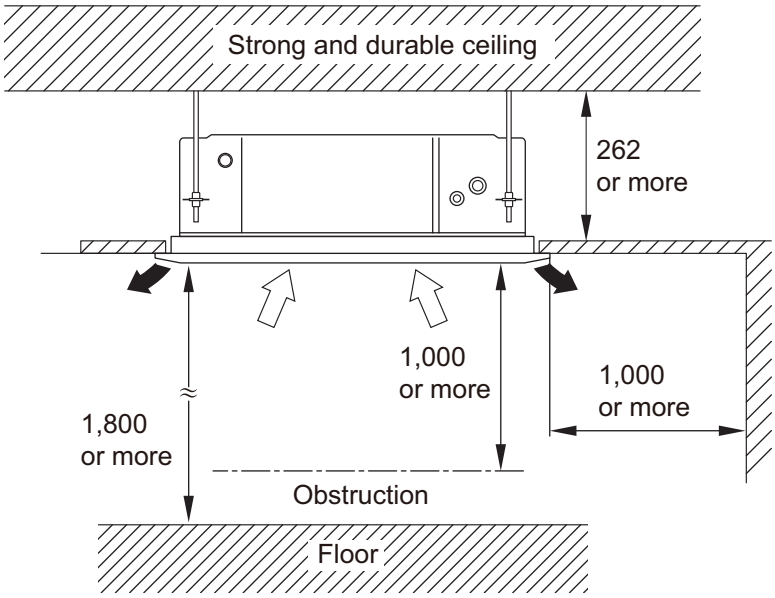

Maximum height from floor to ceiling (Unit: mm)		
	07 and 09 models	12 or larger models
Standard	2,700	
High ceiling	—	3,000

● 3-way direction setting

Unit: mm

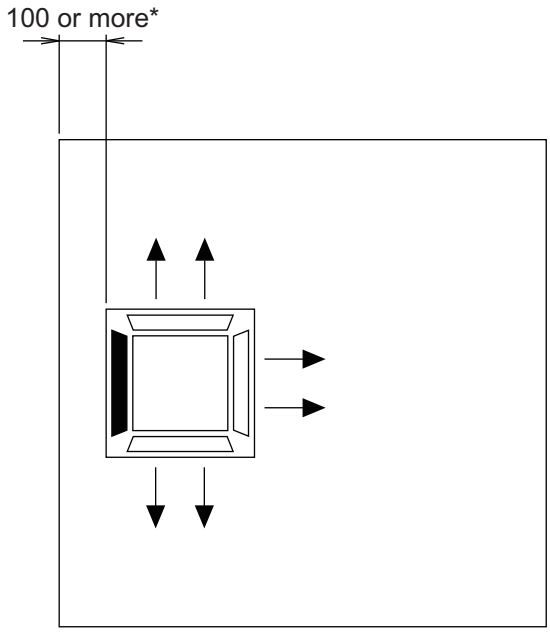

NOTES:

- To set “3-direction”, optional Air Outlet Shutter Plate (UTR-YDZB) must be installed, and the “outlet-direction” need to be switched to “3-way” by remote controller.
  *When installing the indoor unit, be careful about the maintenance space.
- In 3-way outlet mode, changing of ceiling height setting by function setting 20 is prohibited. (Ceiling height setting [function setting 20] is allowed to be changed only in 4-way outlet mode.)

4-2. Mini duct type

■ Models: ARXG07–14KSLAP

Unit: mm

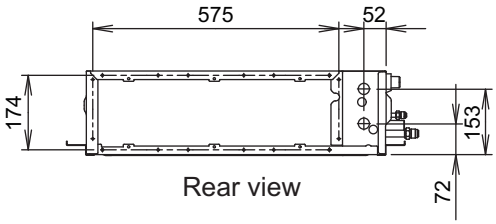

Rear view

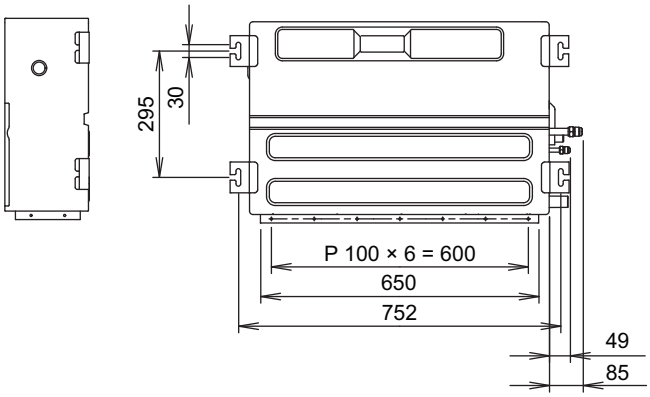

Side view (L)

Top view

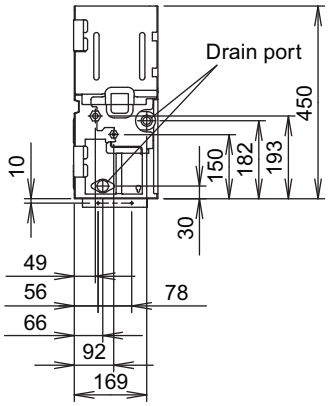

Side view (R)

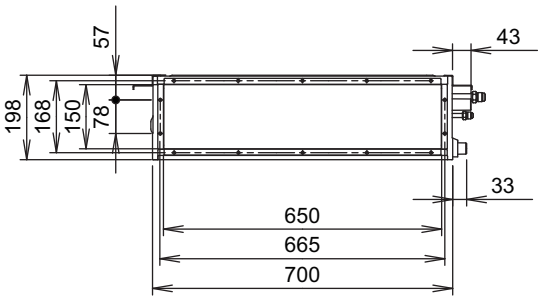

Front view

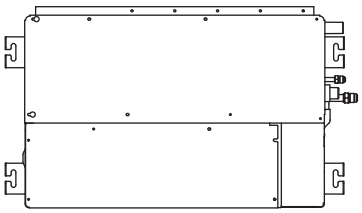

Bottom view

■ Model: ARXG18KSLAP

Unit: mm

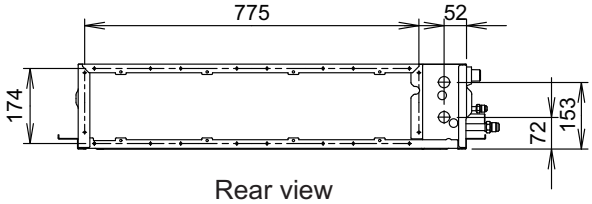

Rear view

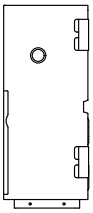

Side view (L)

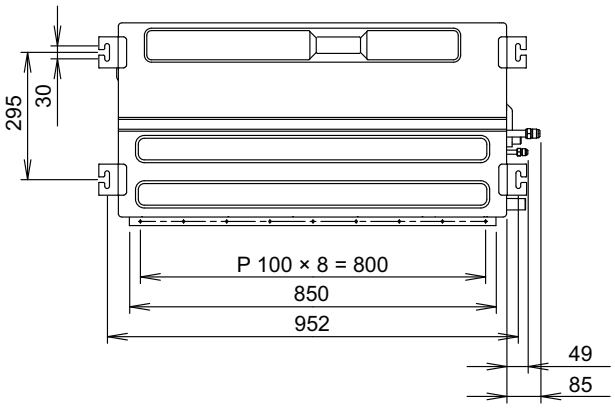

Top view

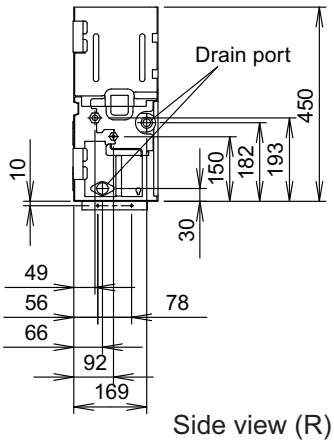

Side view (R)

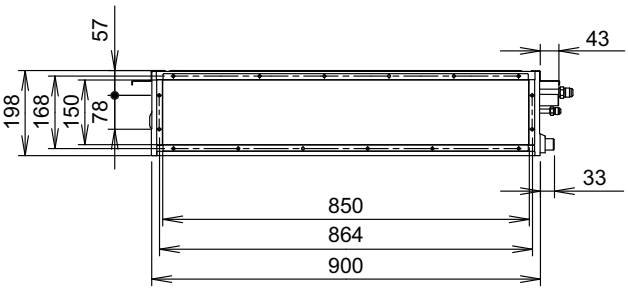

Front view

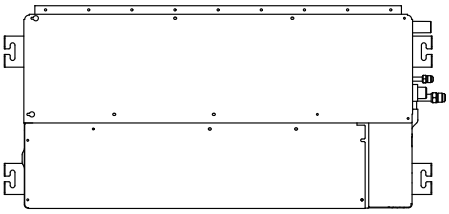

Bottom view

● Installation space requirement

Provide sufficient installation space for product safety.

Unit: mm

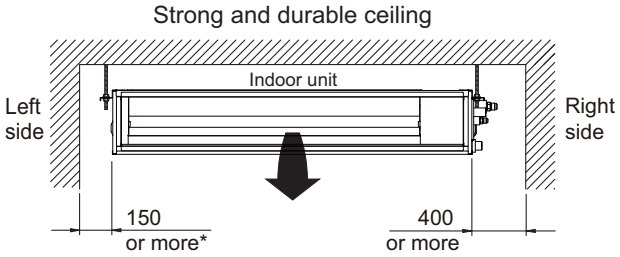

*: 400 or more when drain from drain pipe

- **When intaking air from back:**

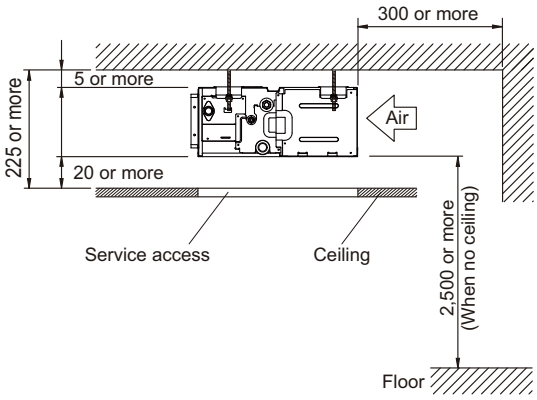

- **When intaking air from bottom:**

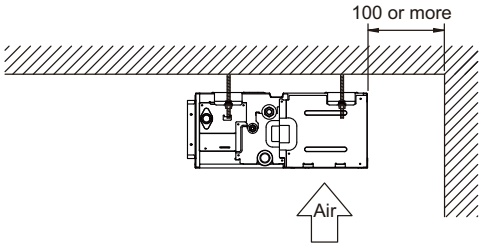

● Maintenance space requirement

Provide enough clearance for efficient maintenance.

NOTE: Do not place wiring or illumination in the maintenance space, as they impede maintenance work.

Unit: mm

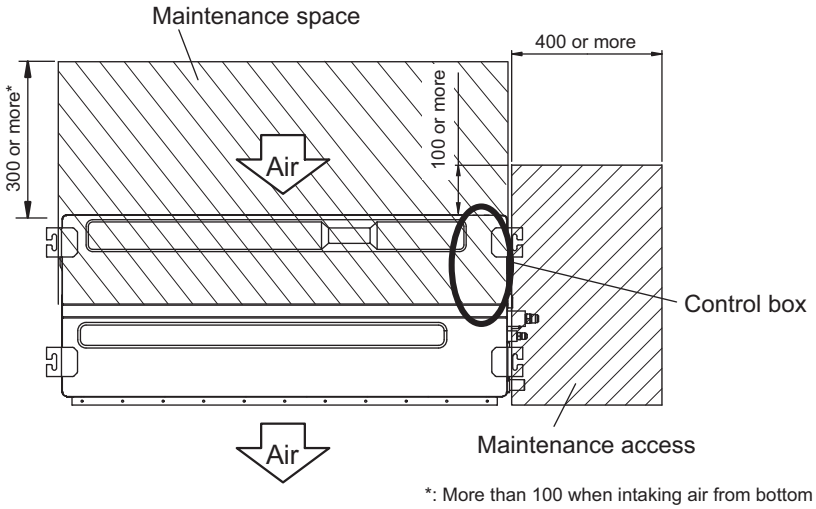

*: More than 100 when intaking air from bottom

Top view

4-3. Slim duct type

■ Models: ARXG07–14KLLAP

Unit: mm

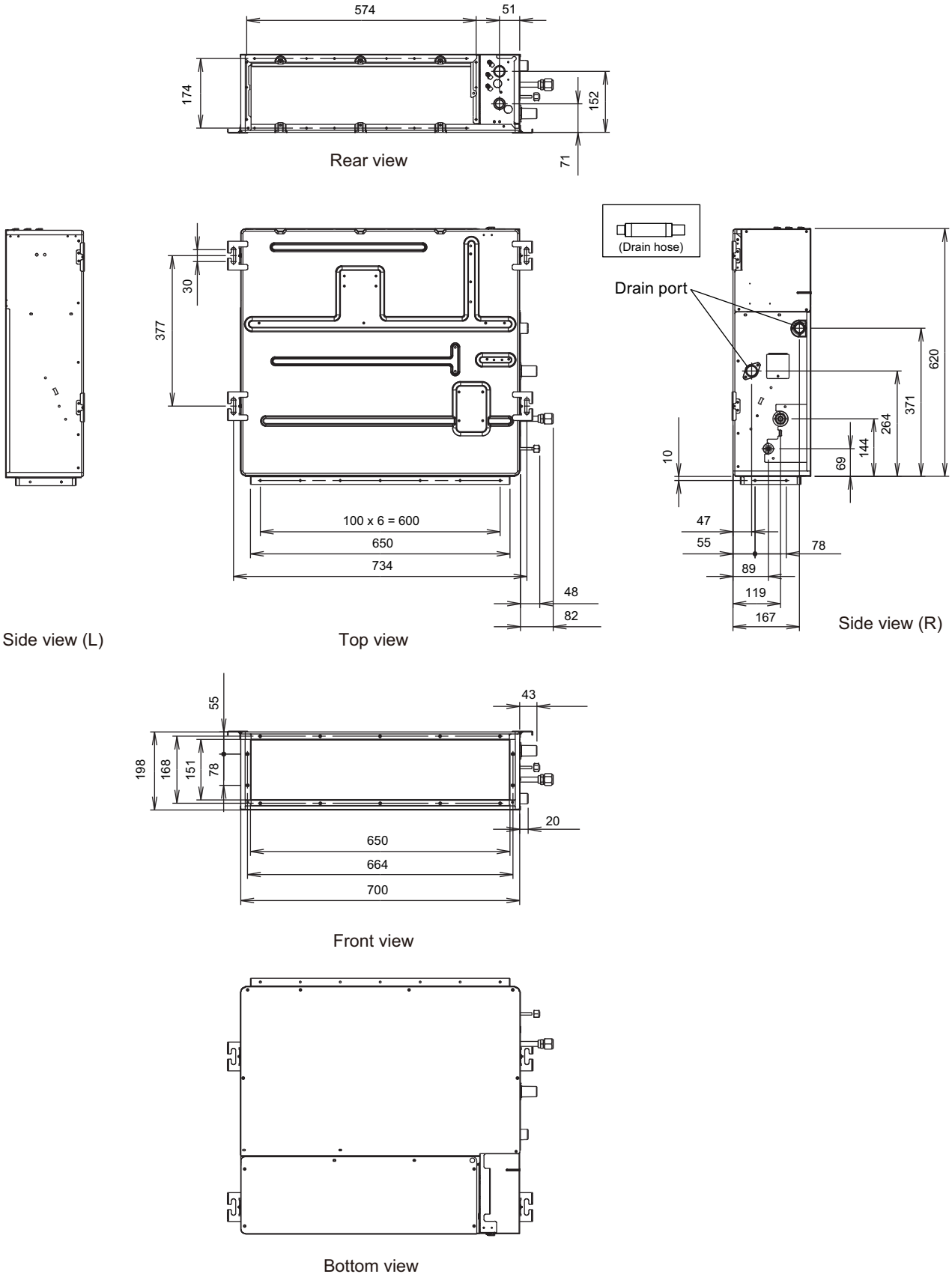

■ Model: ARXG18KLLAP

Unit: mm

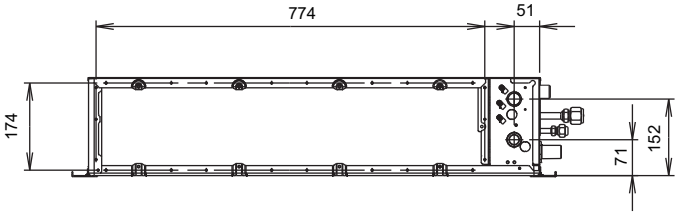

Rear view

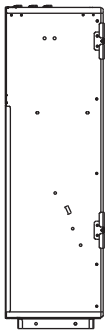

Side view (L)

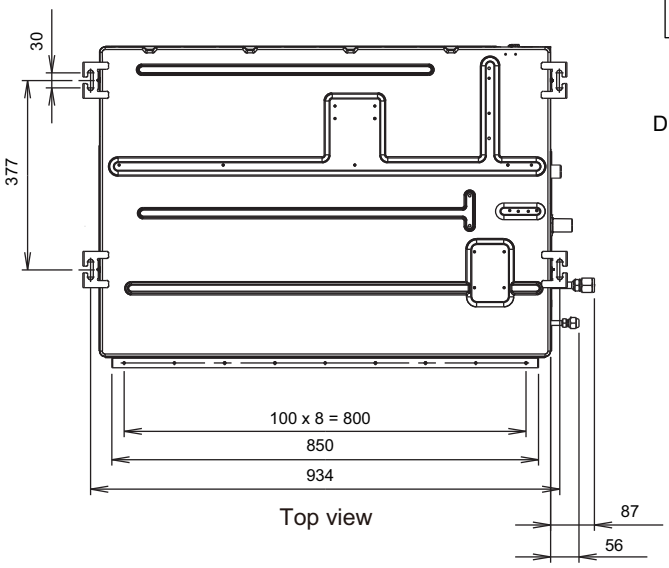

Top view

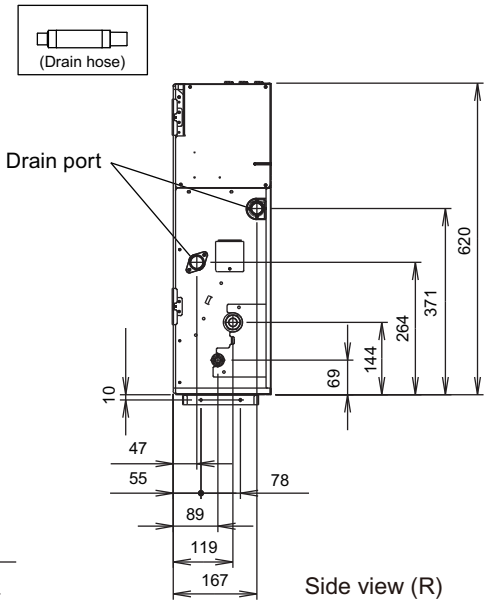

Side view (R)

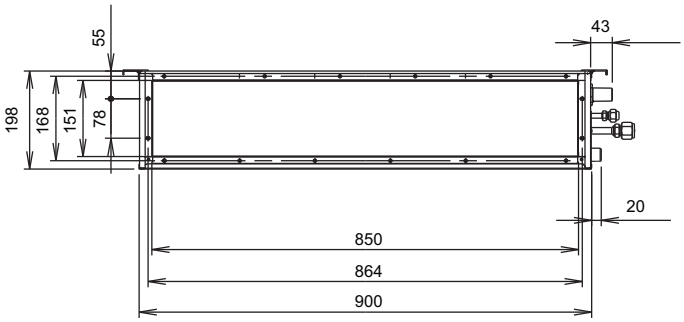

Front view

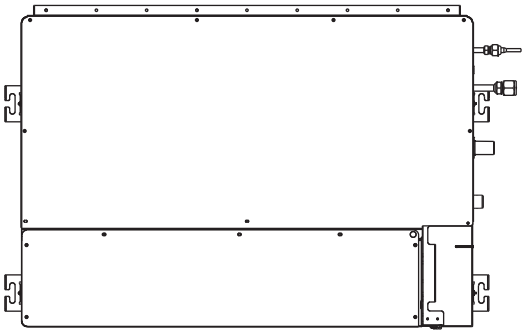

Bottom view

4-5 UNIT
MULTI-SPLIT TYPE

● Installation space requirement

Provide sufficient installation space for product safety.

In ceiling-concealed installations:

Unit: mm

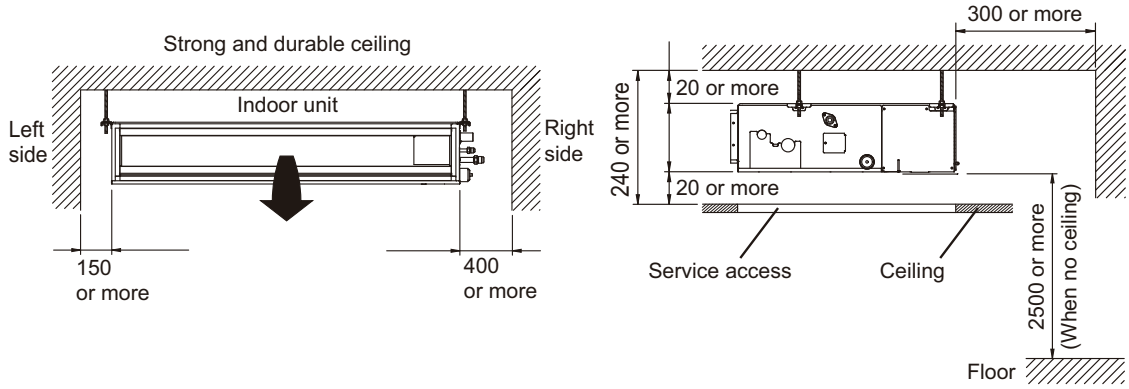

● Maintenance space requirement

Provide enough clearance for efficient maintenance.

NOTE: Do not place wiring or illumination in the maintenance space, as they impede maintenance work.

Unit: mm

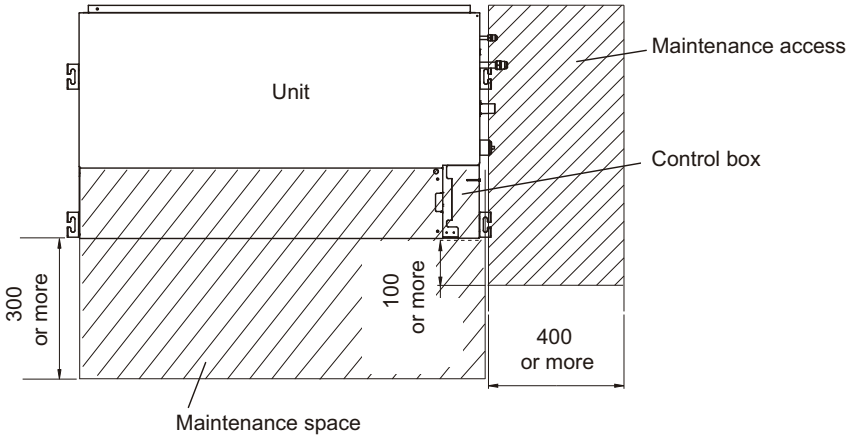

4-4. Medium static pressure duct type

■ Model: ARXG22KMLB

Unit: mm

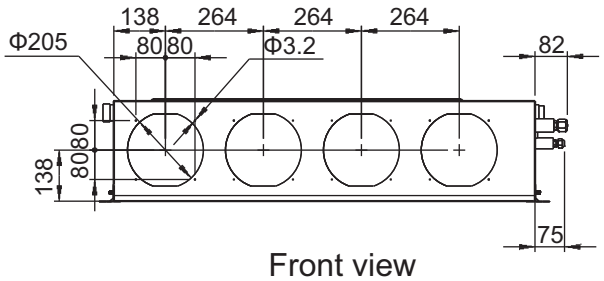

Front view

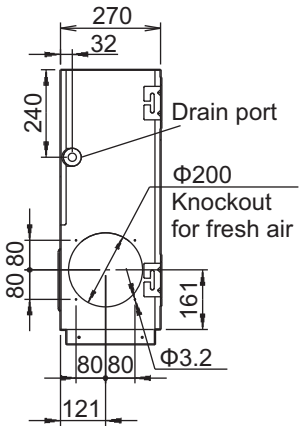

Side view (L)

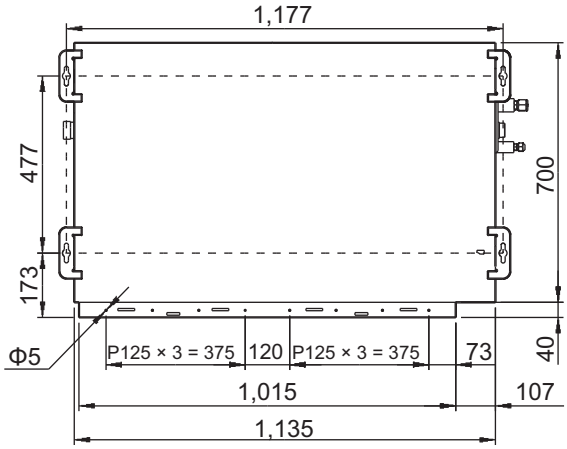

Top view

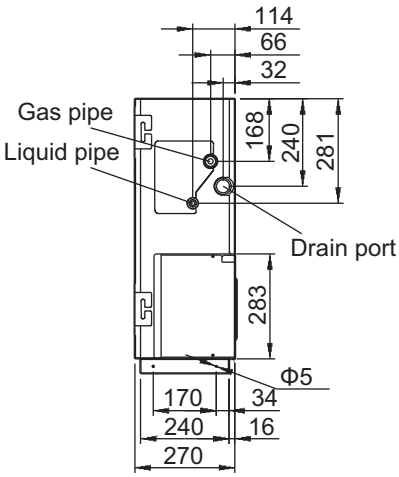

Side view (R)

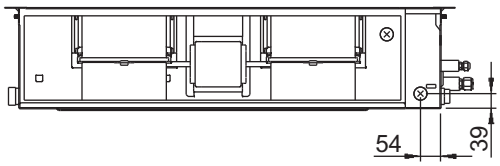

Rear view

● Installation space requirement

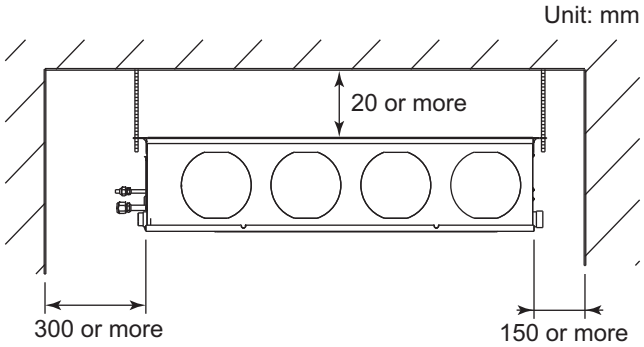

4-5 UNIT
MULTI-SPLIT TYPE

● Maintenance space requirement

Unit: mm

- Provide a maintenance access for maintenance purposes.

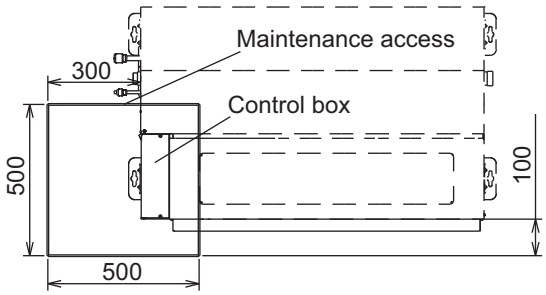

- The maintenance access necessary for fan units and filter maintenance.

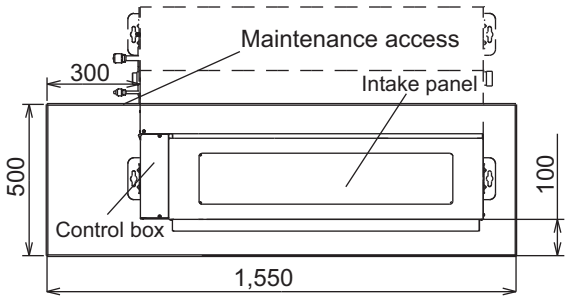

- When using a square duct

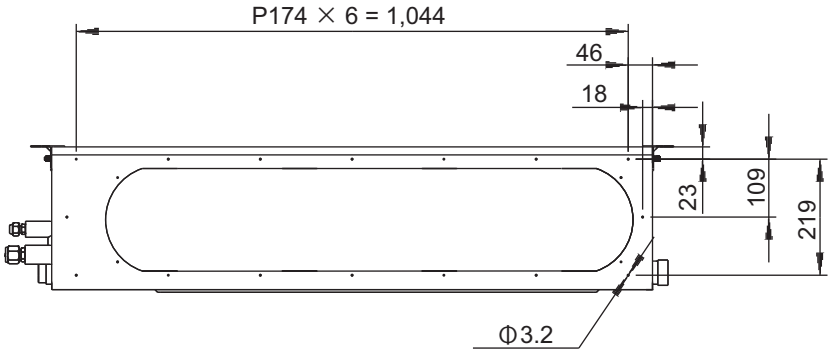

- Bottom air intake hole

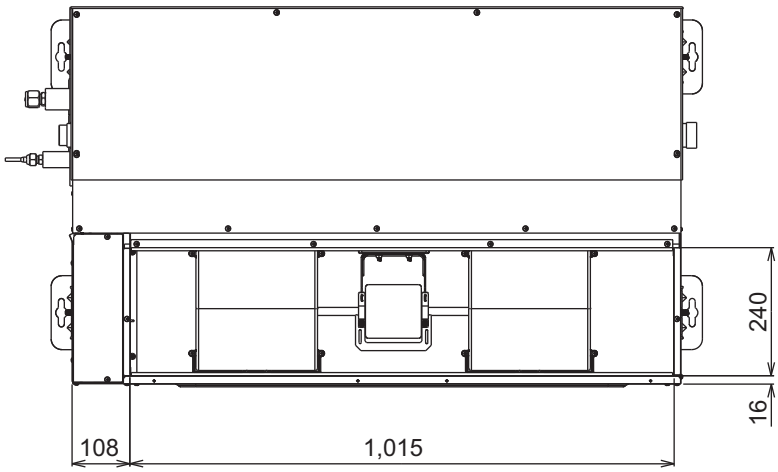

■ Models: ARXH12–18KMTAP

Unit: mm

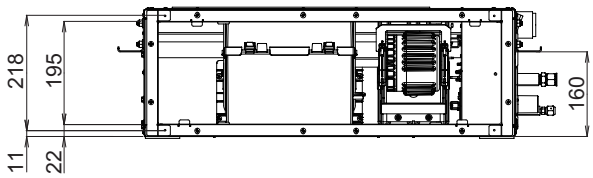

Rear view

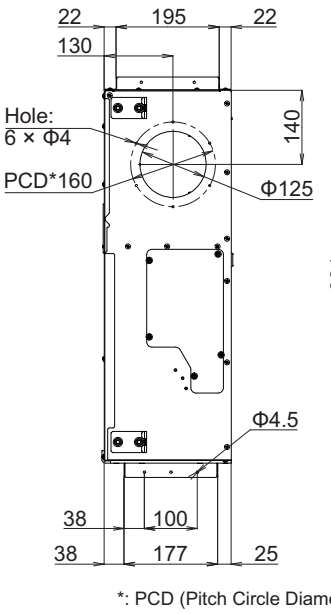

Side view (L)

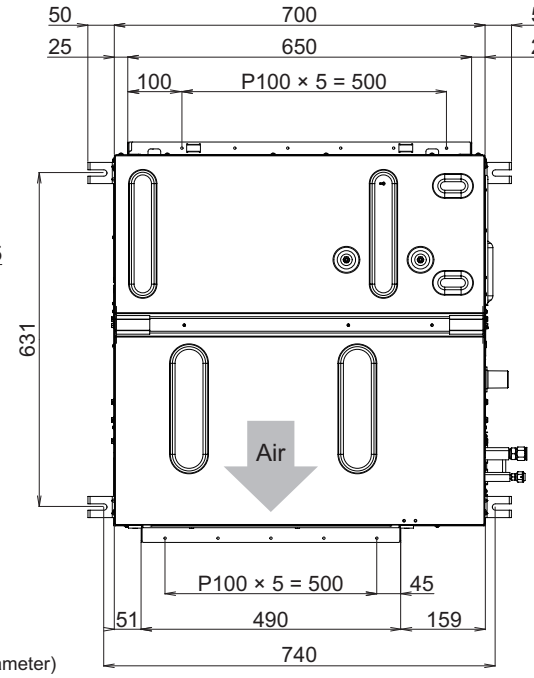

Top view

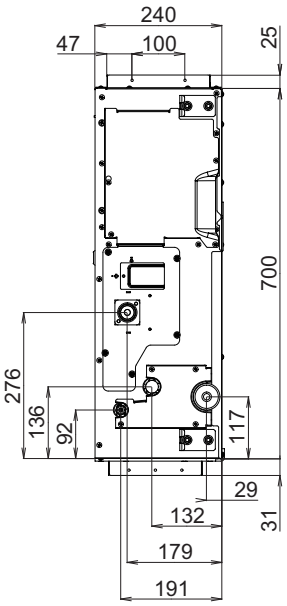

Side view (R)

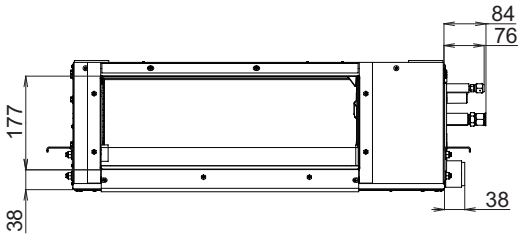

Front view

4-5 UNIT
MULTI-SPLIT TYPE

● Installation space requirement

Provide enough clearance for product safety.

NOTE: The detailed component shape depends on the model.

Unit: mm

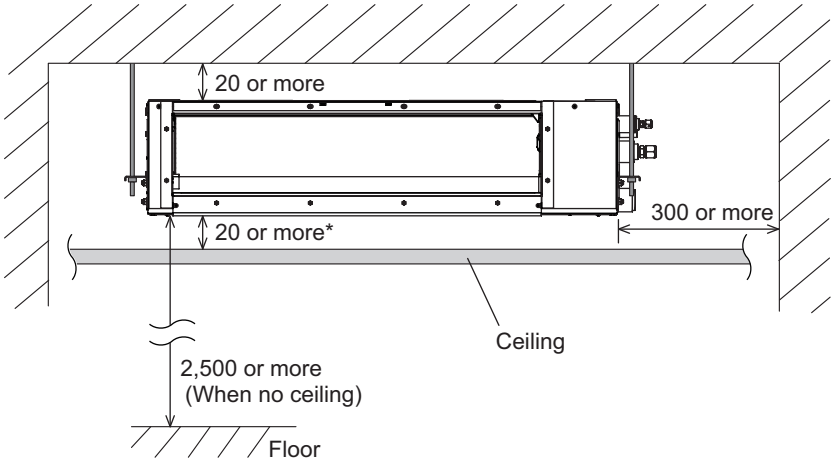

*: According to the distance between the ceiling and the unit, the construction plan of the maintenance access differs.

● Maintenance space requirement

Provide one or two maintenance accesses for the fan units and the filters or the inspections of the control box, drain pump, and the other parts.
Numbers and the sizes of the maintenance accesses differ according to the distance between the ceiling and the unit as follows.

Unit: mm

- Distance between the ceiling and the unit is 300 or more:

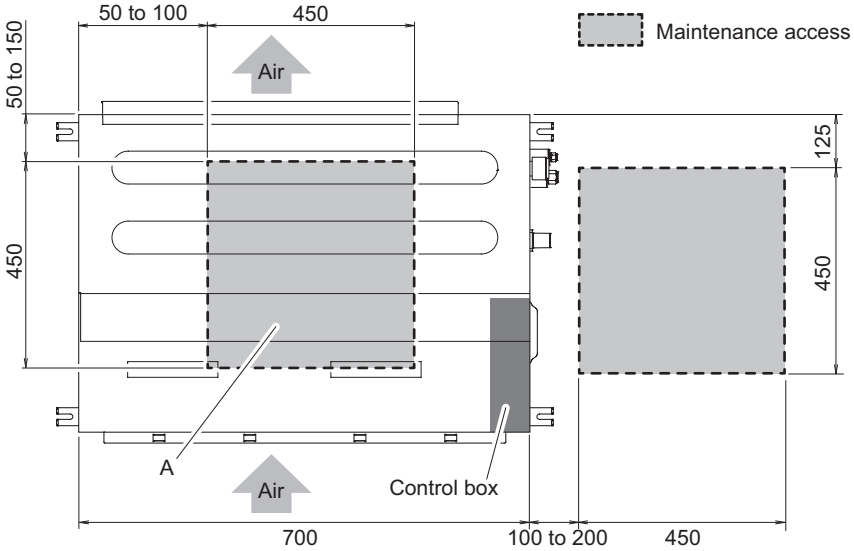

Bottom view

NOTE: If there is sufficient working space between the indoor unit and the ceiling plate, the maintenance access under the unit (A) is not necessary.

Unit: mm

- Distance between the ceiling and the unit is from 20 to 300:
  Choose one of these methods to set up the maintenance access.

Pattern A

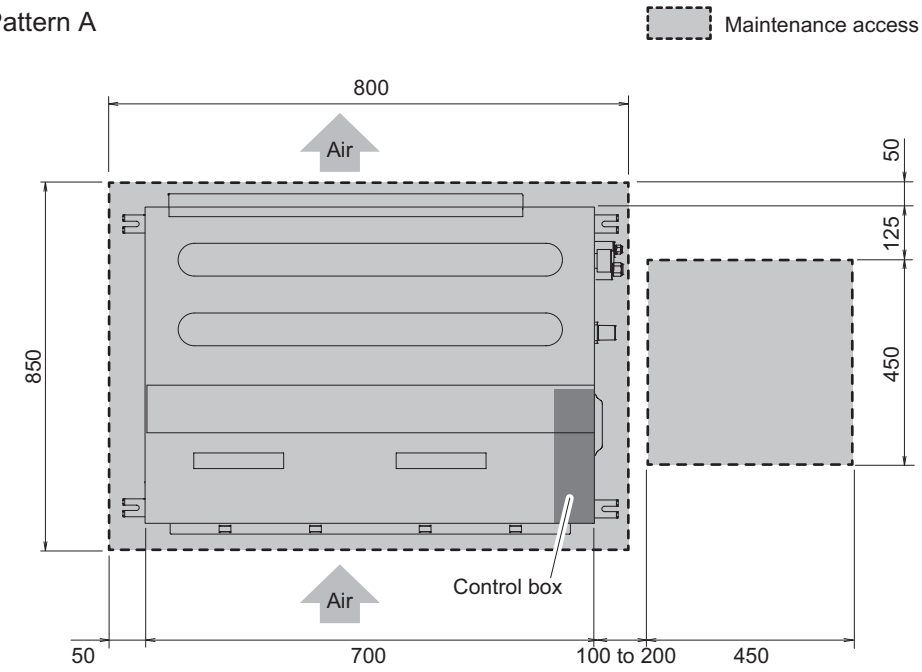

Pattern B

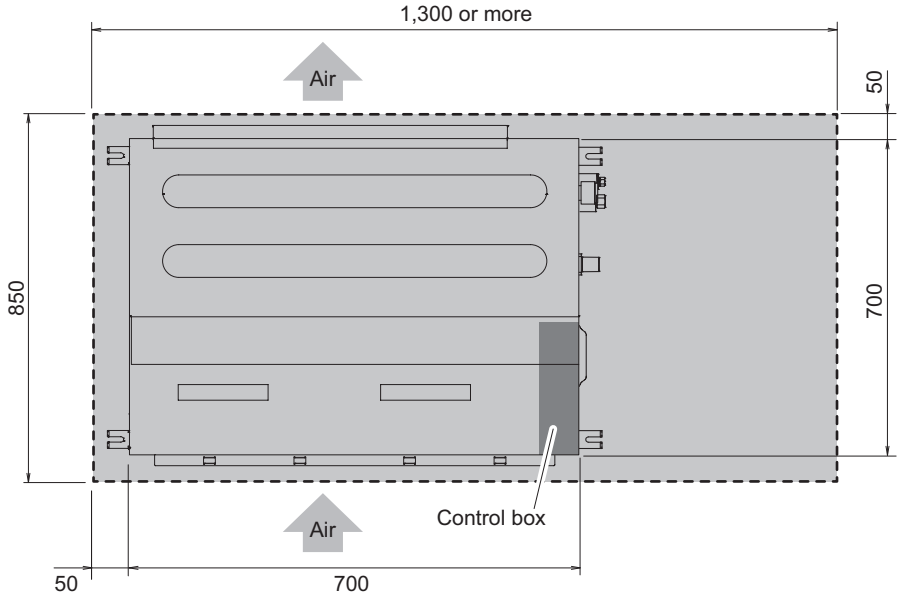

Bottom view

■ Model: ARXH22KMTAP

Unit: mm

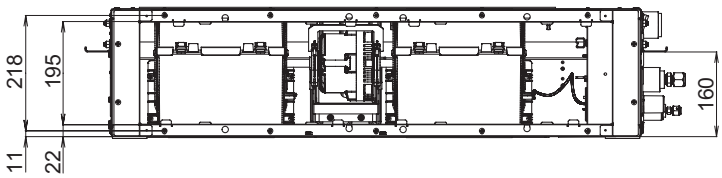

Rear view

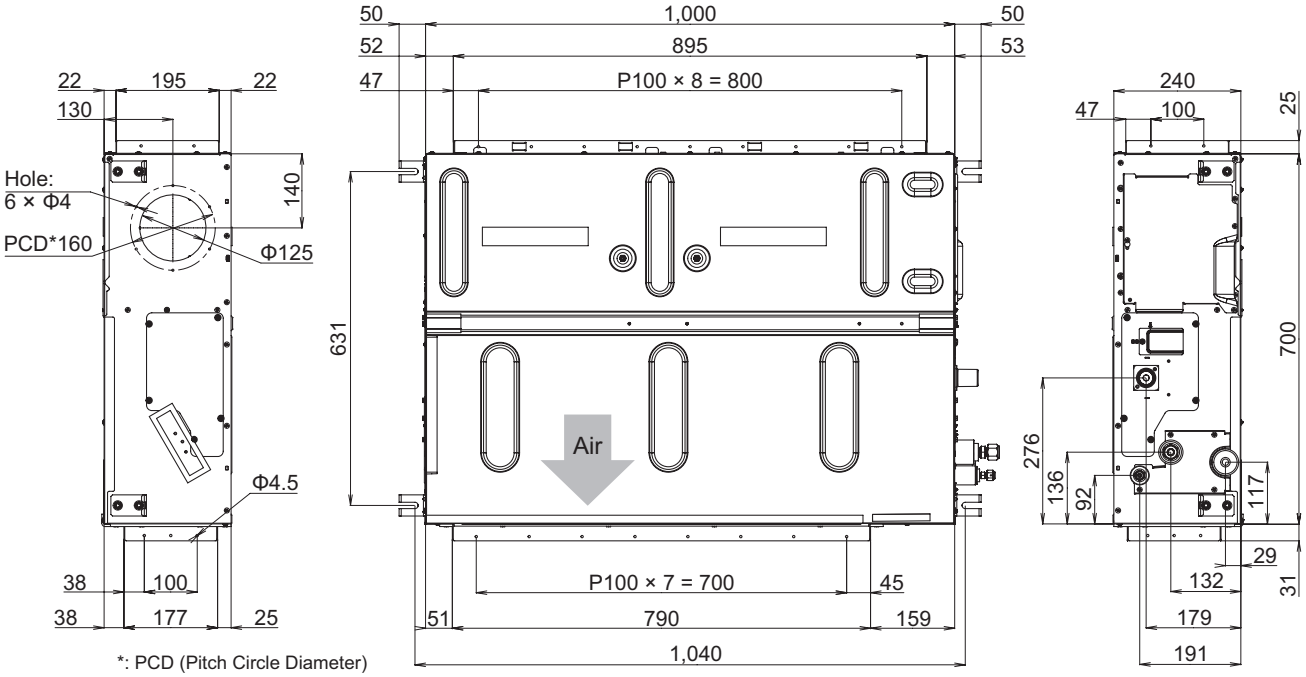

Side view (L)

Top view

Side view (R)

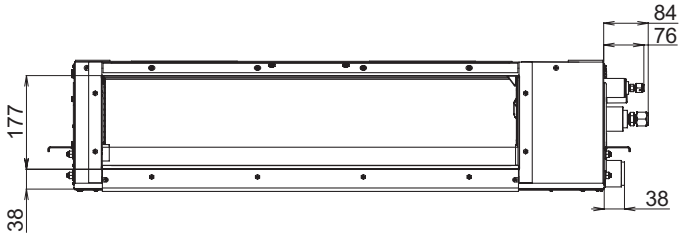

Front view

4-5 UNIT
MULTI-SPLIT TYPE

● Installation space requirement

Provide enough clearance for product safety.

NOTE: The detailed component shape depends on the model.

Unit: mm

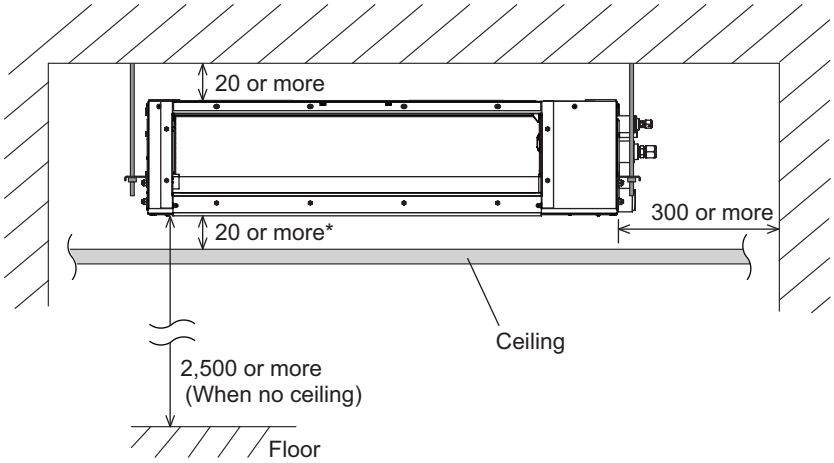

*: According to the distance between the ceiling and the unit, the construction plan of the maintenance access differs.

● Maintenance space requirement

Provide enough clearance for efficient maintenance.

NOTES:

- Do not place wiring or illumination in the maintenance space, as they impede maintenance work.
- The detailed component shape depends on the model.

Provide one or two maintenance accesses for the fan units and the filters or the inspections of the control box, drain pump, and the other parts.
Numbers and the sizes of the maintenance accesses differ according to the distance between the ceiling and the unit as follows.

Unit: mm

- Distance between the ceiling and the unit is 300 or more:

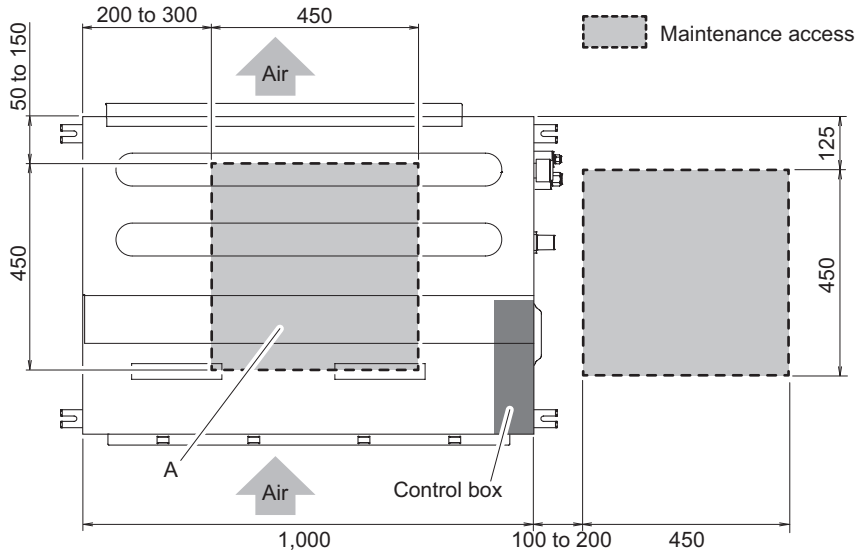

Bottom view

NOTE: If there is sufficient working space between the indoor unit and the ceiling plate, the maintenance access under the unit (A) is not necessary.

Unit: mm

- Distance between the ceiling and the unit is from 20 to 300:
  Choose one of these methods to set up the maintenance access.

Pattern A

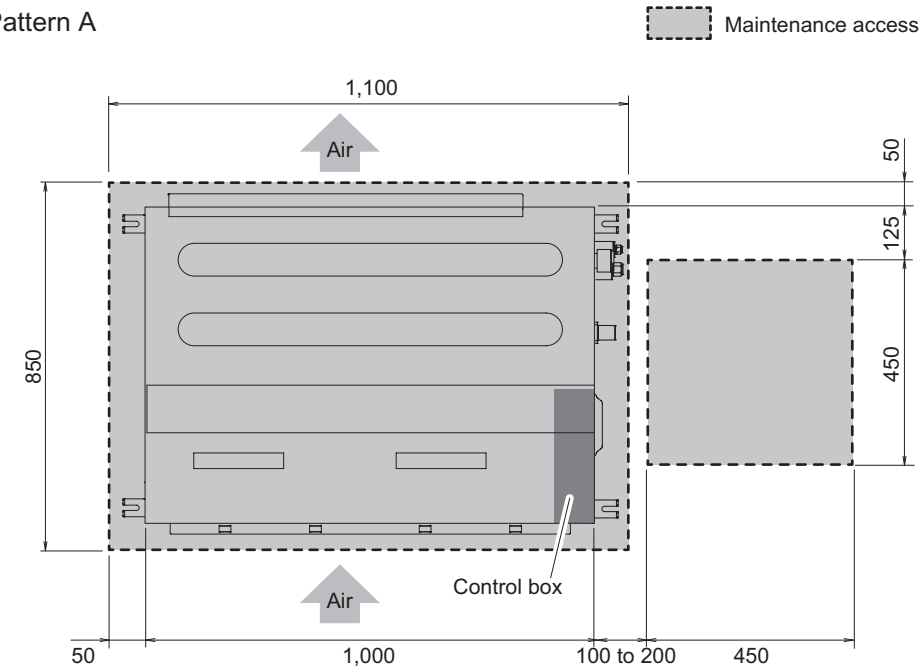

Pattern B

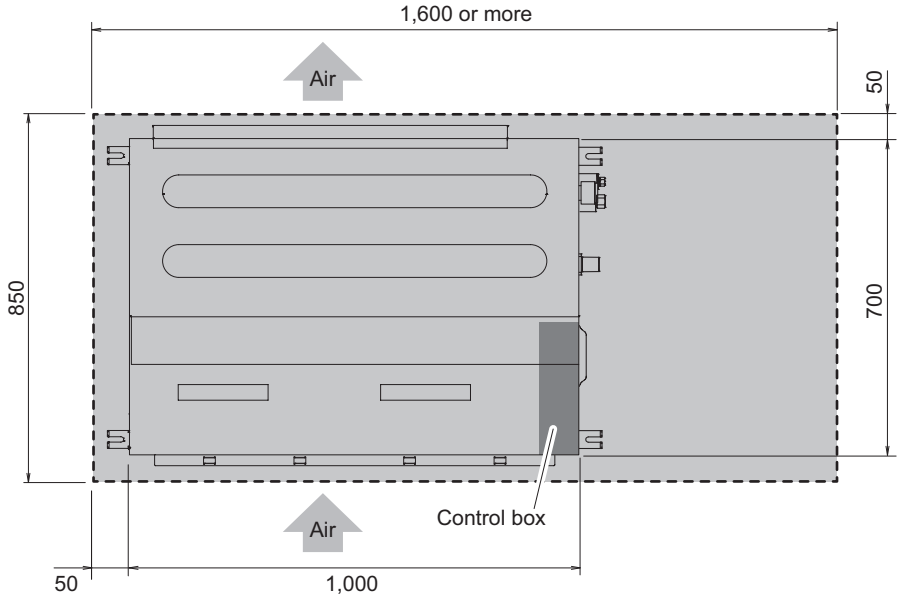

Bottom view

4-5. Wall mounted type

■ Models: ASEH07–14KMCG and ASEH07–14KMCG-B

Unit: mm

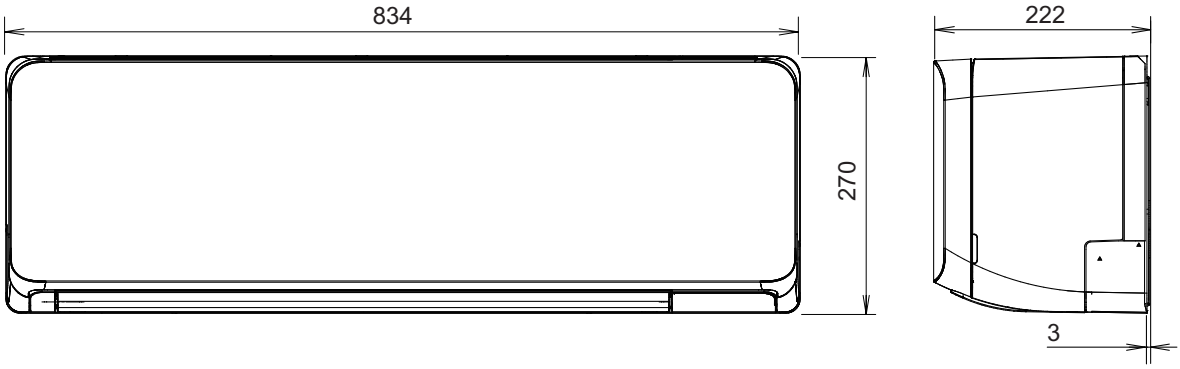

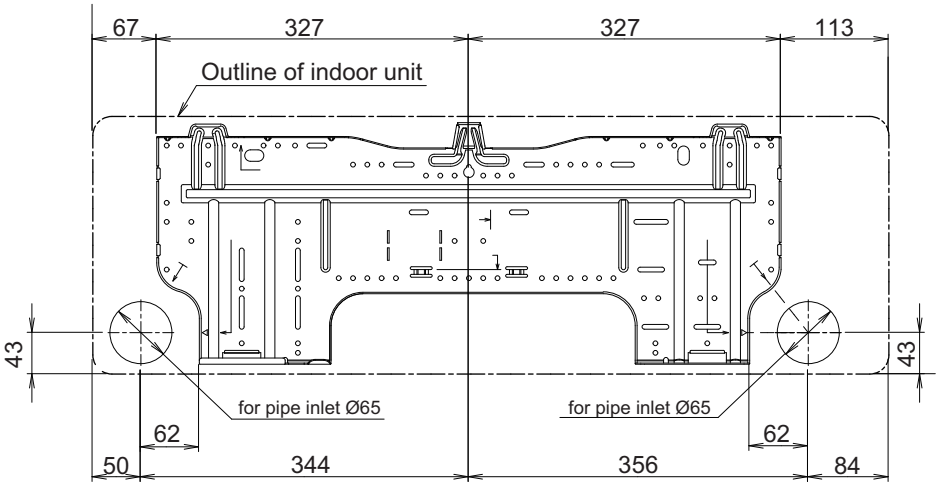

4-5 UNIT
MULTI-SPLIT TYPE

● Installation space requirement

Provide sufficient installation space for product safety.

Unit: mm

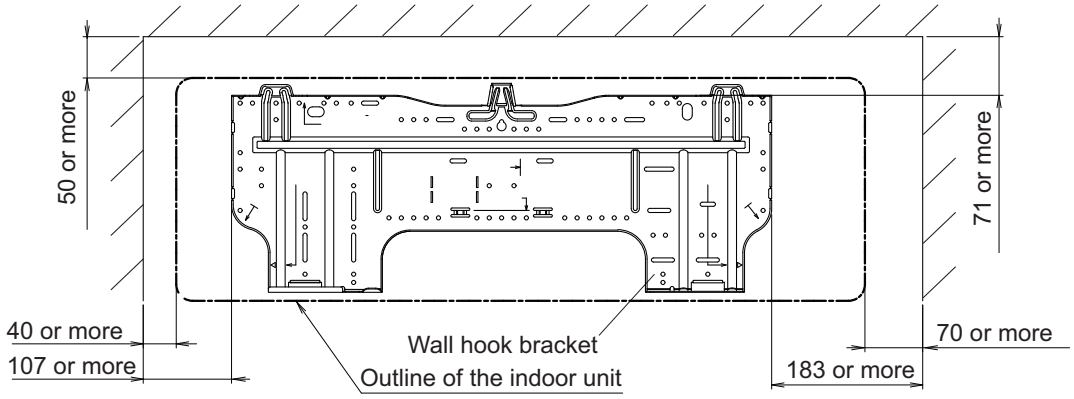

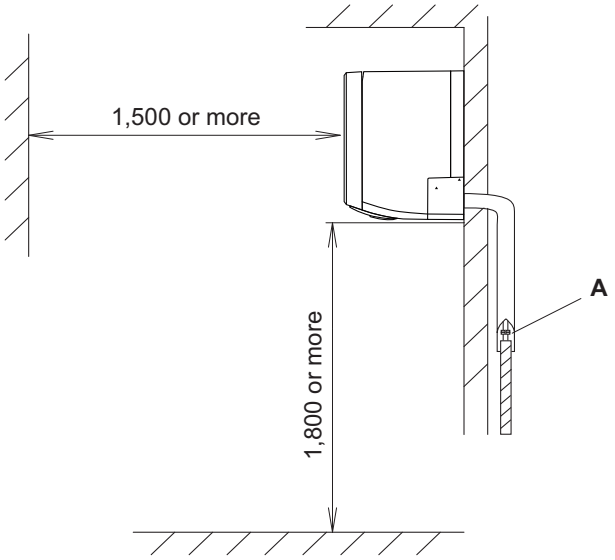

A: Install so that the flare connection part is outdoors.

4-5 UNIT
MULTI-SPLIT TYPE

■ Models: ASEG07–14KETF and ASEG07–14KETF-B

Unit: mm

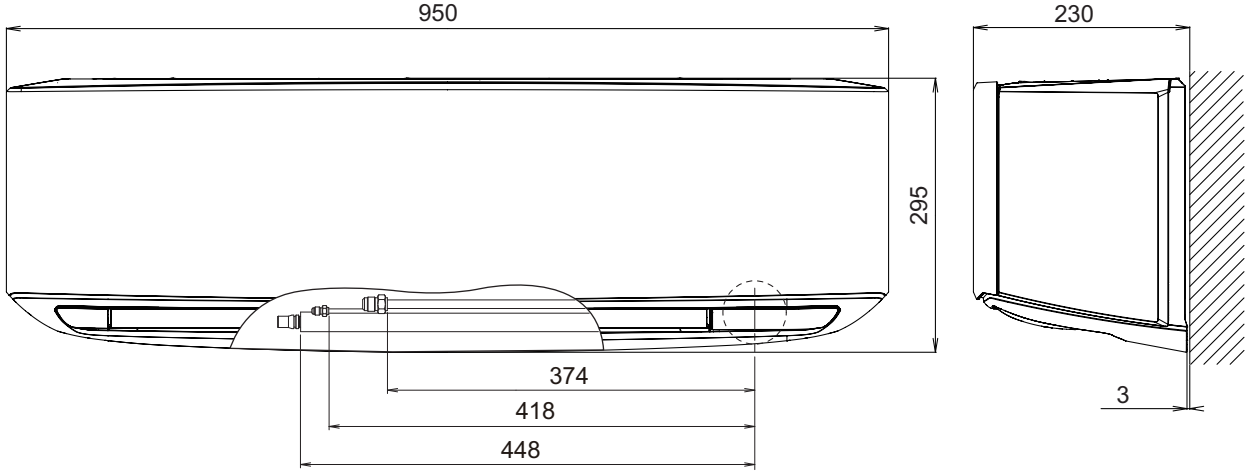

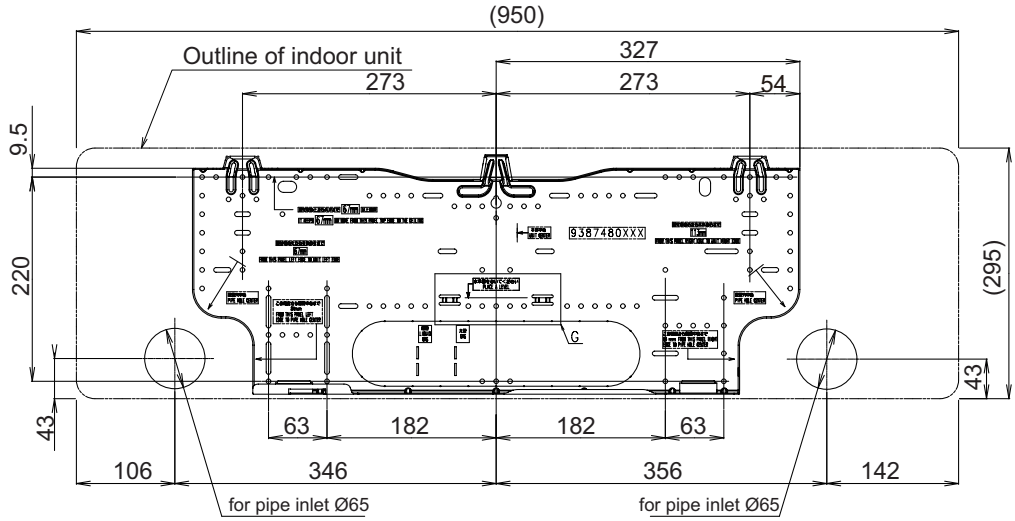

4-5 UNIT
MULTI-SPLIT TYPE

● Installation space requirement

Provide sufficient installation space for product safety.

Unit: mm

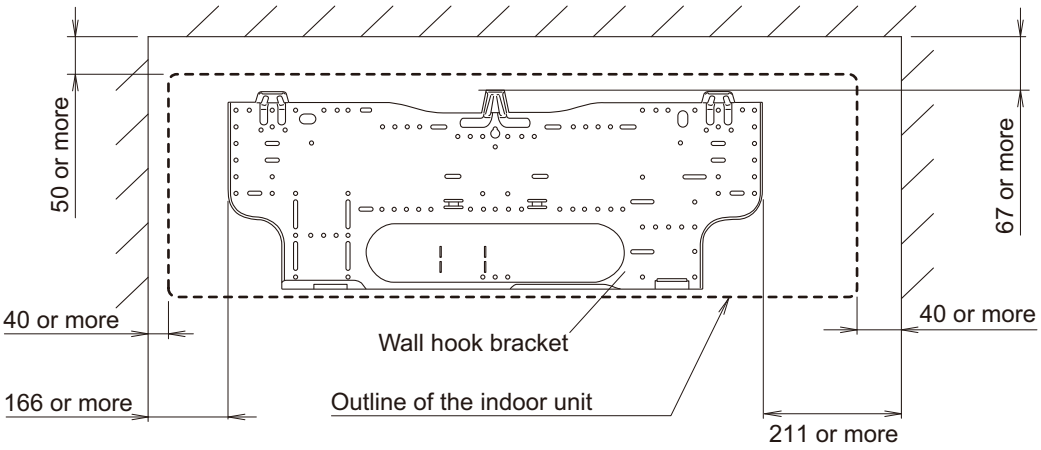

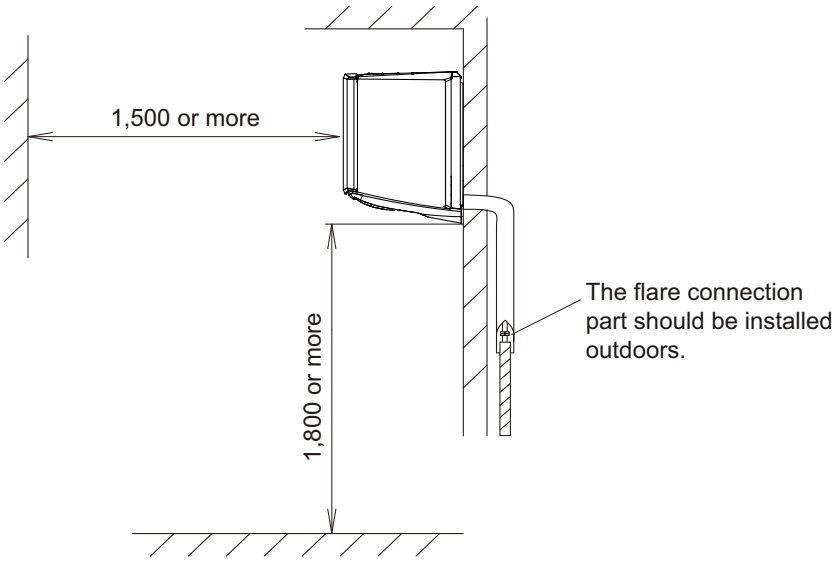

4-5 UNIT
MULTI-SPLIT TYPE

■ ASEH07–14KGTG

Unit: mm

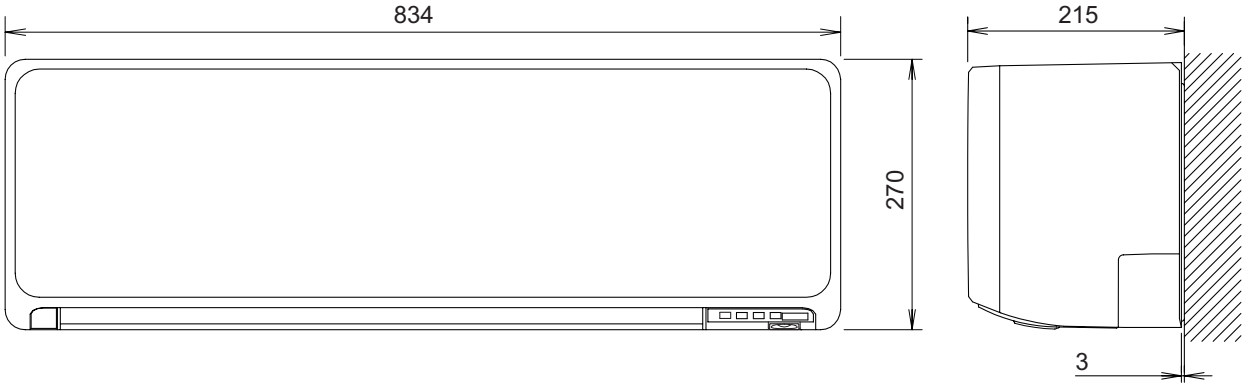

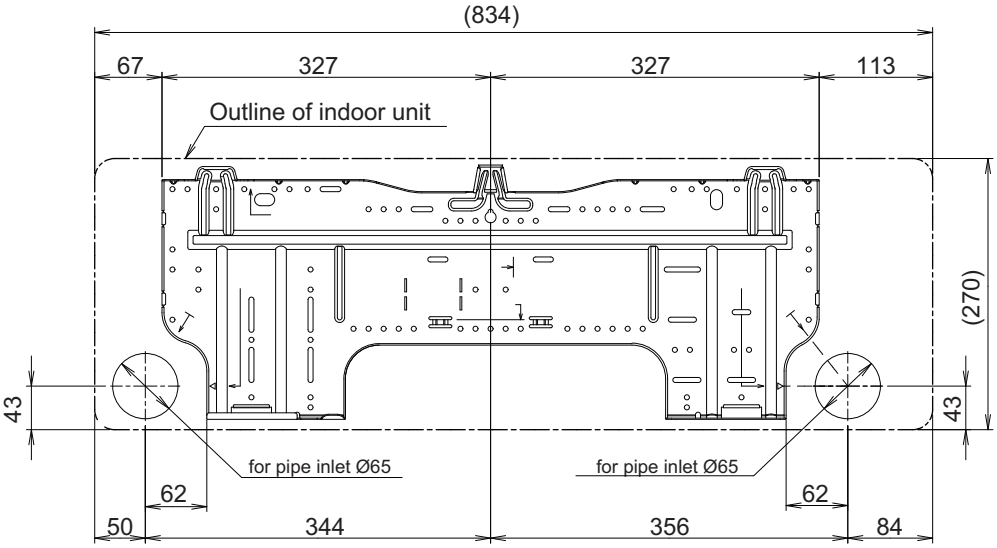

4-5 UNIT
MULTI-SPLIT TYPE

● Installation space requirement

Provide sufficient installation space for product safety.

Unit: mm

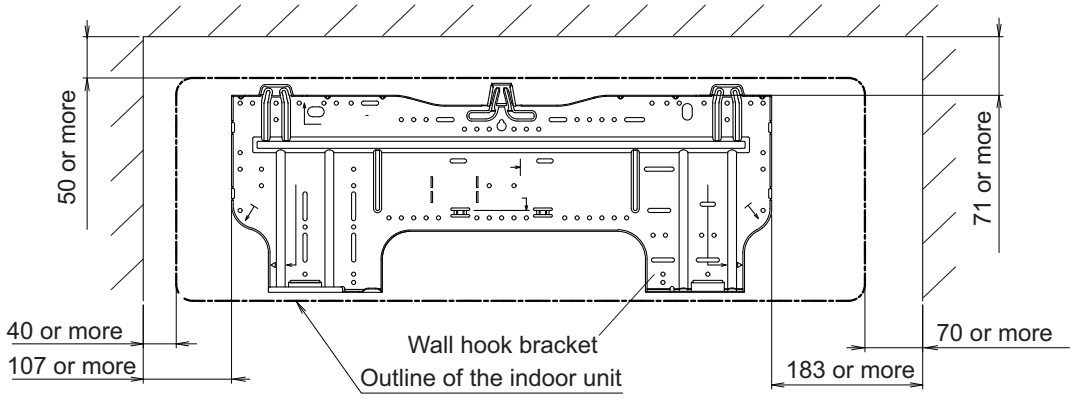

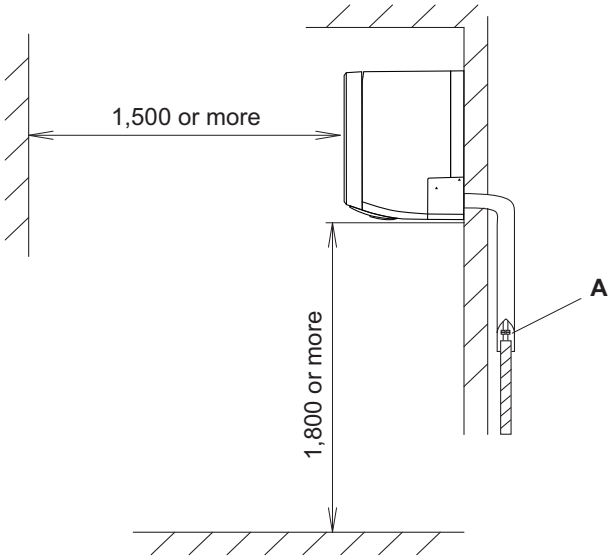

A: Install so that the flare connection part is outdoors.

■ Models: ASEH05–12KNCA

Unit: mm

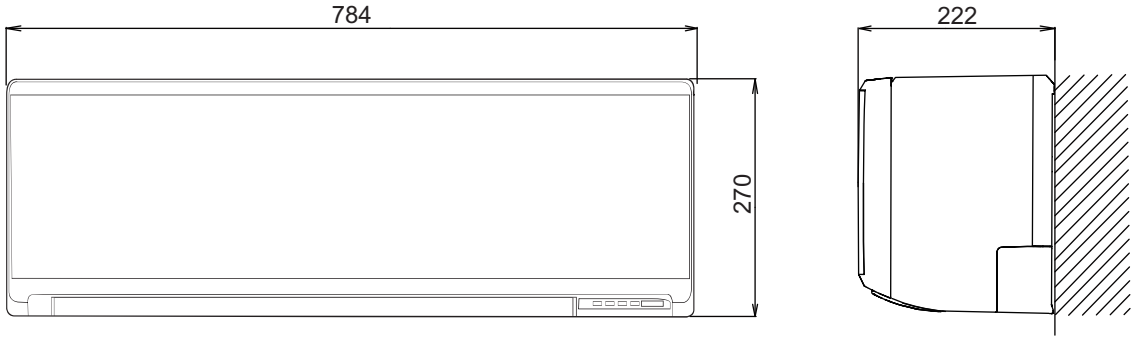

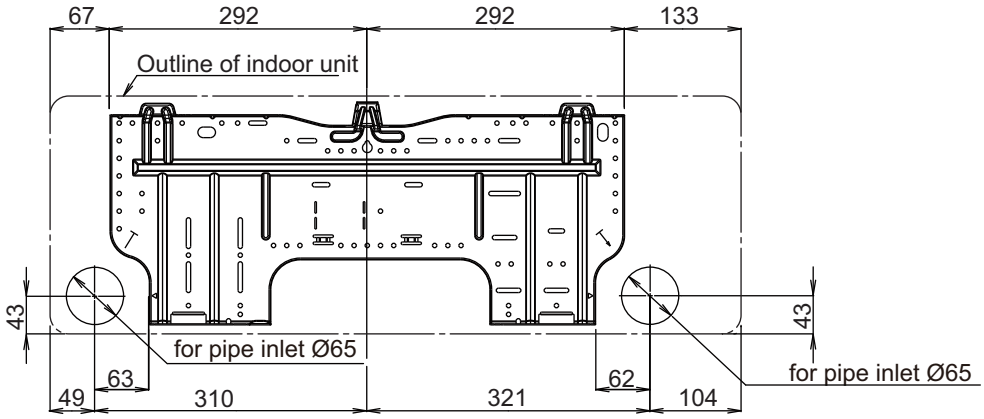

4-5 UNIT
MULTI-SPLIT TYPE

● Installation space requirement

Provide sufficient installation space for product safety.

Unit: mm

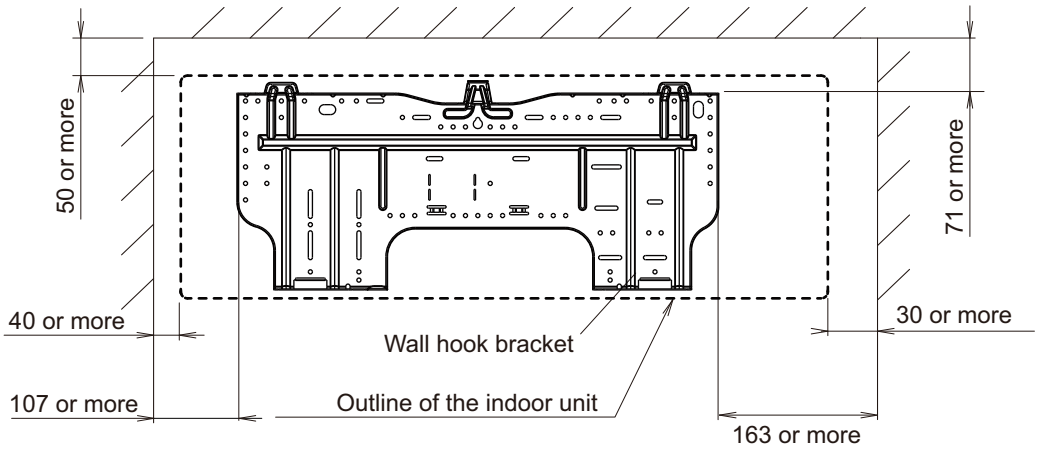

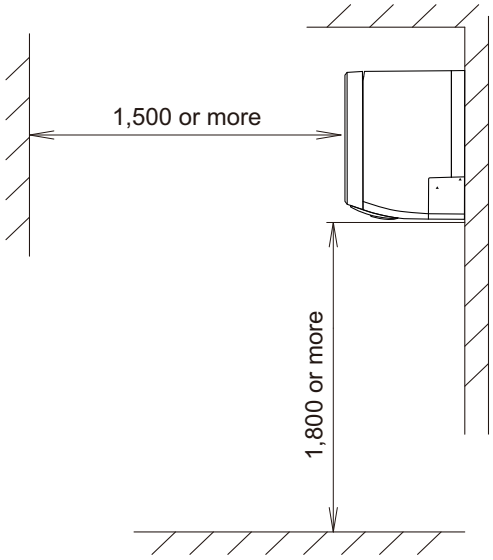

■ Models: ASEG18–24KMTE

Unit: mm

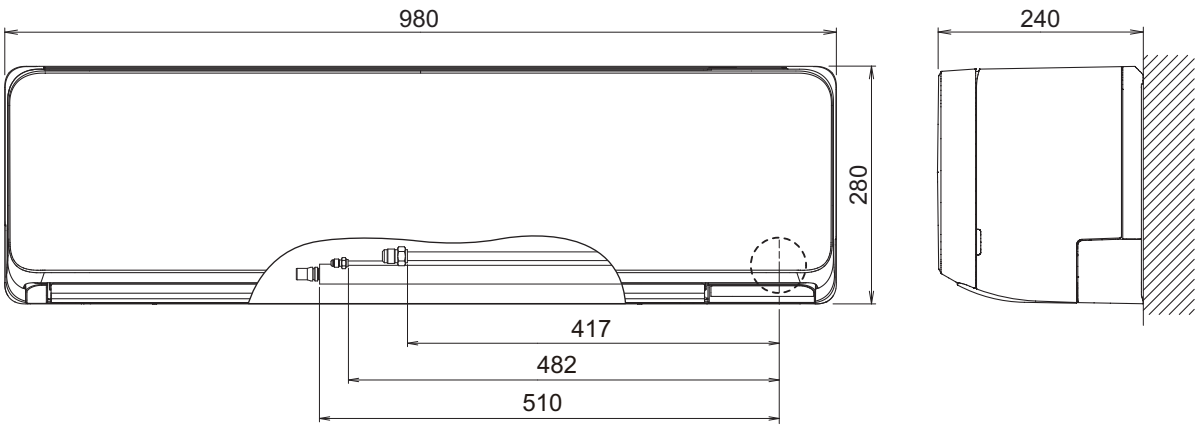

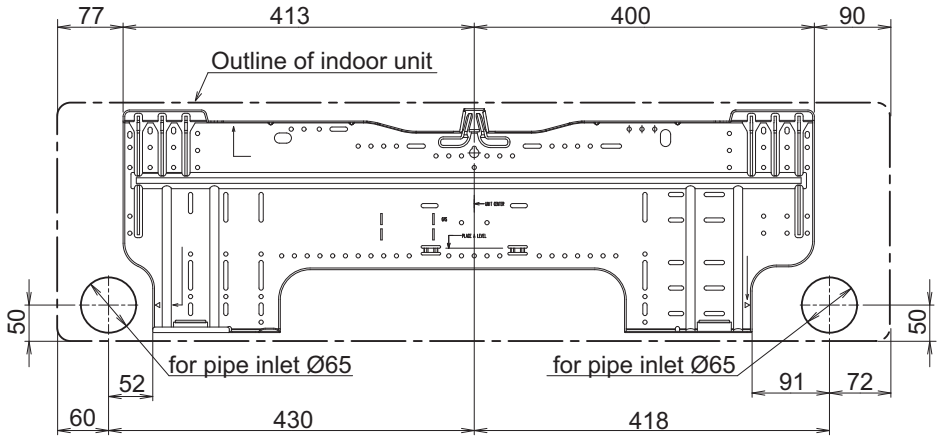

4-5 UNIT
MULTI-SPLIT TYPE

● Installation space requirement

Provide sufficient installation space for product safety.

Unit: mm

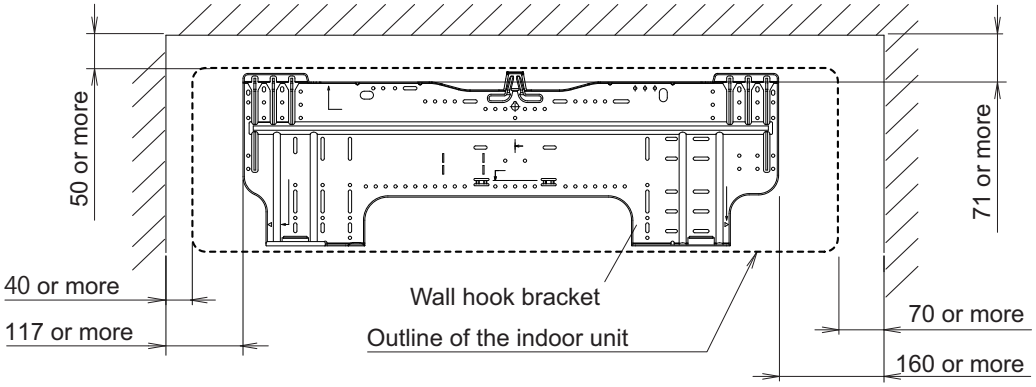

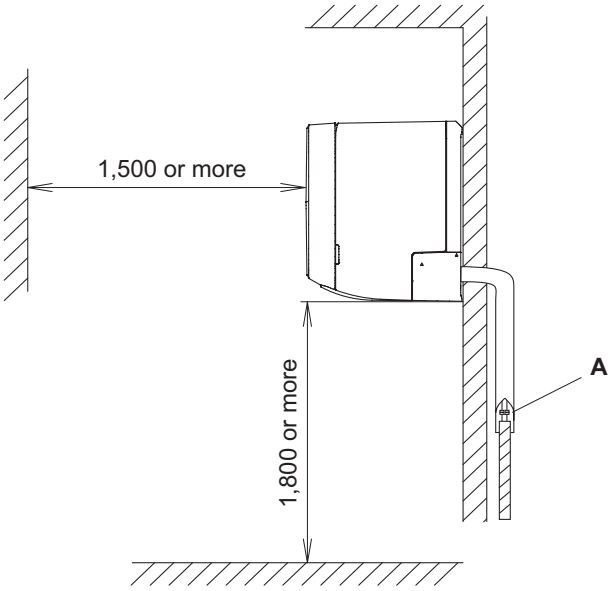

A: Install so that the flare connection part is outdoors.

4-5 UNIT
MULTI-SPLIT TYPE

■ Pipe exit length from the rear (for KMCG, KMCG-B, KGTG, and KNCA)

Design the system considering the length of the pipes or hose exiting from the rear of the indoor unit.

NOTE: Detailed shapes of the indoor unit and the tip of each pipe or hose may vary depending on the model.

Unit: mm

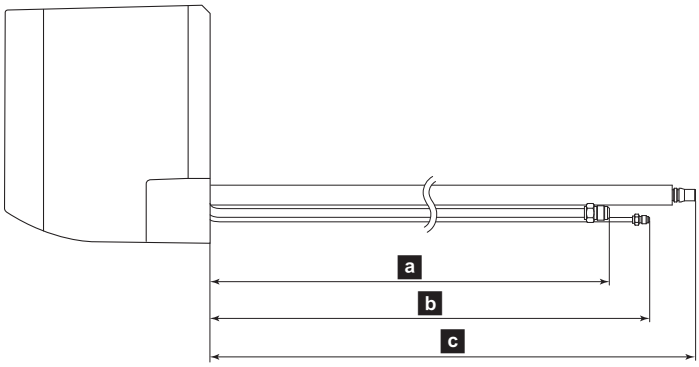

Model name	Approximate length		
	a Gas pipe	b Liquid pipe	c Drain hose
ASEH07–14KMCG ASEH07–14KMCG-B	395	435	480
ASEH07–14KGTG	380	430	480
ASEH05–12KNCA	380	430	485

4-6. Ceiling type

■ Models: ABEG18–22KRTA

Unit: mm

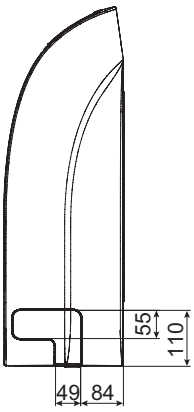

Side view

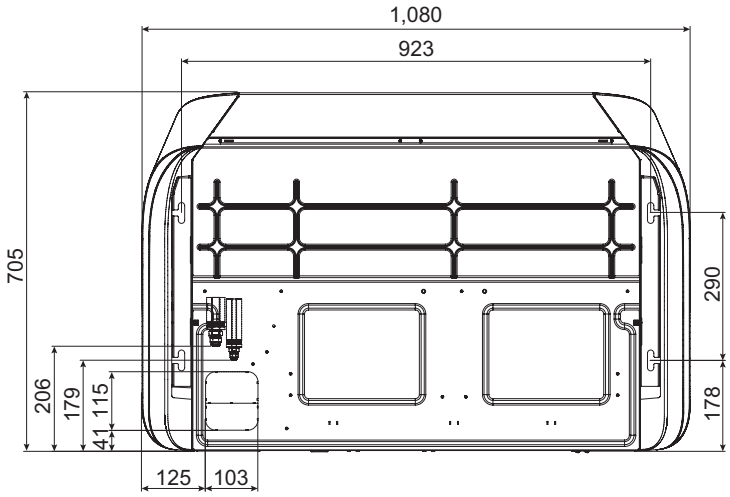

Top view

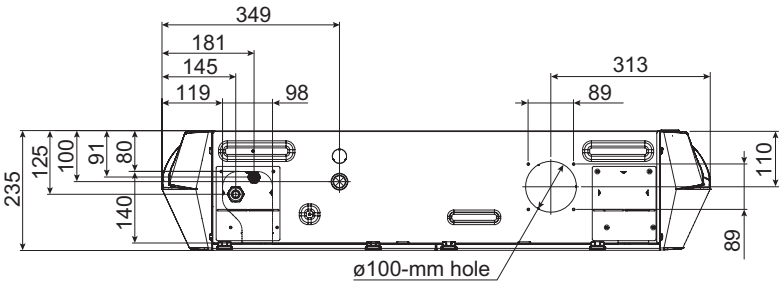

Rear view

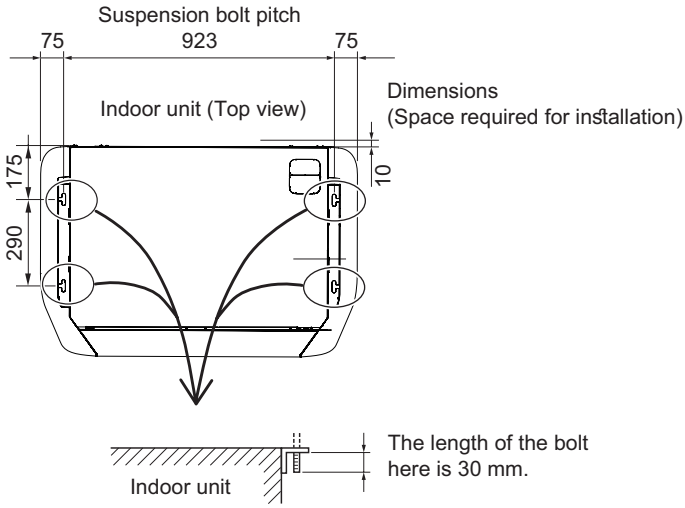

4-5 UNIT
MULTI-SPLIT TYPE

■ Installation space requirement

Unit: mm

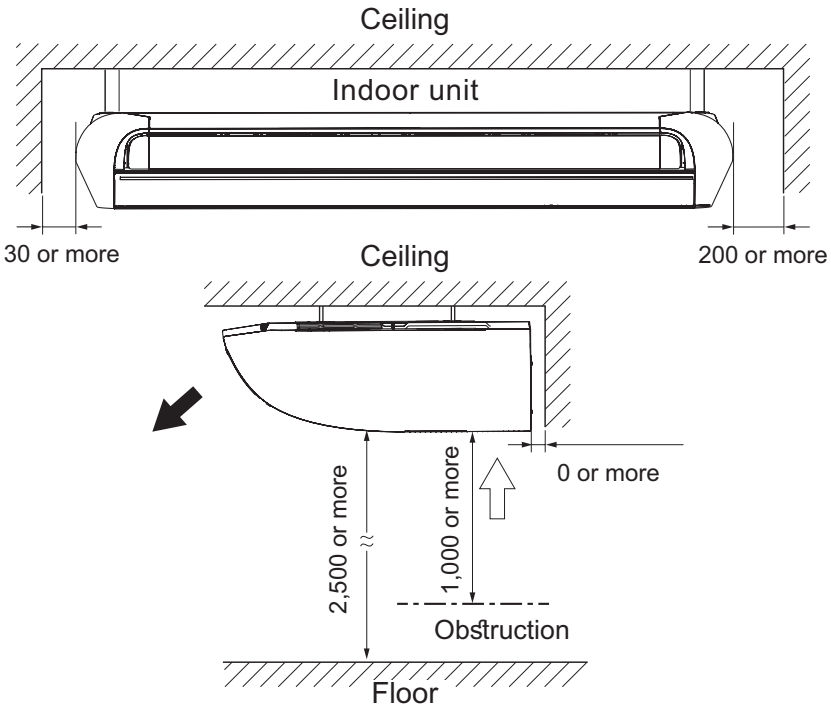

Required ceiling height varies according to the ceiling mode setting of function setting No. 20.

Ceiling height (mm)		
Ceiling mode	Standard	High ceiling
18, 22 models	2,700	3,500

4-5 UNIT
MULTI-SPLIT TYPE

4-7. Floor type

■ Models: AGEG09–14KVCA

Unit: mm

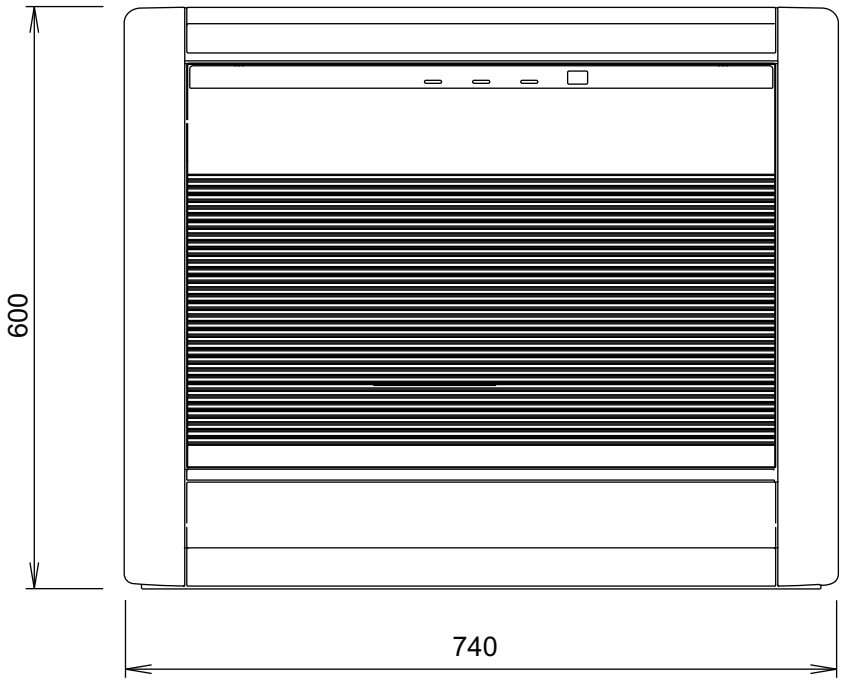

Front view

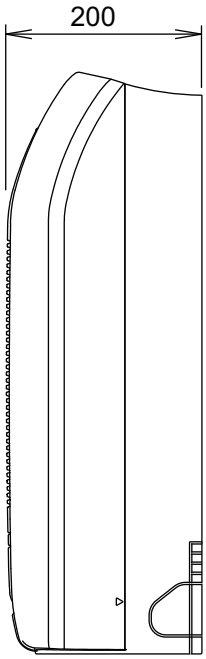

Side view

4-5 UNIT
MULTI-SPLIT TYPE

● Installation space

Unit: mm

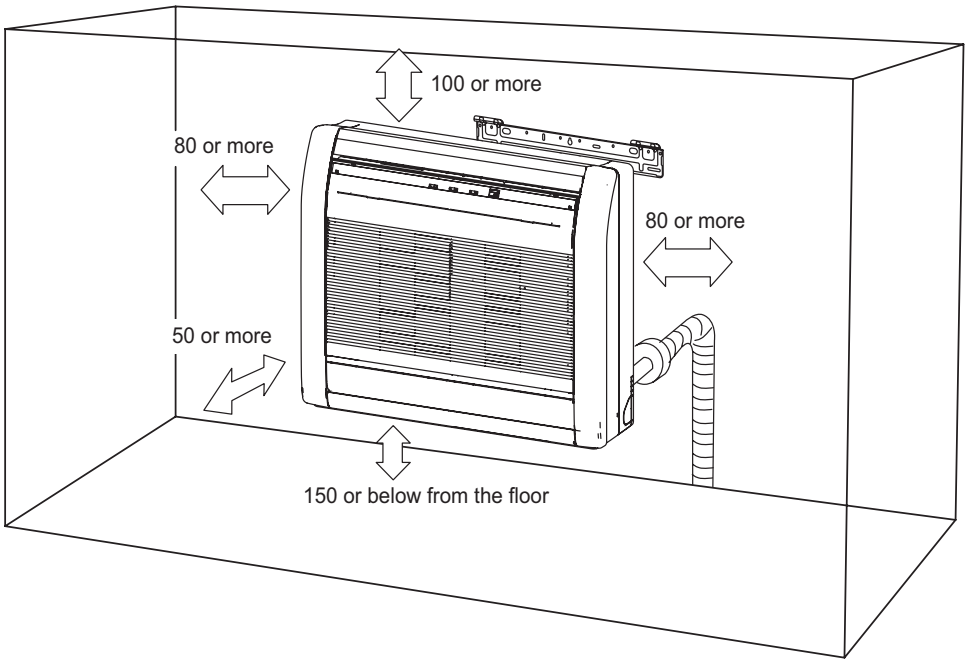

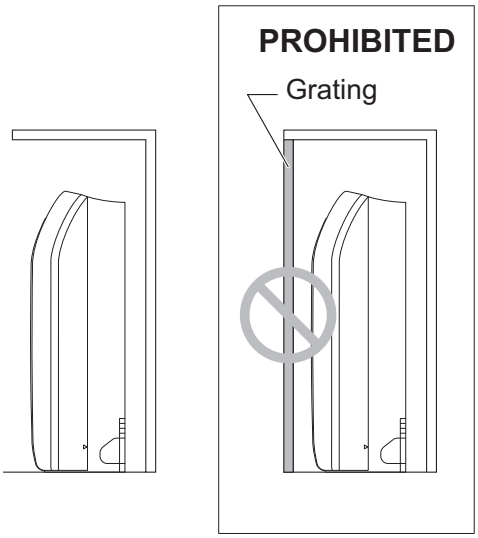

⚠ WARNING

- The appliance shall be installed, operated and stored in a room with a floor area larger than X m^2.

Amount of refrigerant charge M (kg)	Minimum room area X (m^2)
M ≤ 1.22	-
1.22 < M ≤ 1.23	12.99
1.23 < M ≤ 1.50	19.31
1.50 < M ≤ 1.75	26.28
1.75 < M ≤ 2.0	34.33
2.0 < M ≤ 2.5	53.63
2.5 < M ≤ 3.0	77.23
3.0 < M ≤ 3.5	105.12
3.5 < M ≤ 4.0	137.29

(IEC 60335-2-40)

5. Wiring diagrams

5-1. Compact cassette type

■ Models: AUXG07–22KVLA

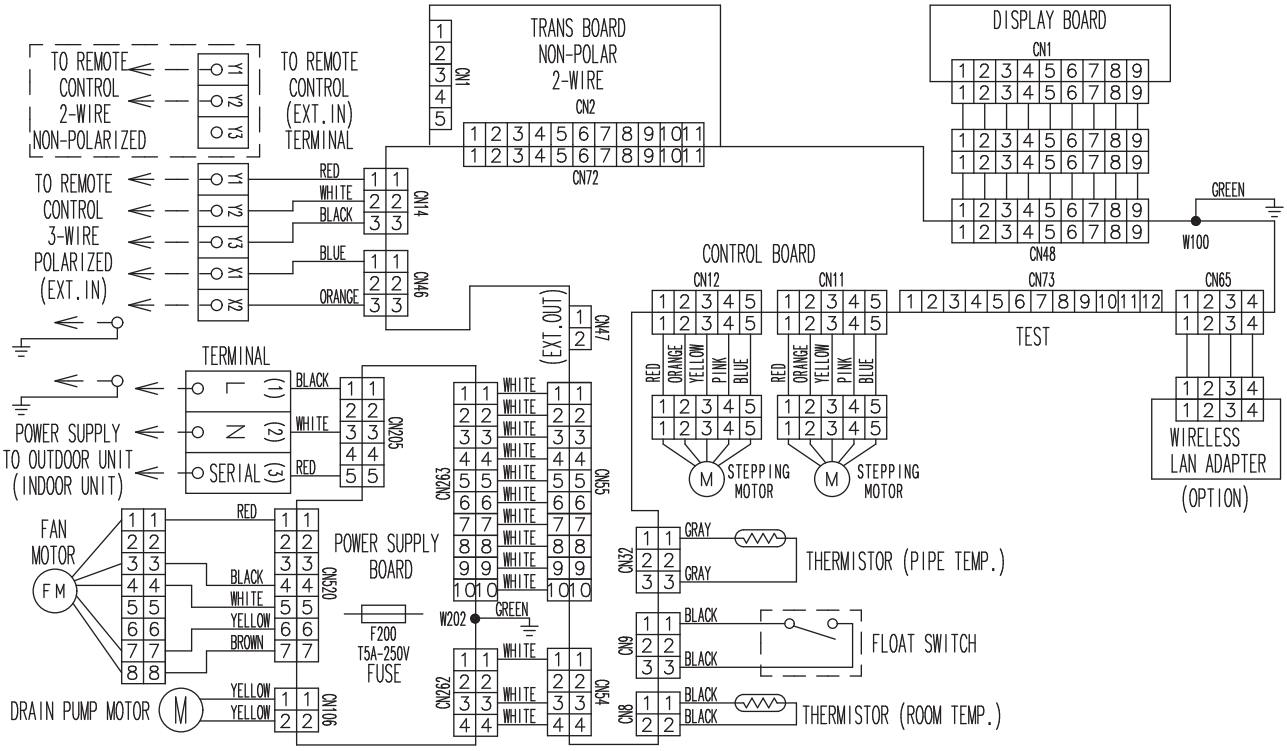

5-2. Mini duct type and Slim duct type

■ Models: ARXG07–18KSLAP and ARXG07–18KLLAP

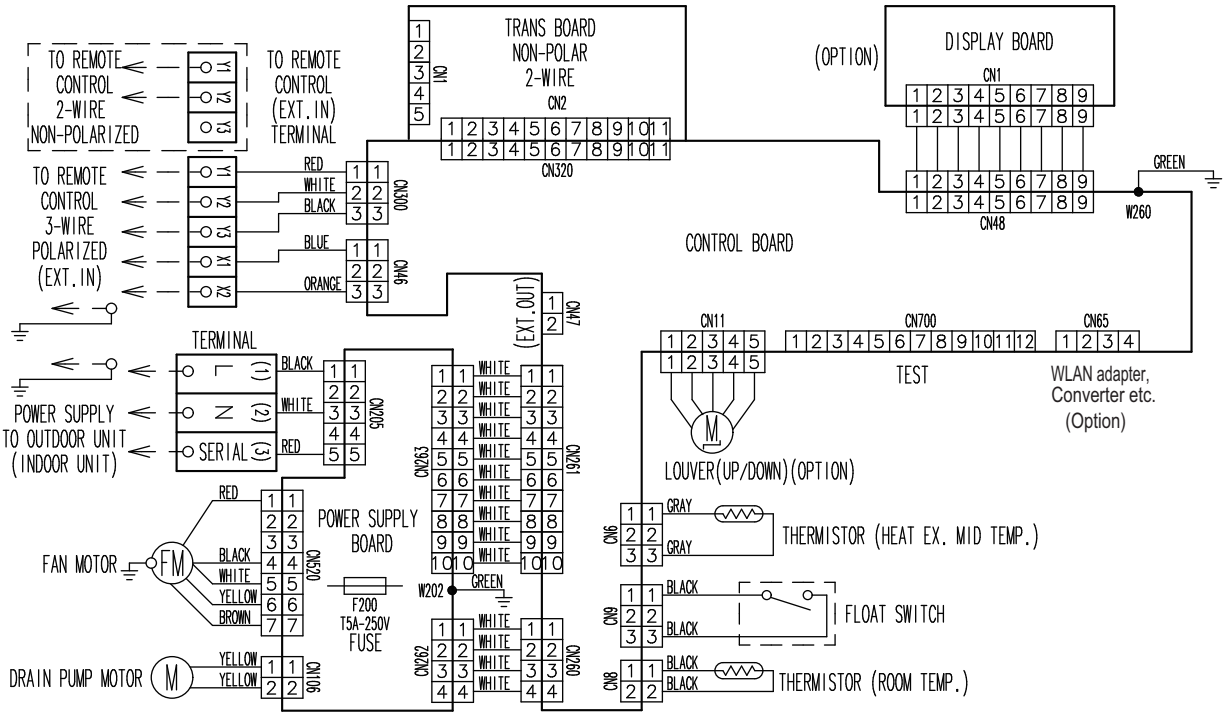

5-3. Medium static pressure duct type

■ Model: ARXG22KMLB

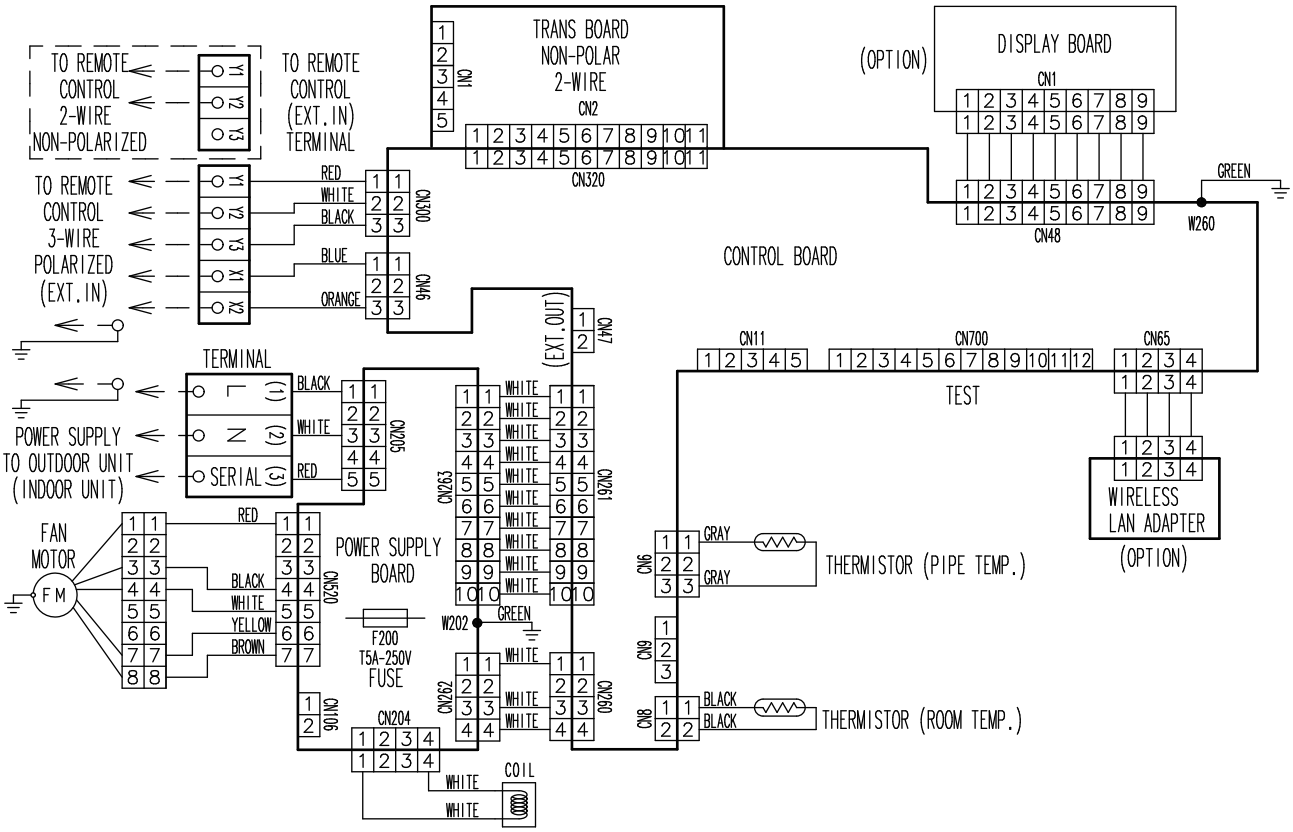

■ Models: ARXH12–22KMTAP

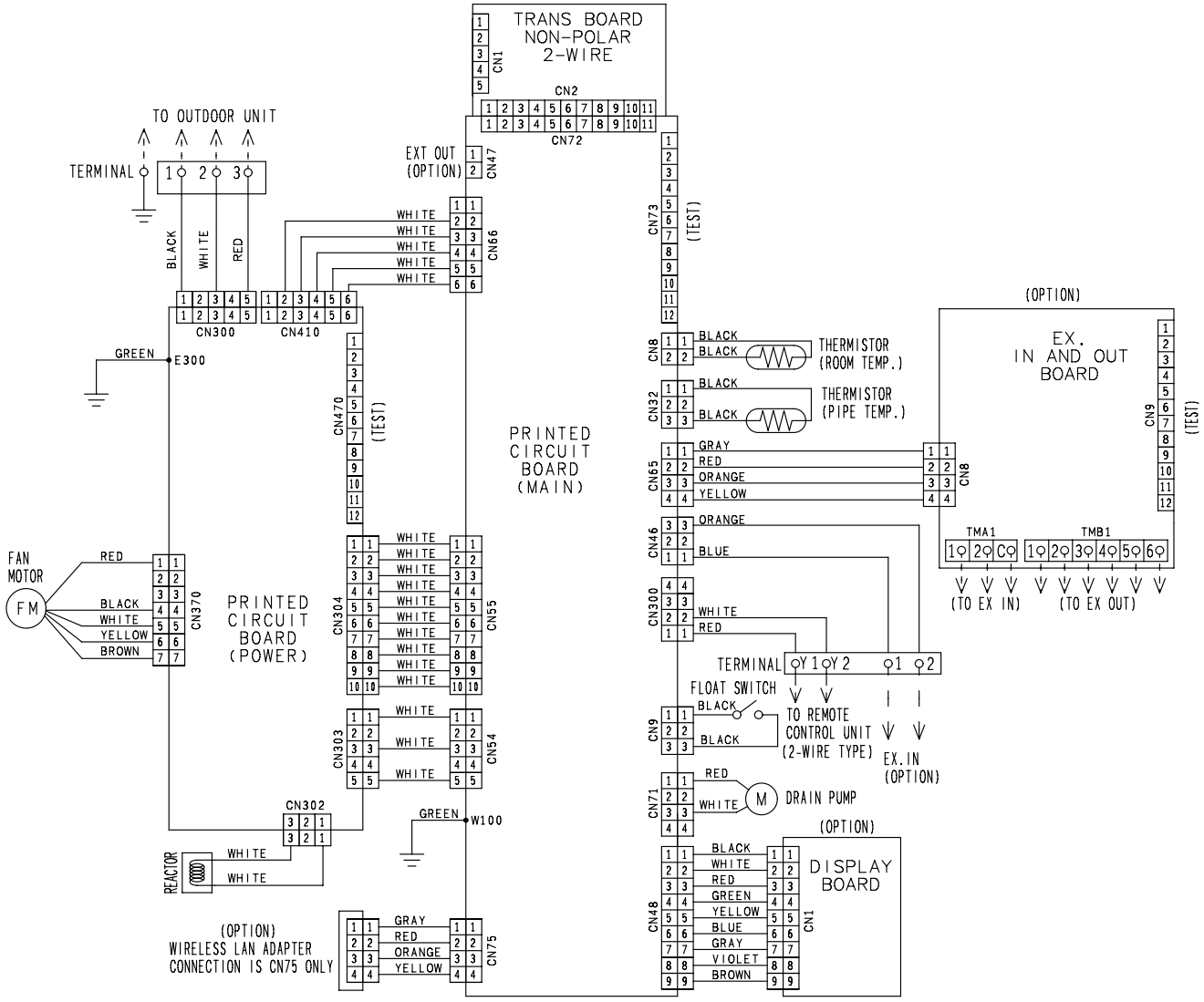

5-4. Wall mounted type

■ Models: ASEH07–14KMCG and ASEH07–14KMCG-B

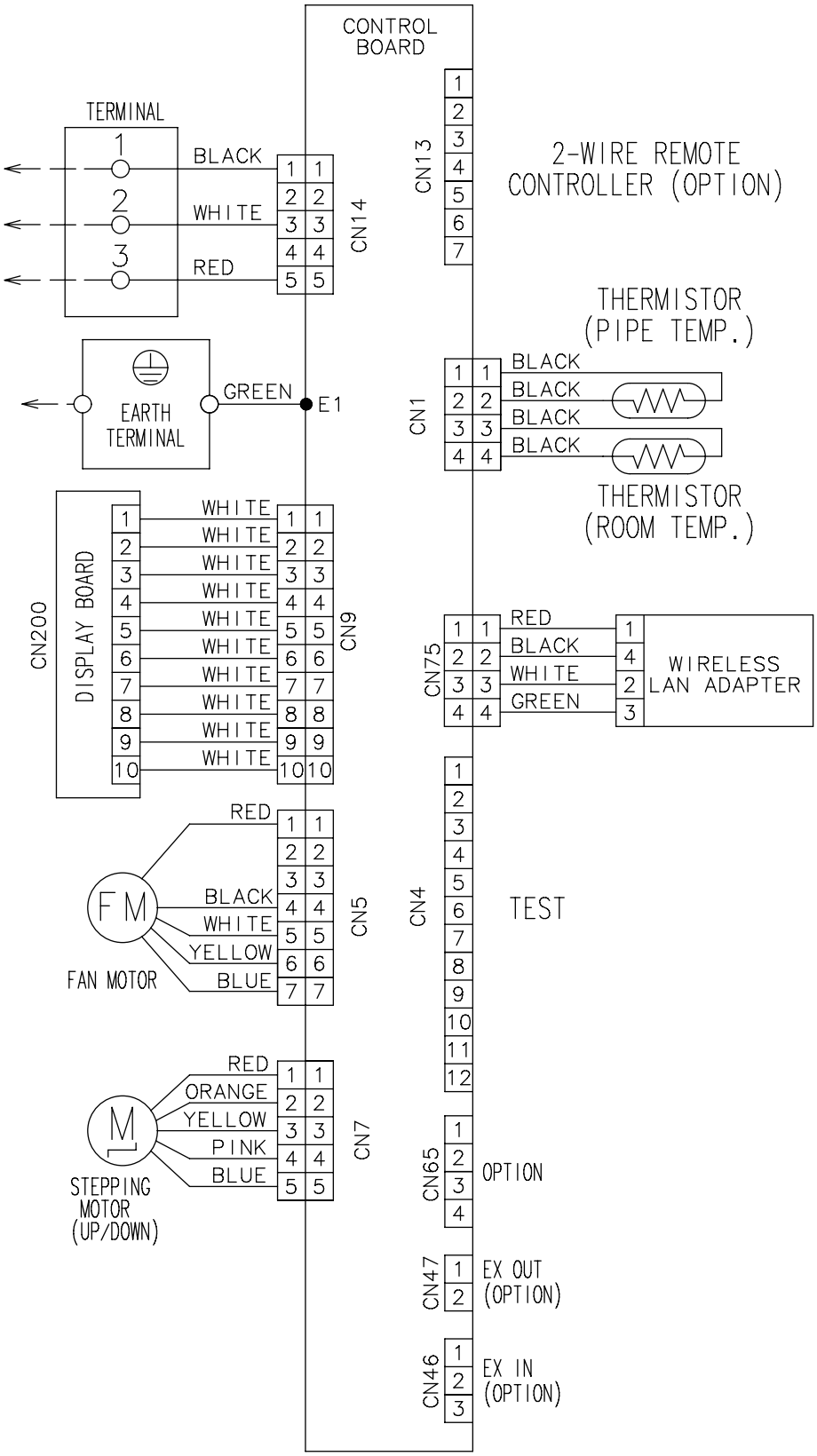

4-5 UNIT
MULTI-SPLIT TYPE

■ Models: ASEG07–14KETF and ASEG07–14KETF-B

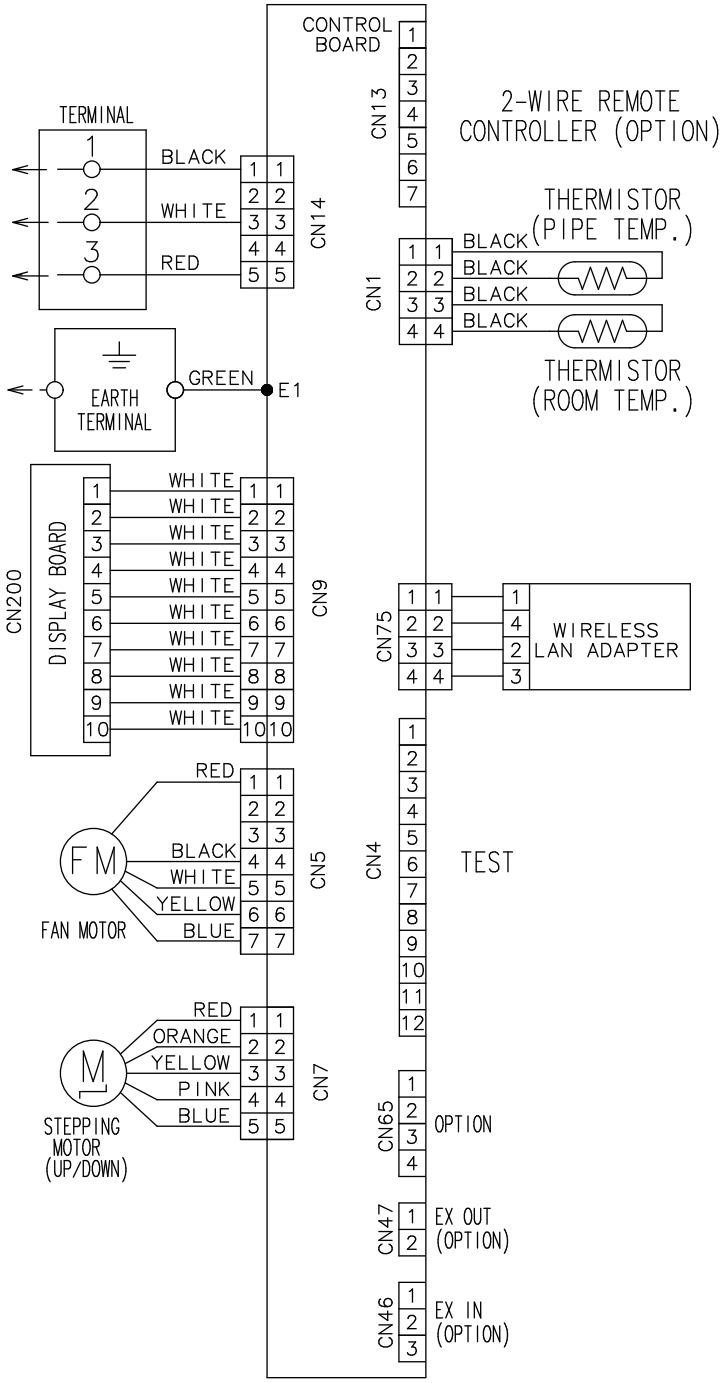

4-5 UNIT
MULTI-SPLIT TYPE

■ Models: ASEH07–14KGTG

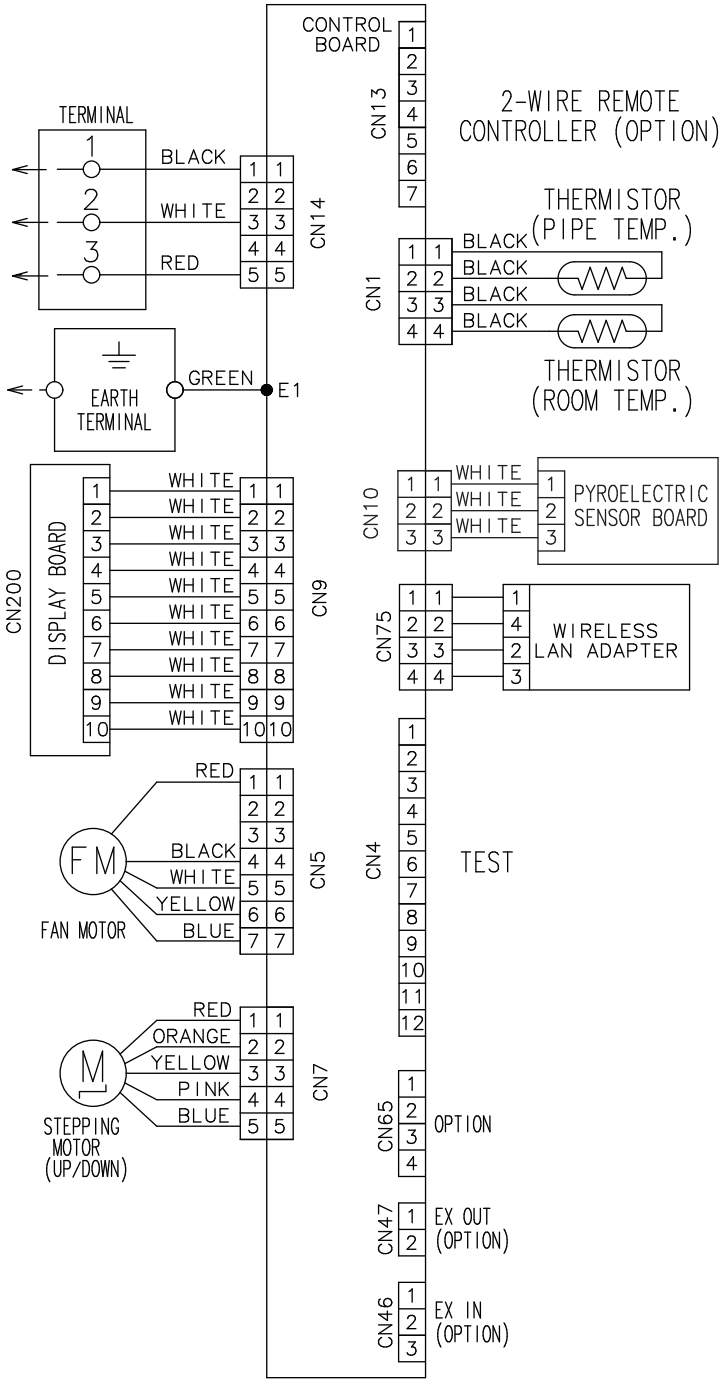

4-5 UNIT
MULTI-SPLIT TYPE

■ Models: ASEH05–12KNCA

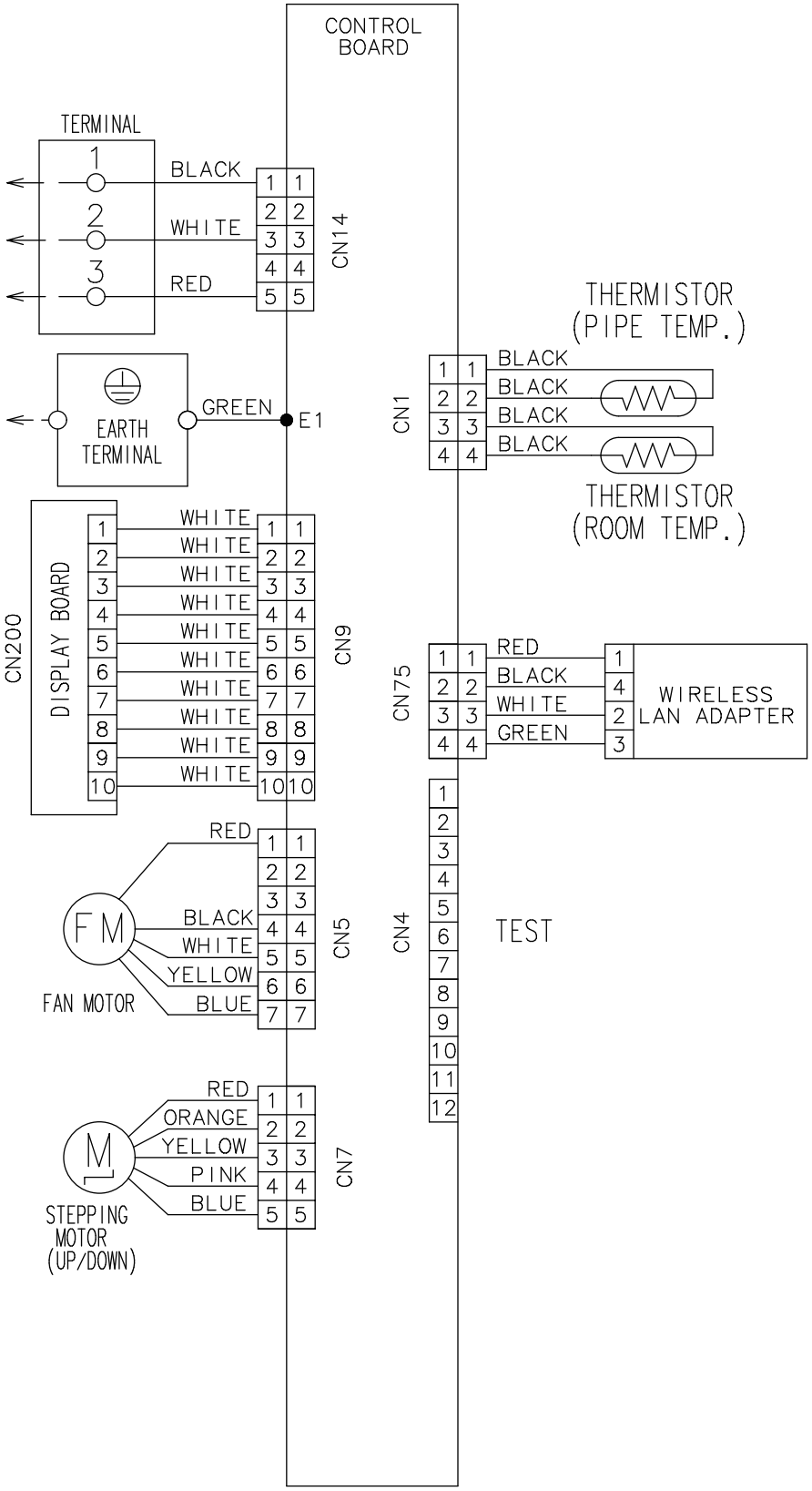

■ Models: ASEG18–24KMTE

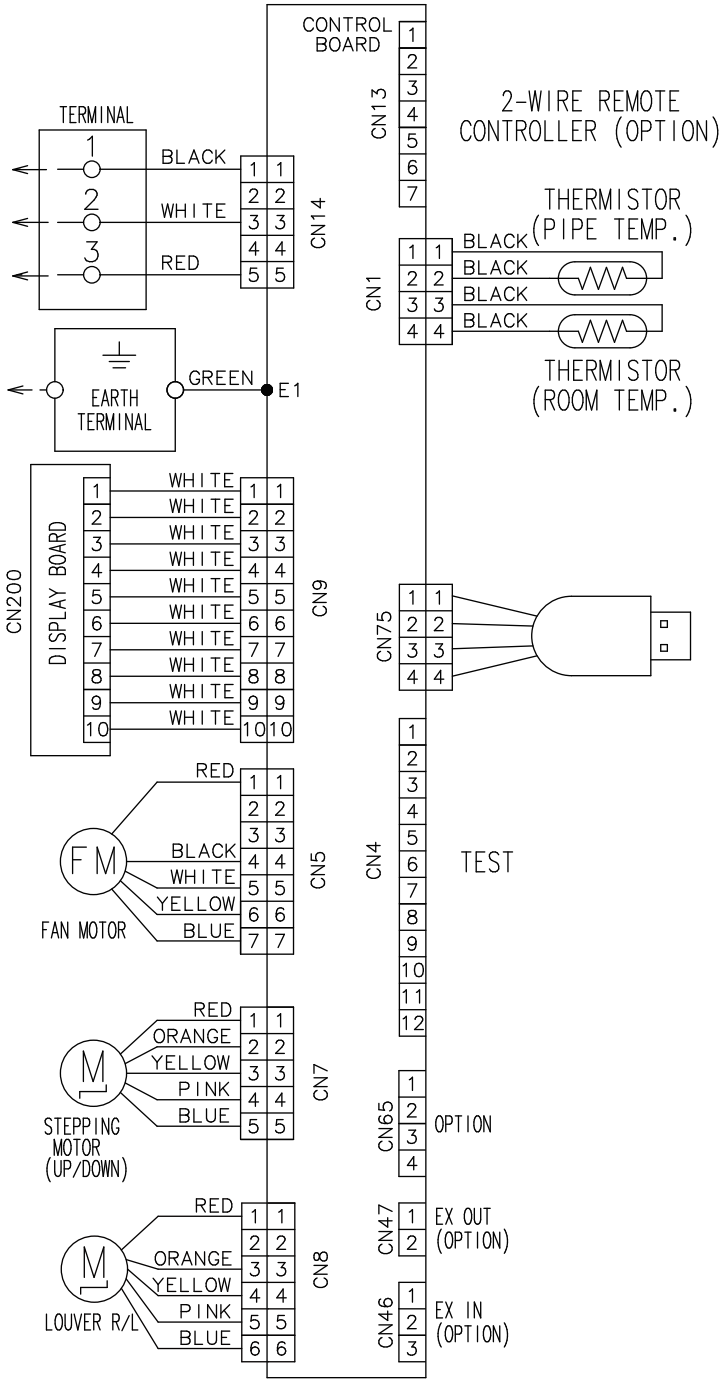

5-5. Ceiling type

■ Models: ABEG18–22KRTA

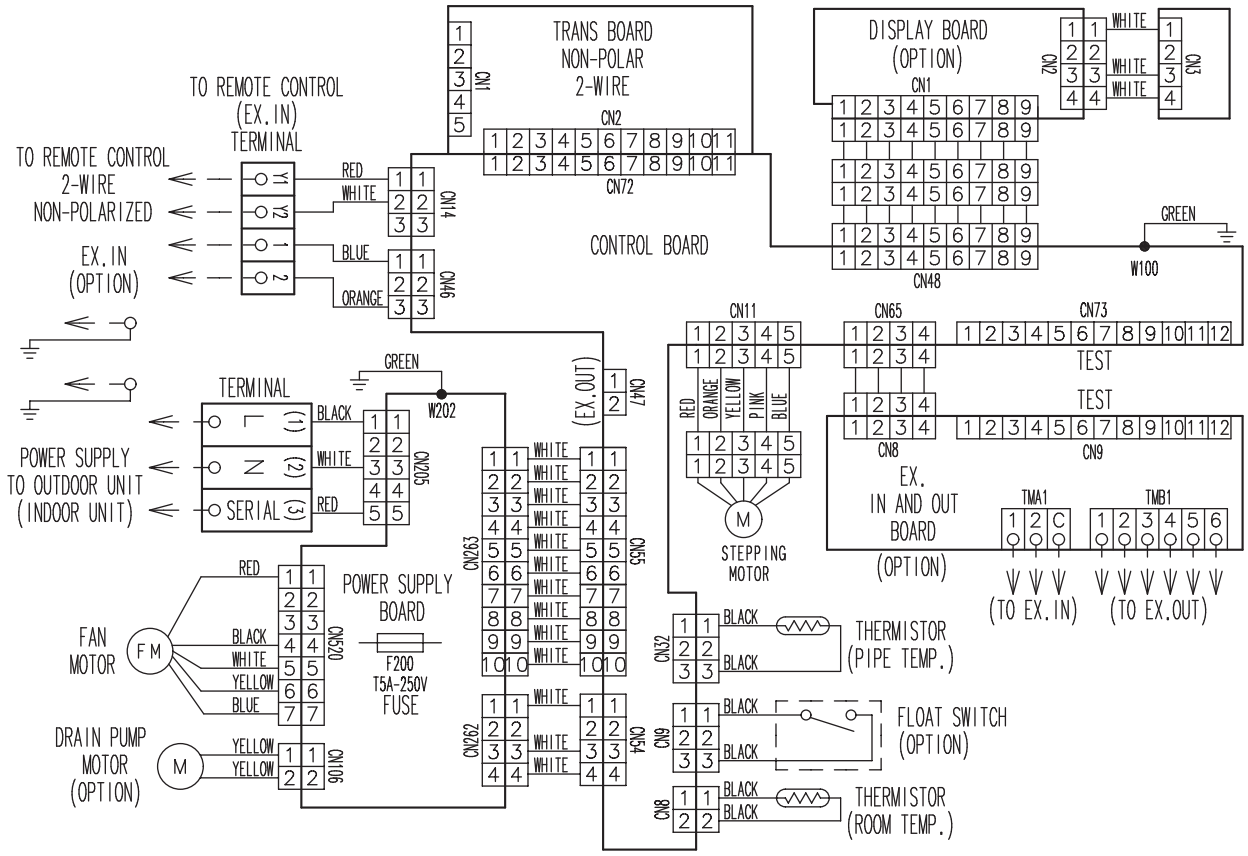

5-6. Floor type

■ Models: AGEG09–14KVCA

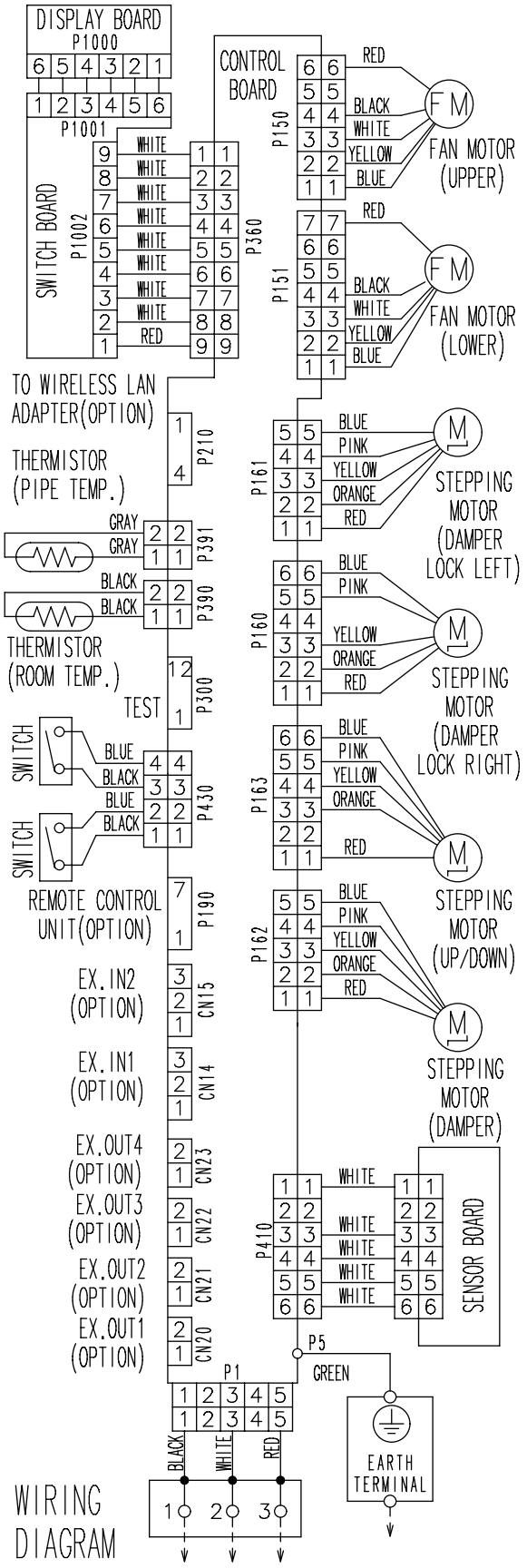

6. Air velocity and temperature distributions

6-1. Compact cassette type

■ Models: AUXG07–09KVLA

- Air velocity distribution

Measuring conditions	Fan speed	Operation mode
	HIGH	FAN

Top view
Horizontal louver: Up

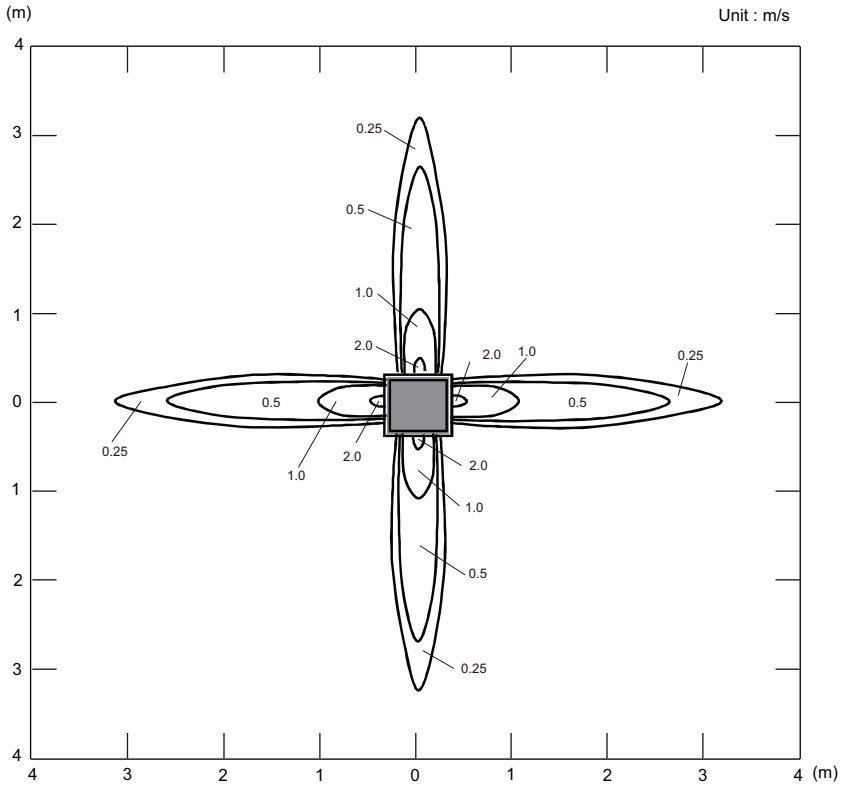

Side view
Horizontal louver: Up

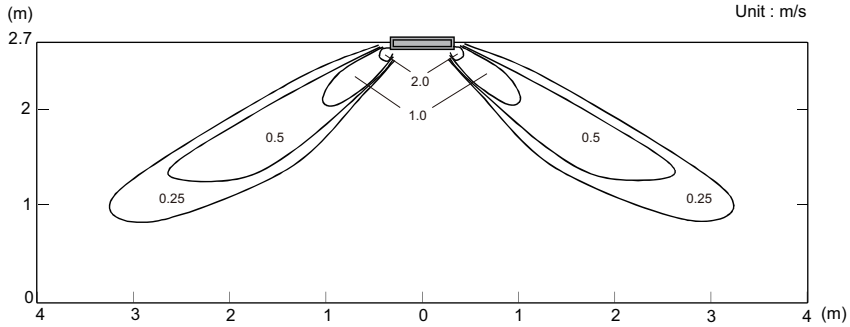

- Air velocity distribution

Measuring conditions **NOTE:** Reference data	Fan speed	Operation mode	Outlet directions
	HIGH	HEAT	4-way air outlet

Side view
Horizontal louver: Down

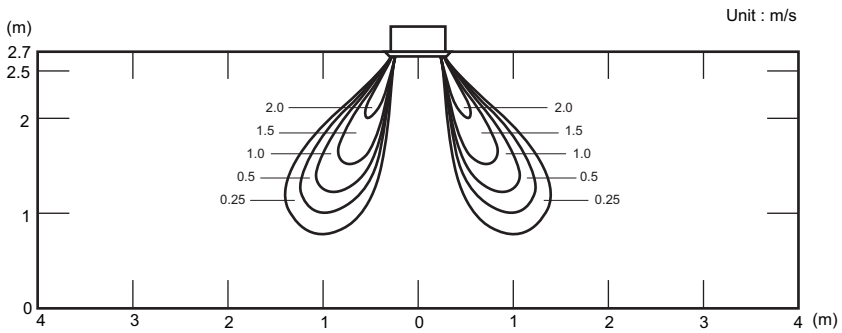

- Air temperature distribution

Measuring conditions **NOTE:** Reference data	Fan speed	Operation mode	Outlet directions
	HIGH	HEAT	4-way air outlet

Side view
Horizontal louver: Down

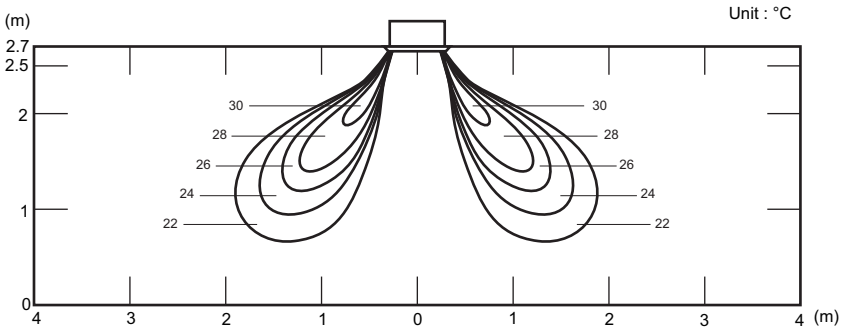

■ Model: AUXG12KVLA

- Air velocity distribution

Measuring conditions	Fan speed	Operation mode
	HIGH	FAN

Top view
Horizontal louver: Up

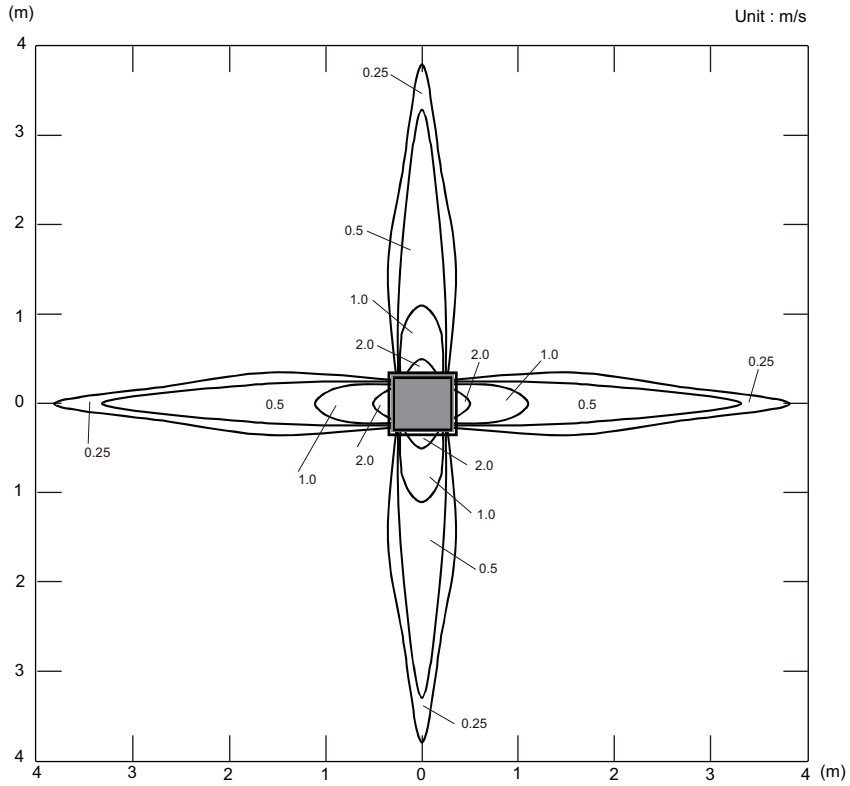

Side view
Horizontal louver: Up

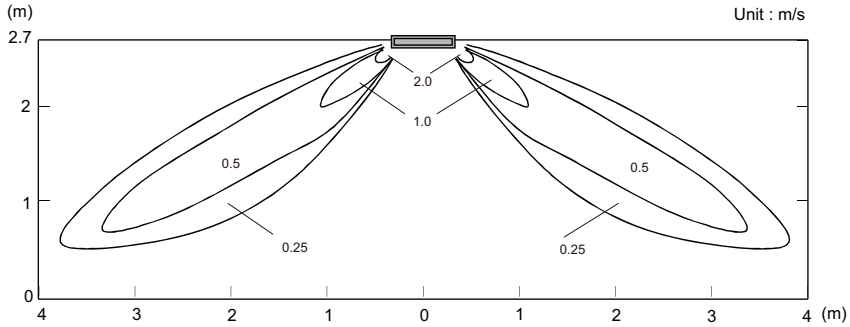

- Air velocity distribution

Measuring conditions **NOTE:** Reference data	Fan speed	Operation mode	Outlet directions
	HIGH	HEAT	4-way air outlet

Side view
Horizontal louver: Down

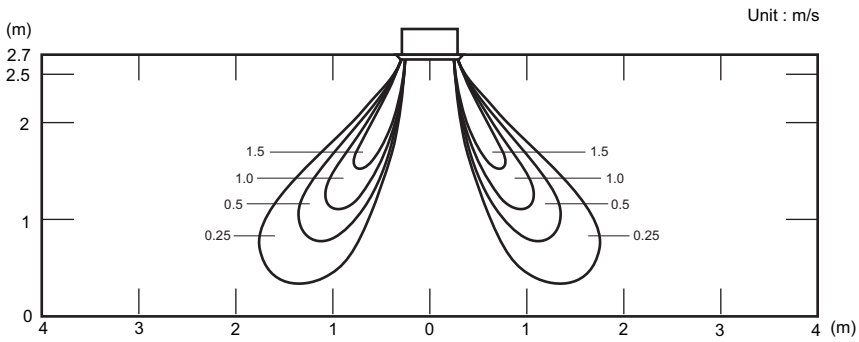

- Air temperature distribution

Measuring conditions **NOTE:** Reference data	Fan speed	Operation mode	Outlet directions
	HIGH	HEAT	4-way air outlet

Side view
Horizontal louver: Down

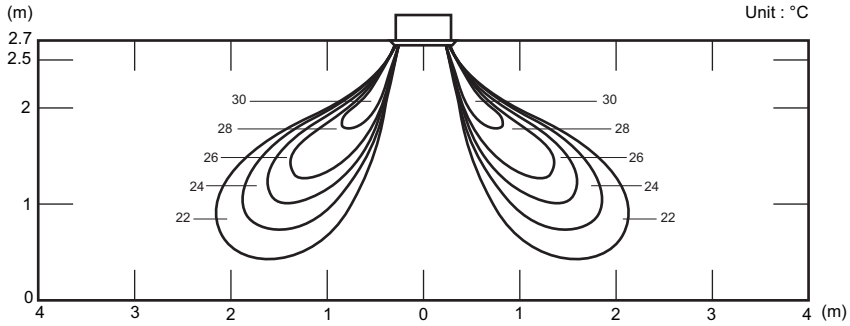

■ Model: AUXG14KVLA

- Air velocity distribution

Measuring conditions	Fan speed	Operation mode
	HIGH	FAN

Top view
Horizontal louver: Up

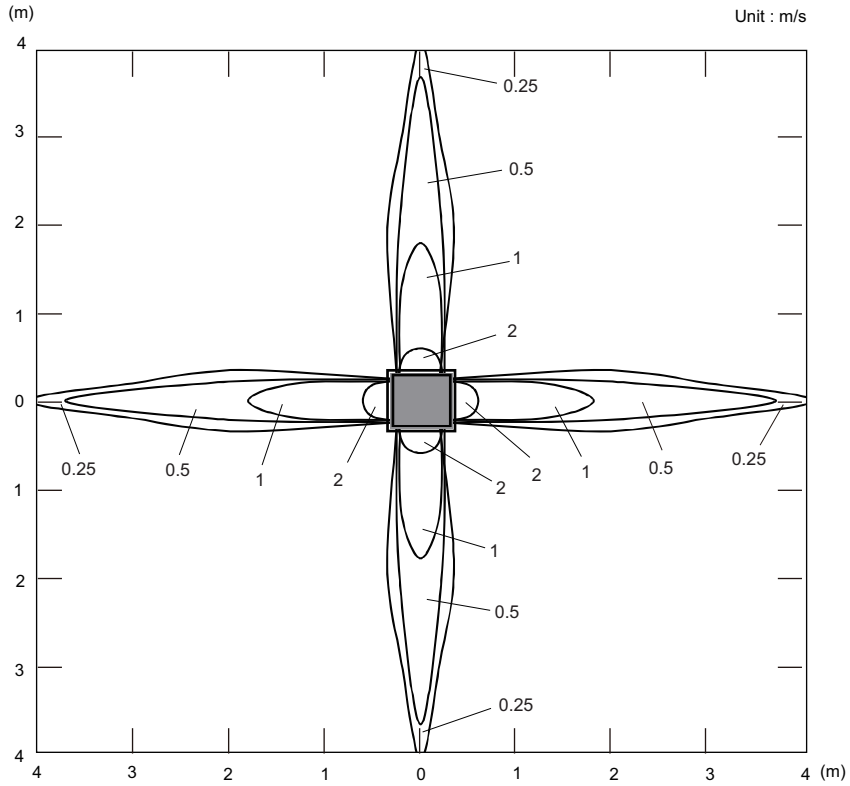

Side view
Horizontal louver: Up

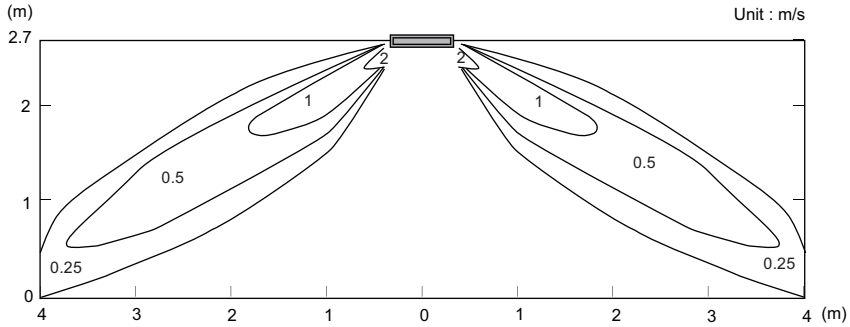

- Air velocity distribution

Measuring conditions **NOTE:** Reference data	Fan speed	Operation mode	Outlet directions
	HIGH	HEAT	4-way air outlet

Side view
Horizontal louver: Down

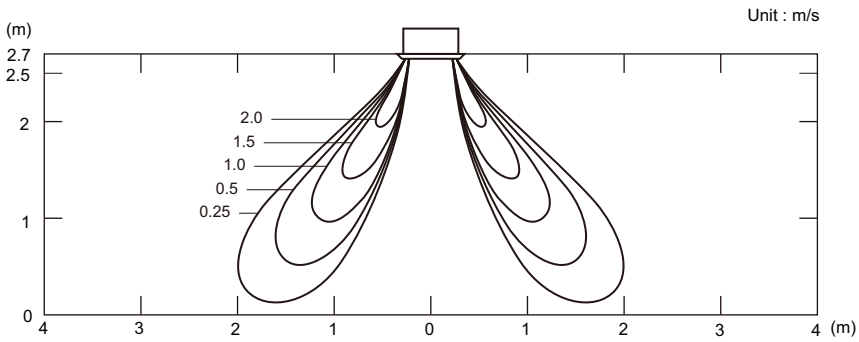

- Air temperature distribution

Measuring conditions **NOTE:** Reference data	Fan speed	Operation mode	Outlet directions
	HIGH	HEAT	4-way air outlet

Side view
Horizontal louver: Down

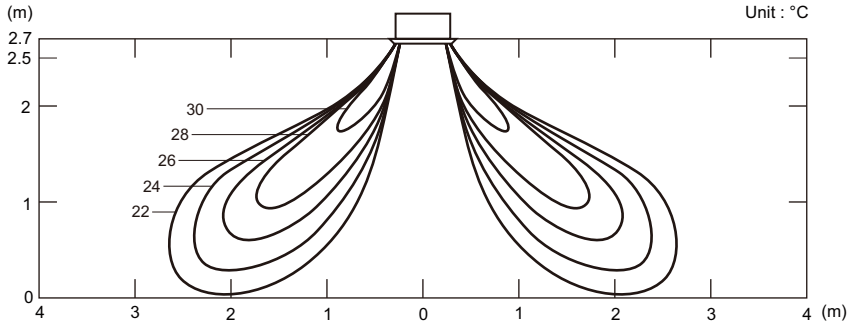

■ Model: AUXG18KVLA

Measuring conditions	Fan speed	Operation mode	Ceiling mode
	HIGH	FAN	STANDARD

Top view
Horizontal louver: Up

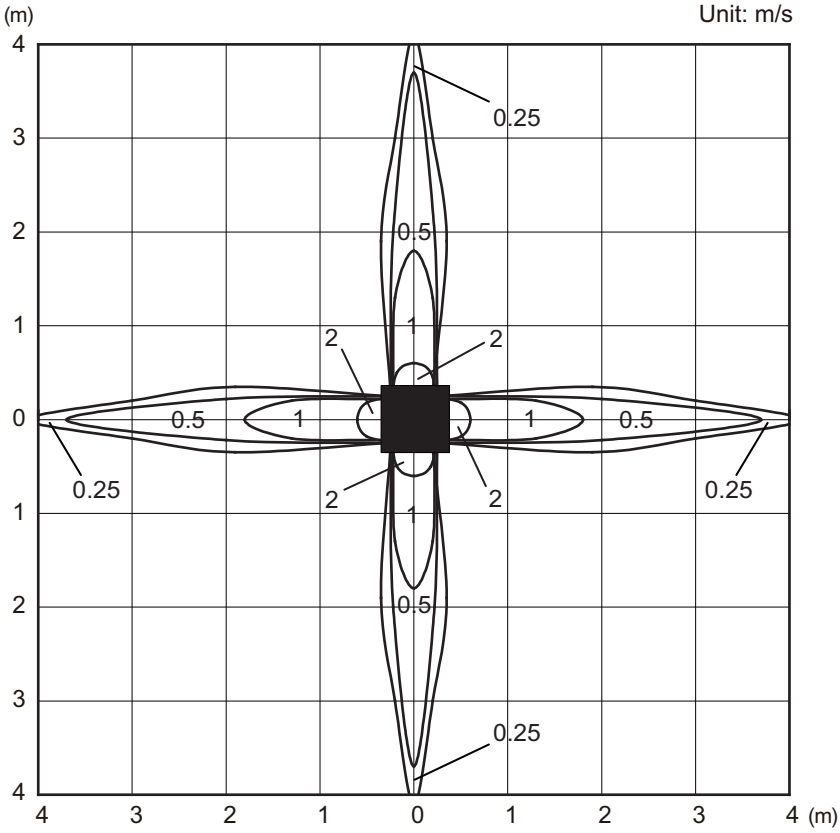

Side view
Horizontal louver: Up

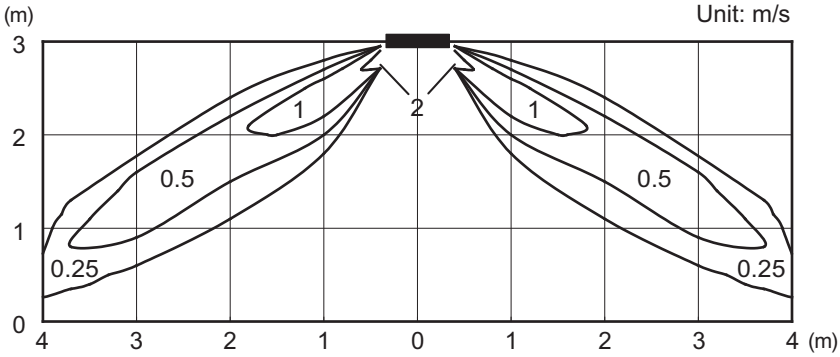

Side view
Horizontal louver: Down

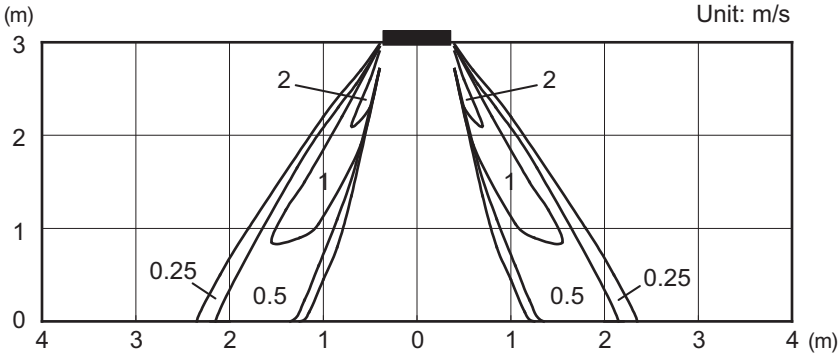

■ Model: AUXG22KVLA

Measuring conditions	Fan speed	Operation mode	Ceiling mode
	HIGH	FAN	STANDARD

Top view
Horizontal louver: Up

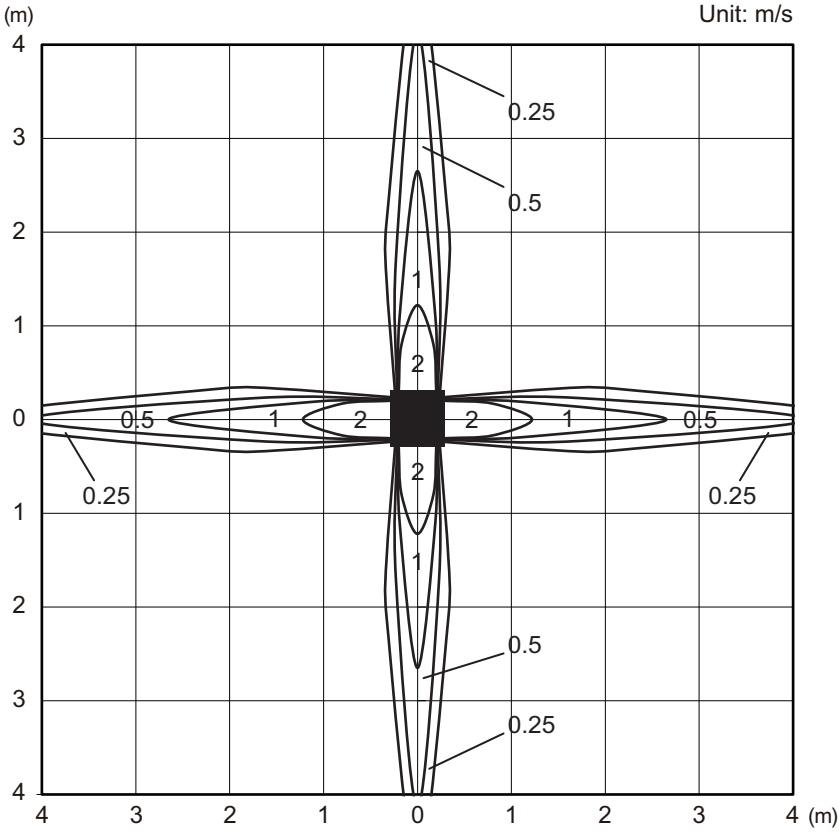

Side view
Horizontal louver: Up

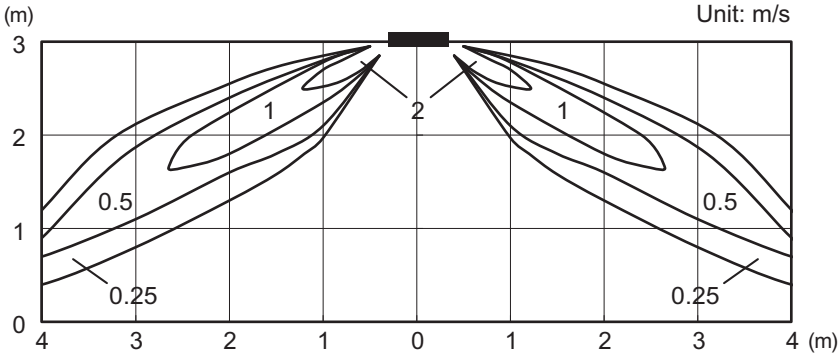

Side view
Horizontal louver: Down

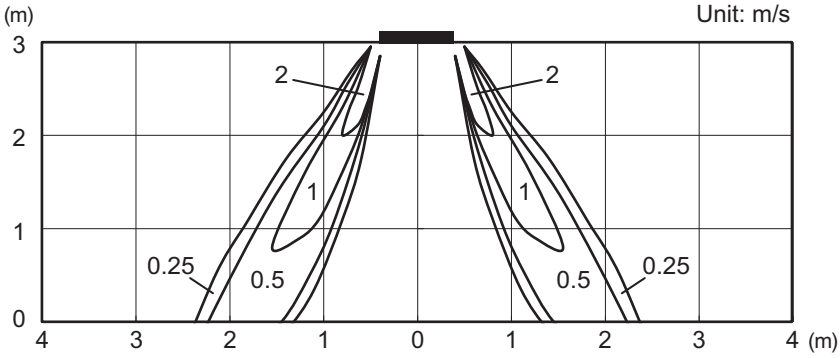

6-2. Mini duct type

■ Model: ARXG07KSLAP

NOTE: This data is measured after installing optional Auto louver grille kit.

- Air velocity distribution

Measuring conditions	Fan speed	Operation mode
	HIGH	FAN

Top view
Horizontal louver: Up
Vertical louver: Center

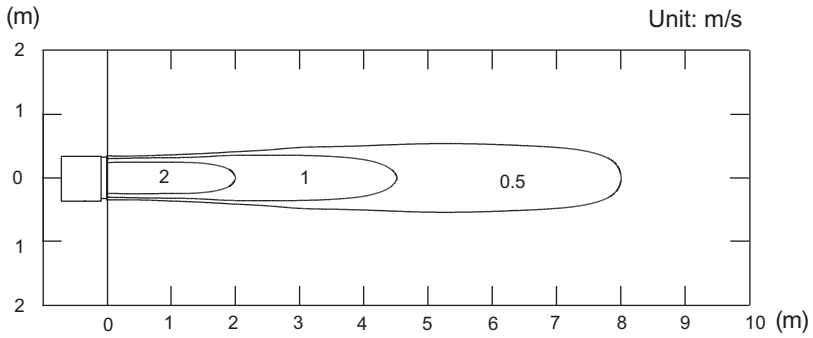

Top view
Horizontal louver: Up
Vertical louver: Left & Right

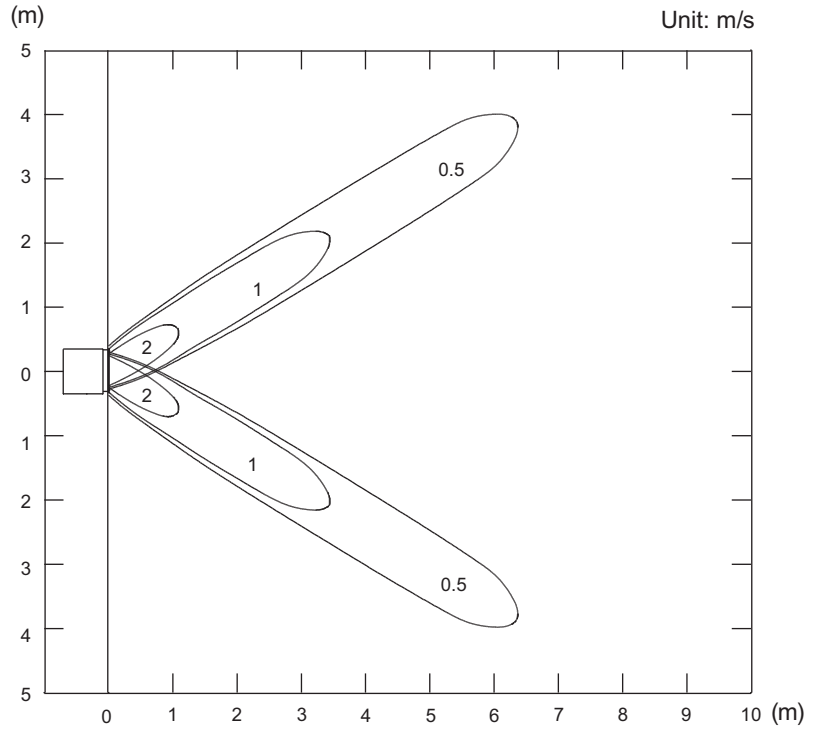

Side view
Horizontal louver: Up
Vertical louver: Center

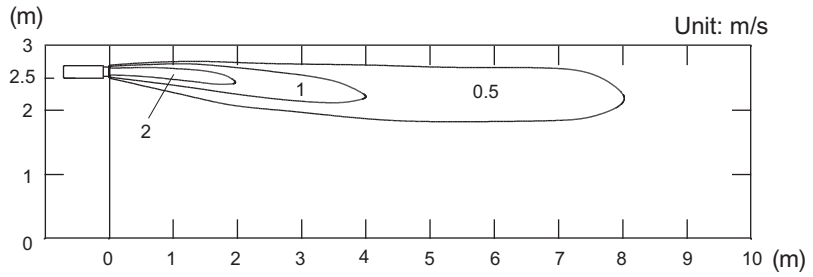

- Air velocity distribution

Measuring conditions	Fan speed	Operation mode
	HIGH	HEAT

Side view
Horizontal louver: Down
Vertical louver: Center

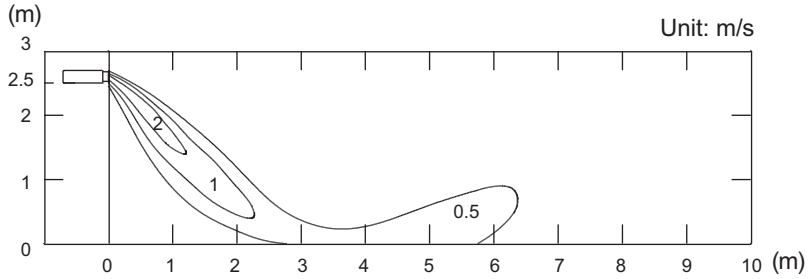

- Air temperature distribution

Measuring conditions	Fan speed	Operation mode
	HIGH	HEAT

Side view
Horizontal louver: Down
Vertical louver: Center

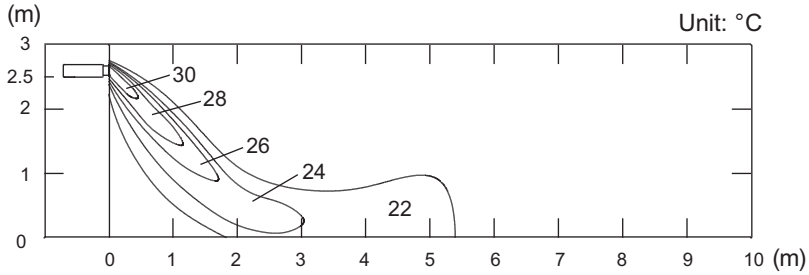

■ Model: ARXG09KSLAP

NOTE: This data is measured after installing optional Auto Louver Grille Kit.

- Air velocity distribution

Measuring conditions	Fan speed	Operation mode
	HIGH	FAN

Top view
Horizontal louver: Up
Vertical louver: Center

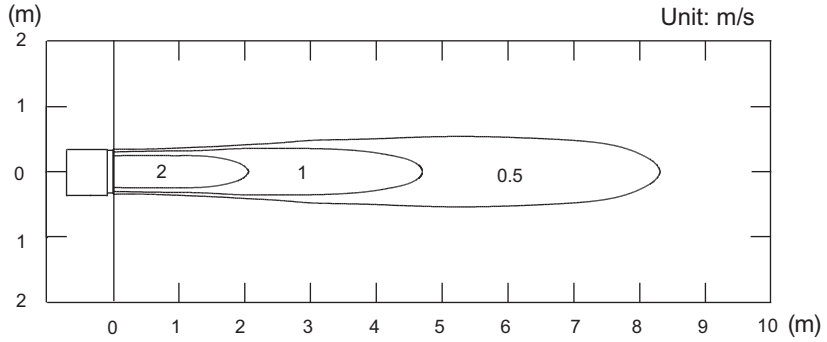

Top view
Horizontal louver: Up
Vertical louver: Left & Right

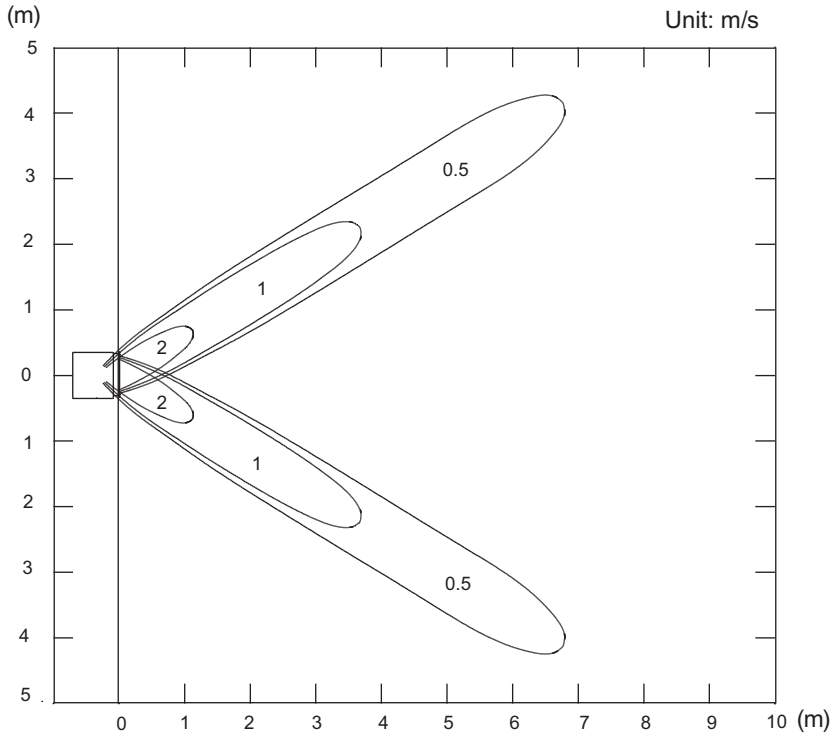

Side view
Horizontal louver: Up
Vertical louver: Center

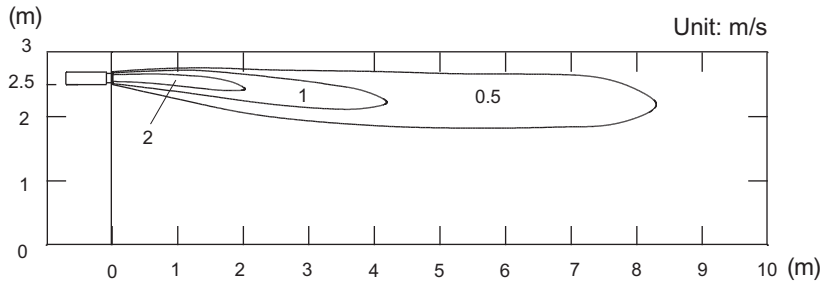

- Air velocity distribution

Measuring conditions	Fan speed	Operation mode
	HIGH	HEAT

Side view
Horizontal louver: Down
Vertical louver: Center

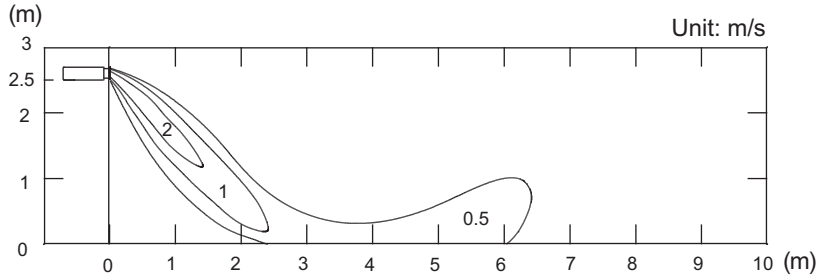

- Air temperature distribution

Measuring conditions	Fan speed	Operation mode
	HIGH	HEAT

Side view
Horizontal louver: Down
Vertical louver: Center

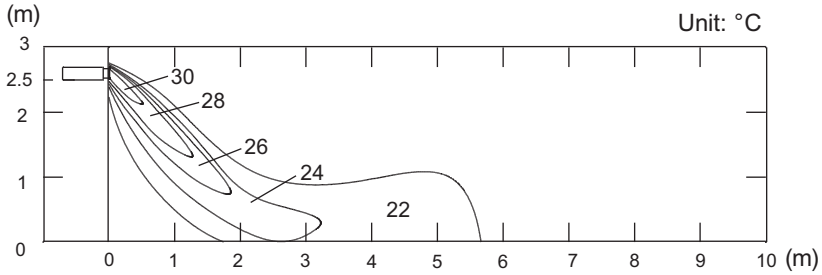

■ Model: ARXG12KSLAP

NOTE: This data is measured after installing optional Auto Louver Grille Kit.

- Air velocity distribution

Measuring conditions	Fan speed	Operation mode
	HIGH	FAN

Top view
Horizontal louver: Up
Vertical louver: Center

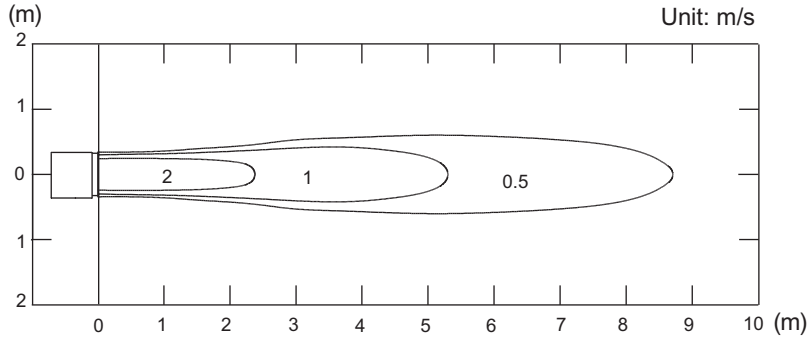

Top view
Horizontal louver: Up
Vertical louver: Left & Right

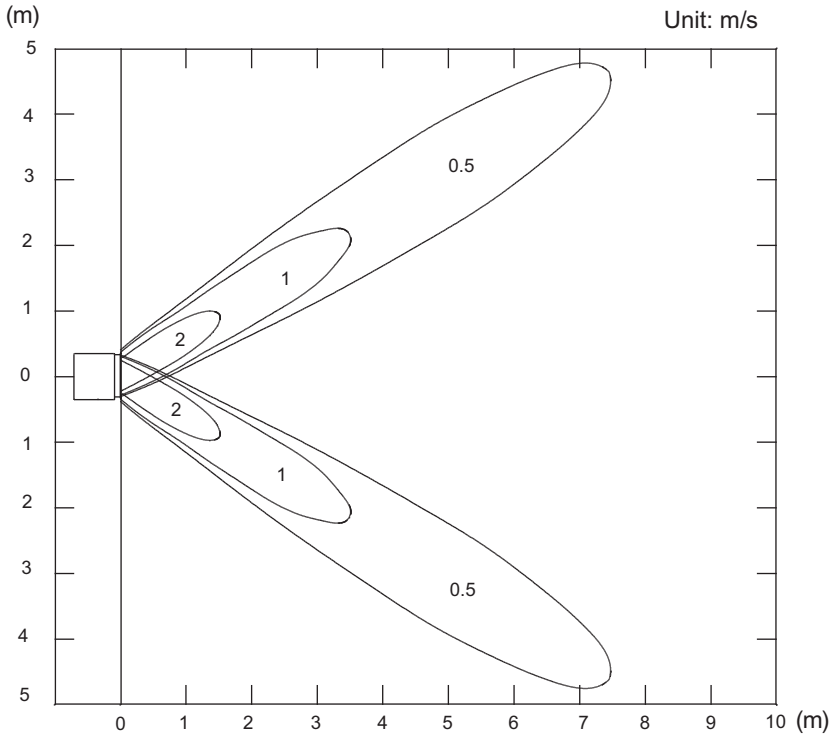

Side view
Horizontal louver: Up
Vertical louver: Center

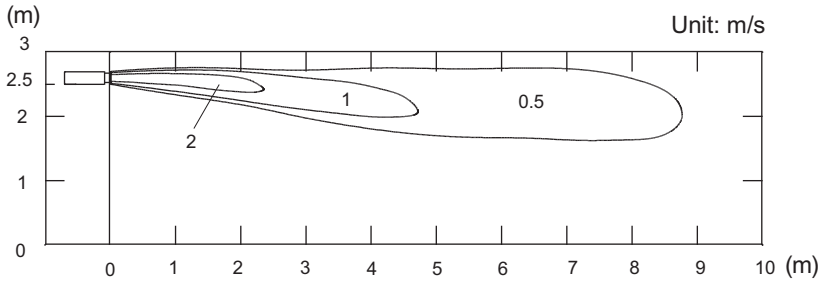

- Air velocity distribution

Measuring conditions	Fan speed	Operation mode
	HIGH	HEAT

Side view
Horizontal louver: Down
Vertical louver: Center

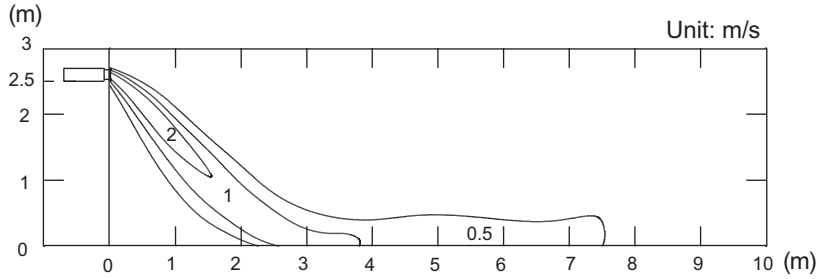

- Air temperature distribution

Measuring conditions	Fan speed	Operation mode
	HIGH	HEAT

Side view
Horizontal louver: Down
Vertical louver: Center

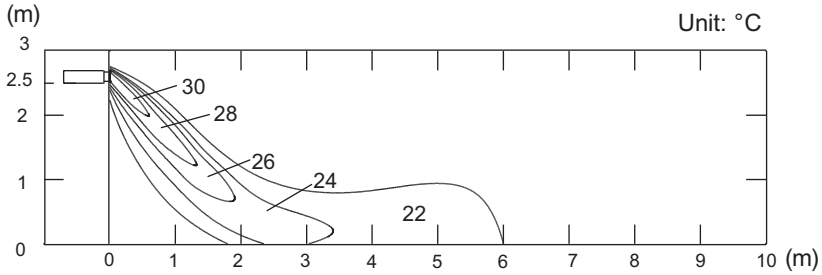

4-5 UNIT
MULTI-SPLIT TYPE

■ Model: ARXG14KSLAP

NOTE: This data is measured after installing optional Auto louver grille kit.

- Air velocity distribution

Measuring conditions	Fan speed	Operation mode
	HIGH	FAN

Top view
Horizontal louver: Up
Vertical louver: Center

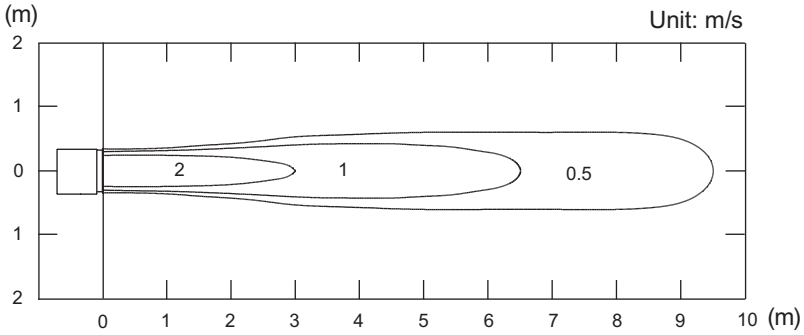

Top view
Horizontal louver: Up
Vertical louver: Left & Right

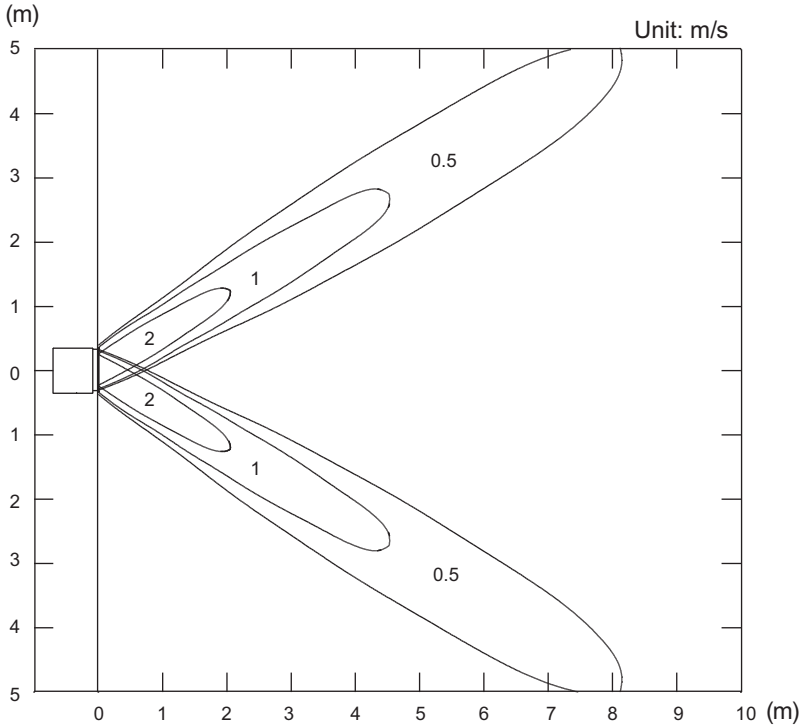

Side view
Horizontal louver: Up
Vertical louver: Center

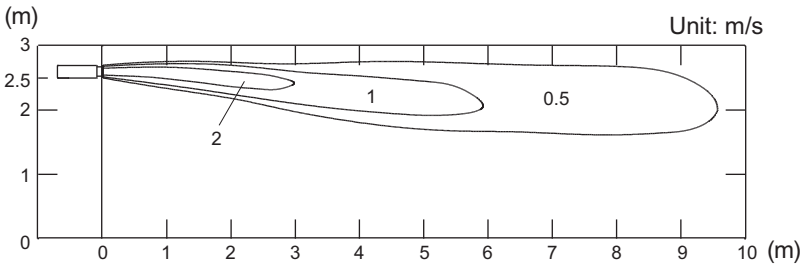

- Air velocity distribution

Measuring conditions	Fan speed	Operation mode
	HIGH	HEAT

Side view
Horizontal louver: Down
Vertical louver: Center

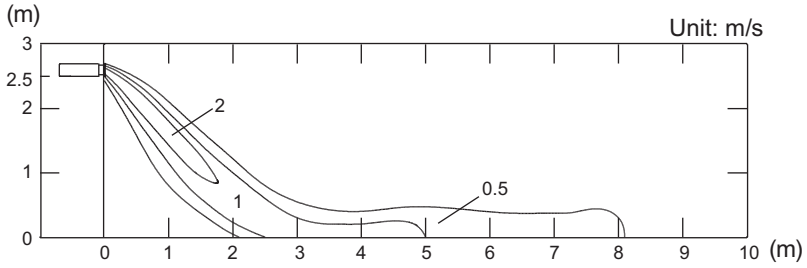

- Air temperature distribution

Measuring conditions	Fan speed	Operation mode
	HIGH	HEAT

Side view
Horizontal louver: Down
Vertical louver: Center

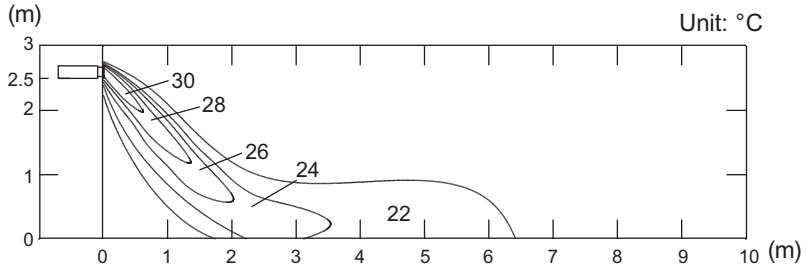

■ Model: ARXG18KSLAP

NOTE: This data is measured after installing optional Auto Louver Grille Kit.

- Air velocity distribution

Measuring conditions	Fan speed	Operation mode
	HIGH	FAN

Top view
Horizontal louver: Up
Vertical louver: Center

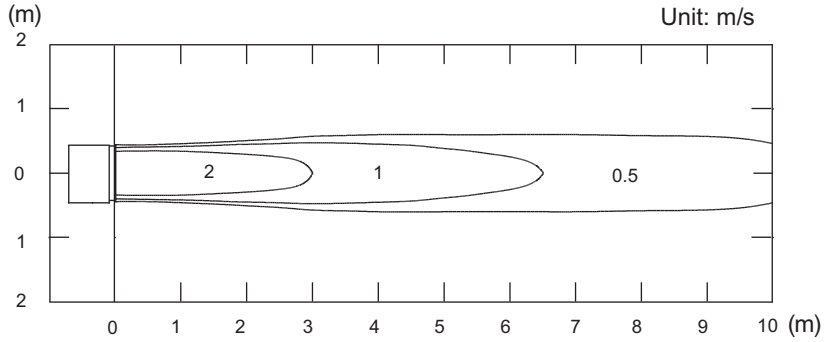

Top view
Horizontal louver: Up
Vertical louver: Left & Right

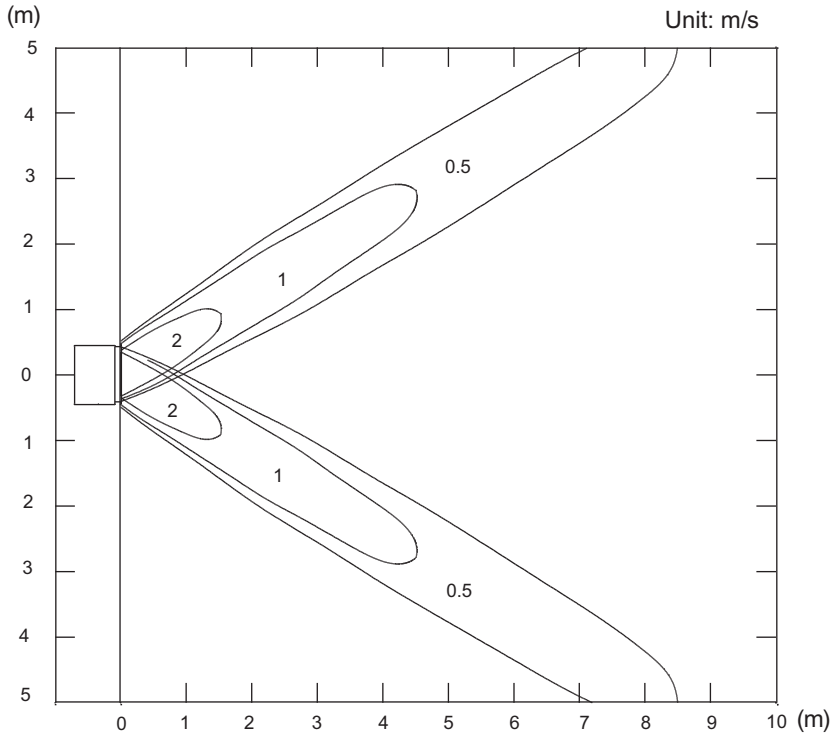

Side view
Horizontal louver: Up
Vertical louver: Center

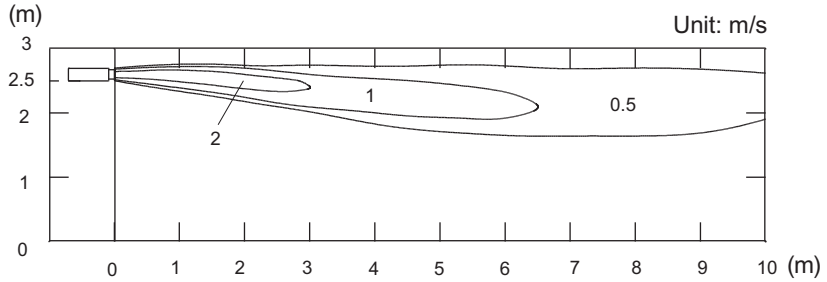

- Air velocity distribution

Measuring conditions	Fan speed	Operation mode
	HIGH	HEAT

Side view
Horizontal louver: Down
Vertical louver: Center

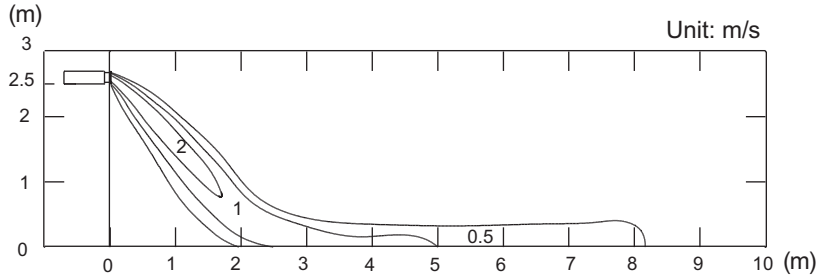

- Air temperature distribution

Measuring conditions	Fan speed	Operation mode
	HIGH	HEAT

Side view
Horizontal louver: Down
Vertical louver: Center

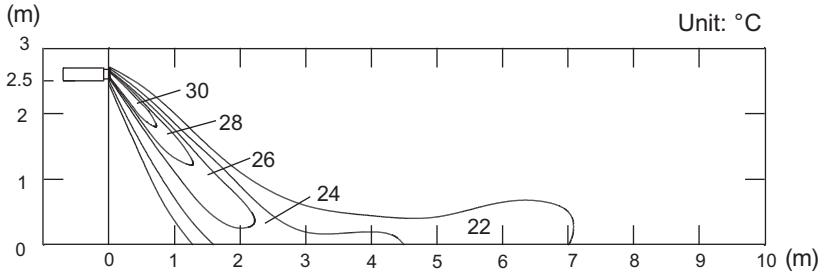

6-3. Slim duct type

■ Model: ARXG07KLLAP

NOTE: This data is measured after installing optional Auto louver grille kit.

- Air velocity distribution

Measuring conditions	Fan speed	Operation mode
	HIGH	FAN

Top view
Horizontal louver: Up
Vertical louver: Center

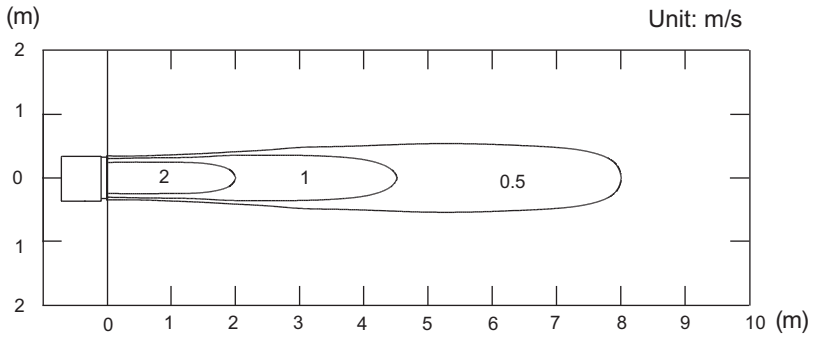

Top view
Horizontal louver: Up
Vertical louver: Left & Right

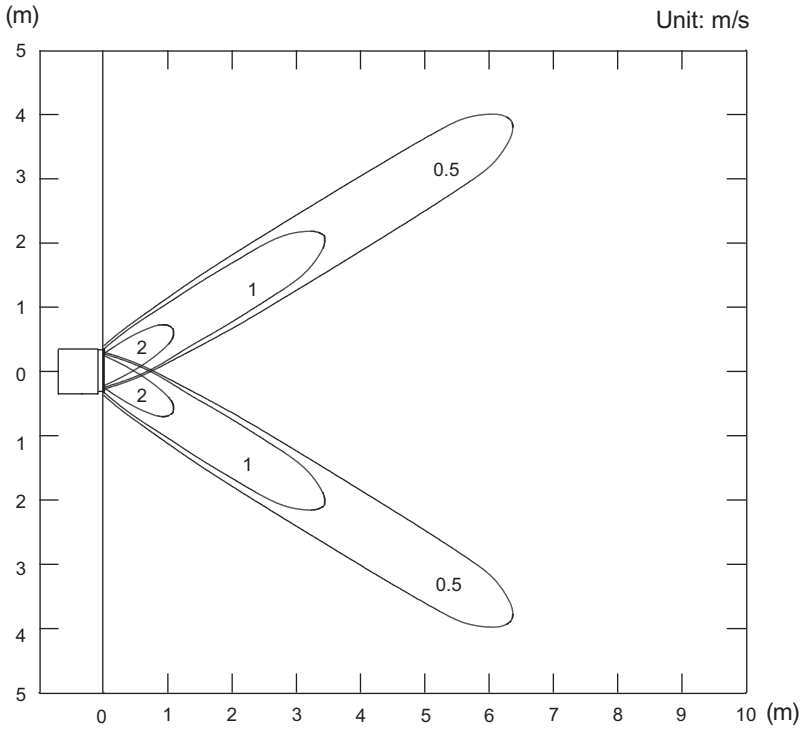

Side view
Horizontal louver: Up
Vertical louver: Center

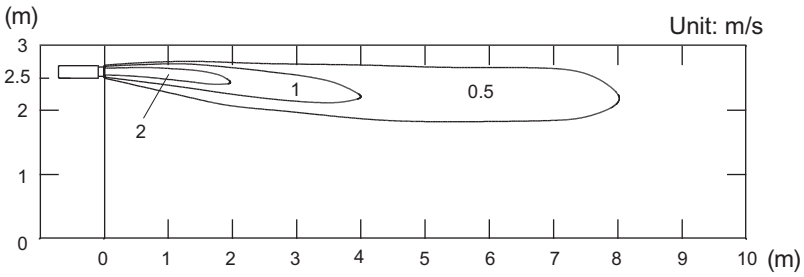

- Air velocity distribution

Measuring conditions	Fan speed	Operation mode
	HIGH	HEAT

Side view
Horizontal louver: Down
Vertical louver: Center

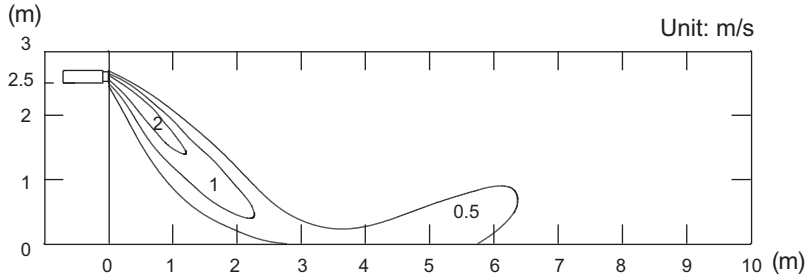

- Air temperature distribution

Measuring conditions	Fan speed	Operation mode
	HIGH	HEAT

Side view
Horizontal louver: Down
Vertical louver: Center

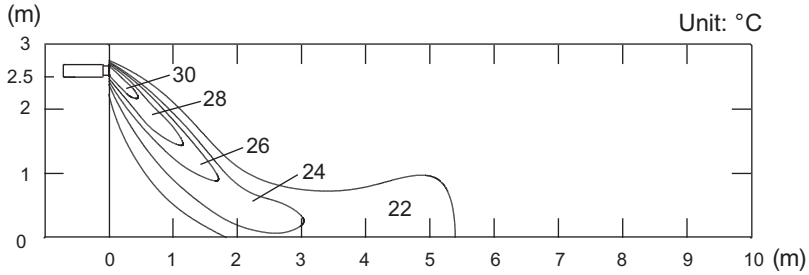

4-5 UNIT
MULTI-SPLIT TYPE

■ Model: ARXG09KLLAP

NOTE: This data is measured after installing optional Auto louver grille kit.

- Air velocity distribution

Measuring conditions	Fan speed	Operation mode
	HIGH	FAN

Top view
Horizontal louver: Up
Vertical louver: Center

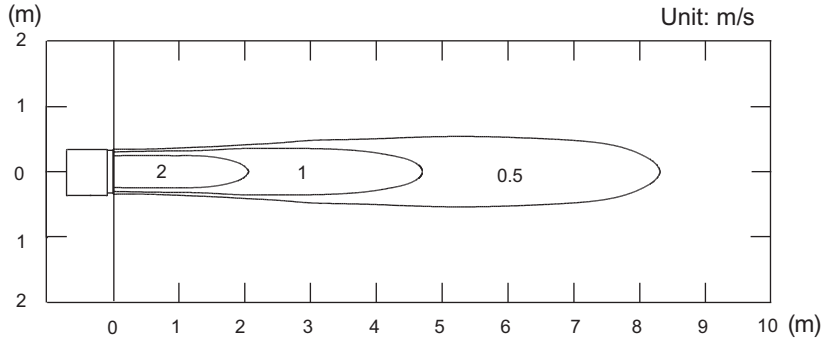

Top view
Horizontal louver: Up
Vertical louver: Left & Right

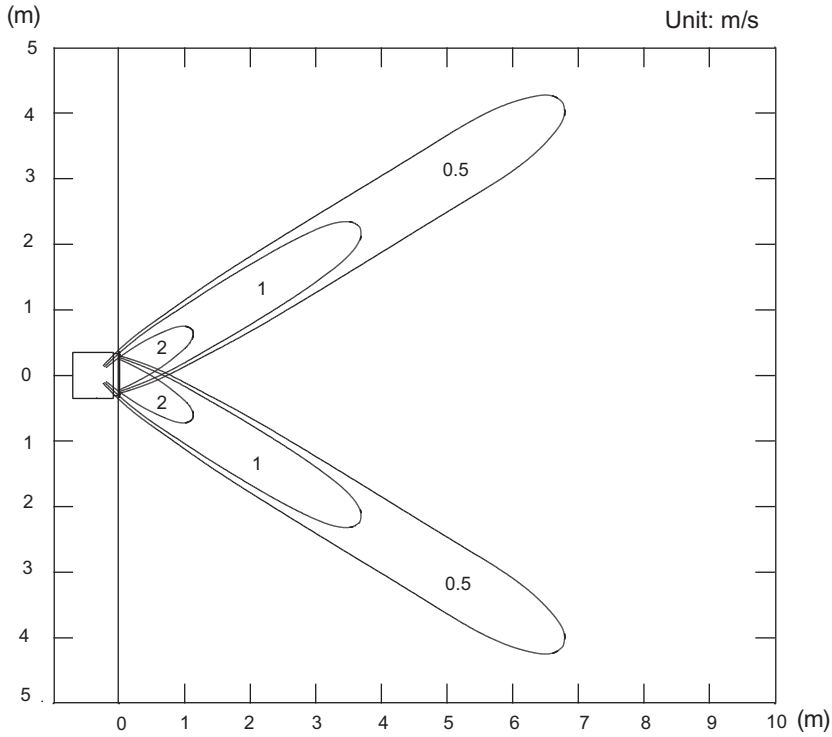

Side view
Horizontal louver: Up
Vertical louver: Center

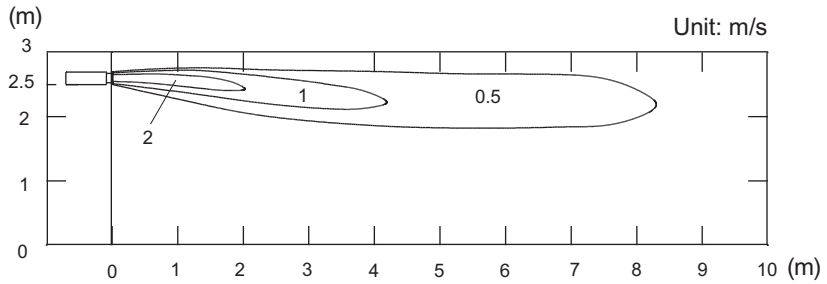

- Air velocity distribution

Measuring conditions	Fan speed	Operation mode
	HIGH	HEAT

Side view
Horizontal louver: Down
Vertical louver: Center

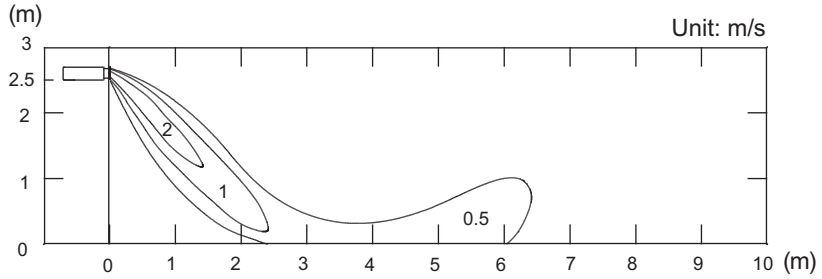

- Air temperature distribution

Measuring conditions	Fan speed	Operation mode
	HIGH	HEAT

Side view
Horizontal louver: Down
Vertical louver: Center

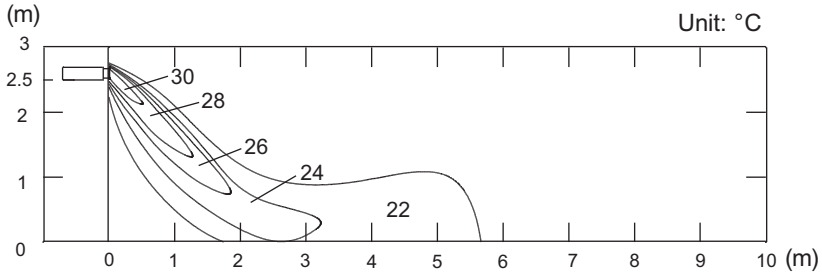

■ Model: ARXG12KLLAP

NOTE: This data is measured after installing optional Auto louver grille kit.

- Air velocity distribution

Measuring conditions	Fan speed	Operation mode
	HIGH	FAN

Top view
Horizontal louver: Up
Vertical louver: Center

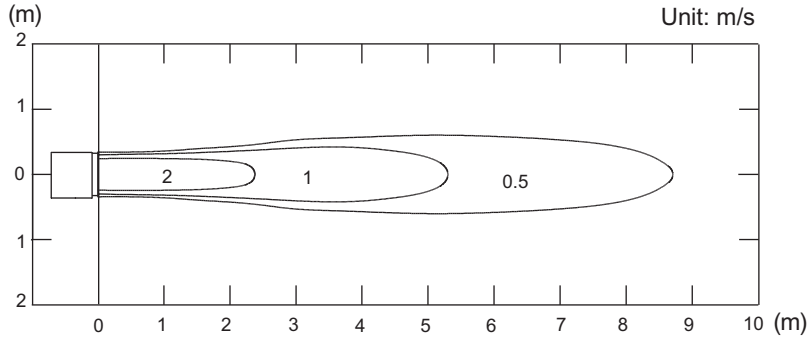

Top view
Horizontal louver: Up
Vertical louver: Left & Right

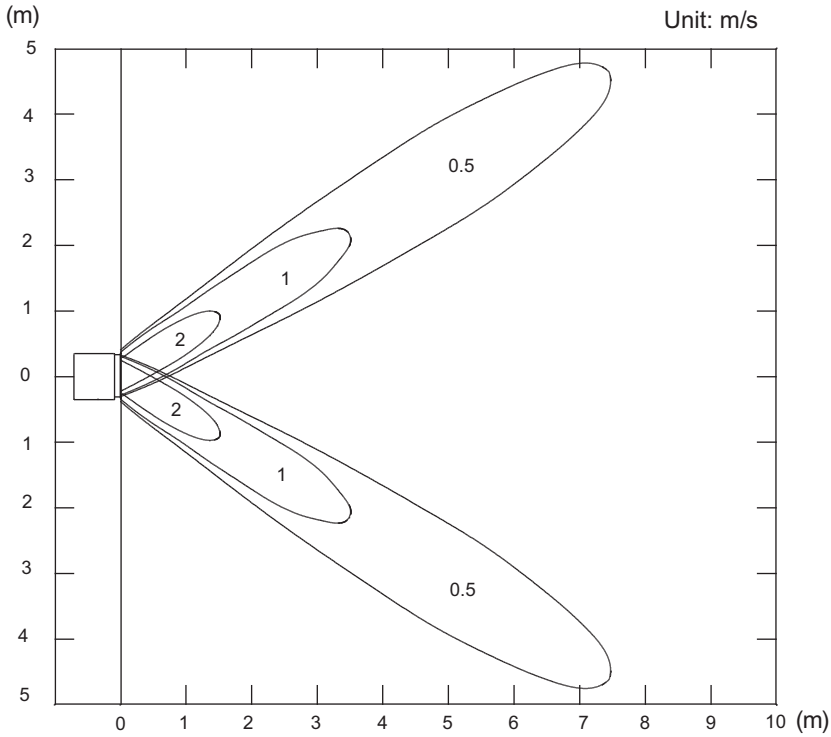

Side view
Horizontal louver: Up
Vertical louver: Center

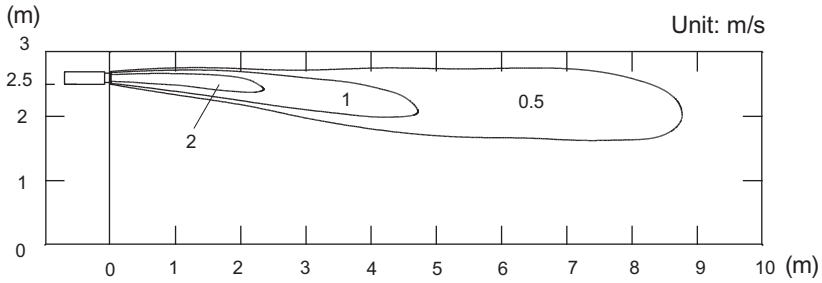

- Air velocity distribution

Measuring conditions	Fan speed	Operation mode
	HIGH	HEAT

Side view
Horizontal louver: Down
Vertical louver: Center

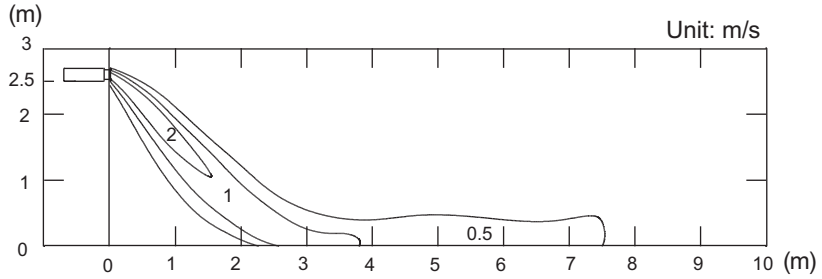

- Air temperature distribution

Measuring conditions	Fan speed	Operation mode
	HIGH	HEAT

Side view
Horizontal louver: Down
Vertical louver: Center

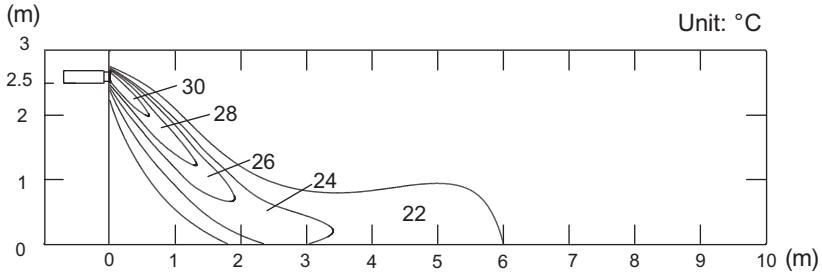

4-5 UNIT
MULTI-SPLIT TYPE

■ Model: ARXG14KLLAP

NOTE: This data is measured after installing optional Auto louver grille kit.

- Air velocity distribution

Measuring conditions	Fan speed	Operation mode
	HIGH	FAN

Top view
Horizontal louver: Up
Vertical louver: Center

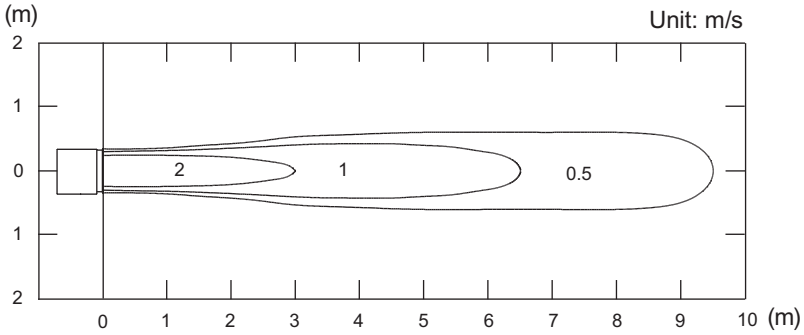

Top view
Horizontal louver: Up
Vertical louver: Left & Right

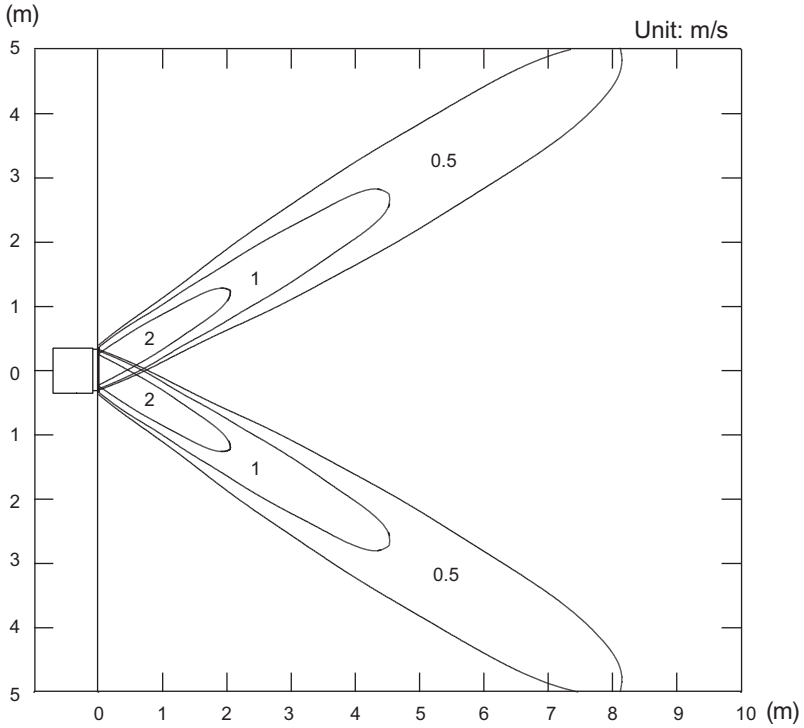

Side view
Horizontal louver: Up
Vertical louver: Center

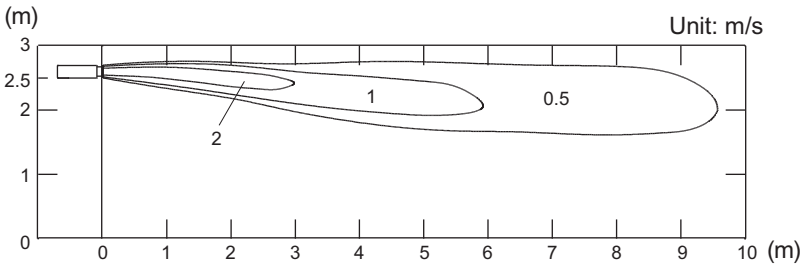

- Air velocity distribution

Measuring conditions	Fan speed	Operation mode
	HIGH	HEAT

Side view
Horizontal louver: Down
Vertical louver: Center

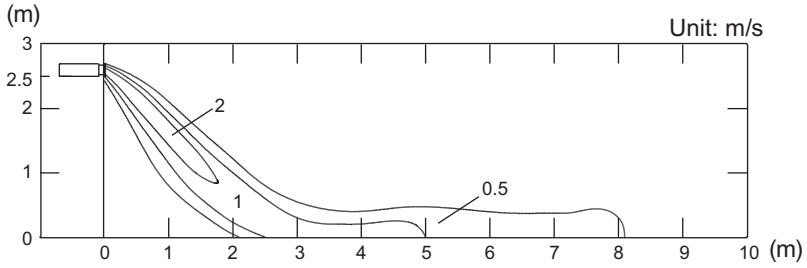

- Air temperature distribution

Measuring conditions	Fan speed	Operation mode
	HIGH	HEAT

Side view
Horizontal louver: Down
Vertical louver: Center

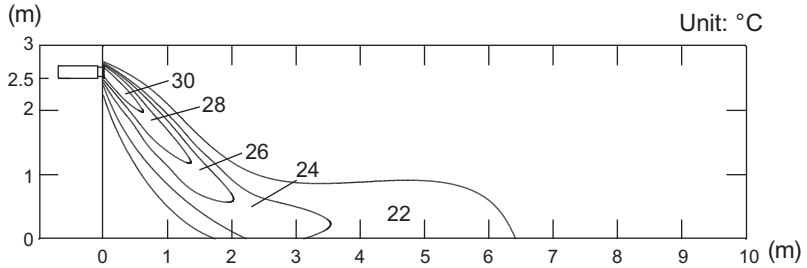

4-5 UNIT
MULTI-SPLIT TYPE

■ Model: ARXG18KLLAP

NOTE: This data is measured after installing optional Auto Louver Grille Kit.

Measuring conditions	Fan speed	Operation mode
	HIGH	FAN

- Air velocity distribution

Top view
Horizontal louver: Up
Vertical louver: Center

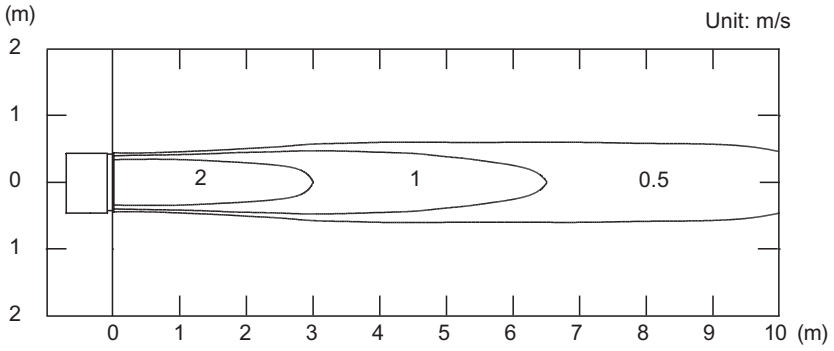

Top view
Horizontal louver: Up
Vertical louver: Left & Right

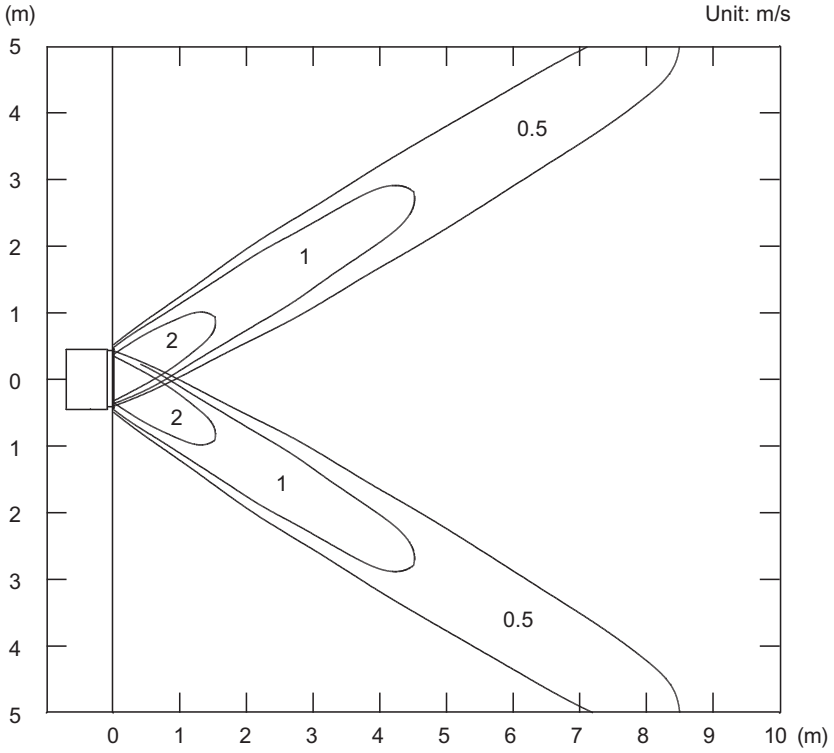

Side view
Horizontal louver: Up
Vertical louver: Center

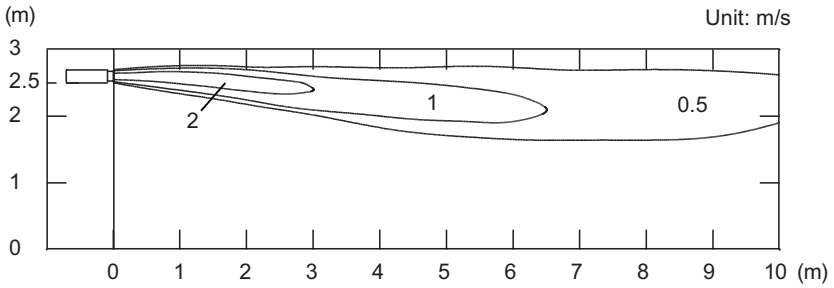

Measuring conditions	Fan speed	Operation mode
	HIGH	HEAT

- Air velocity distribution

Side view
Horizontal louver: Down
Vertical louver: Center

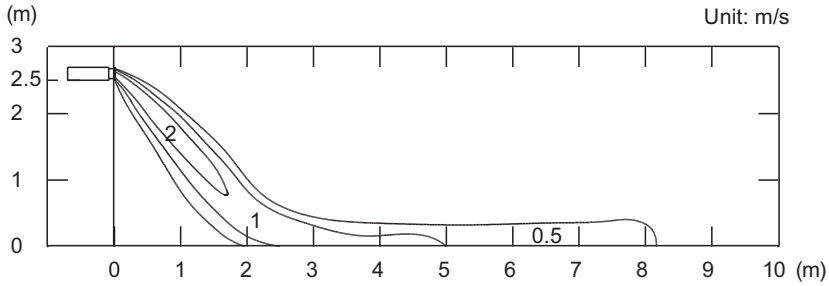

- Air temperature distribution

Side view
Horizontal louver: Down
Vertical louver: Center

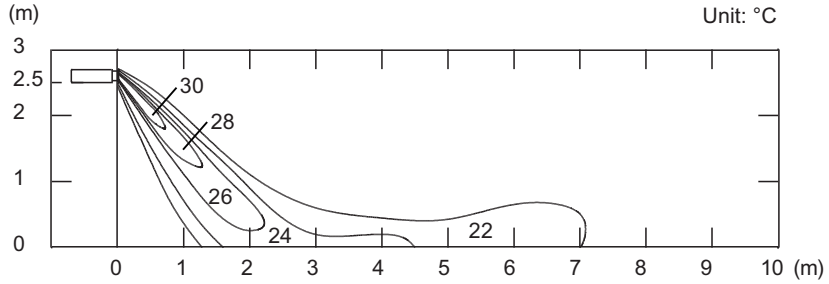

6-4. Wall mounted type

■ Models: ASEH07–12KMCG, ASEH07–12KMCG-B, ASEG07–12KETF, ASEG07–12KETF-B, and ASEH07–09KGTG

Measuring conditions	Fan speed	Operation mode
	HIGH	FAN

Top view
Horizontal louver: Up
Vertical louver: Center

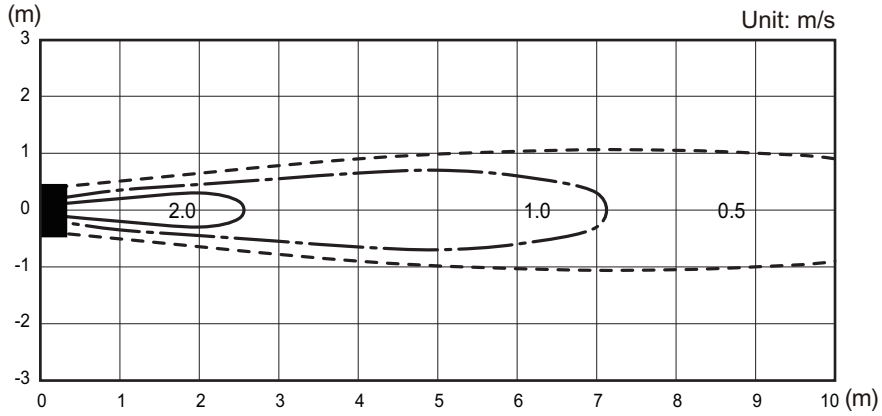

Top view
Horizontal louver: Up
Vertical louver: Left & Right

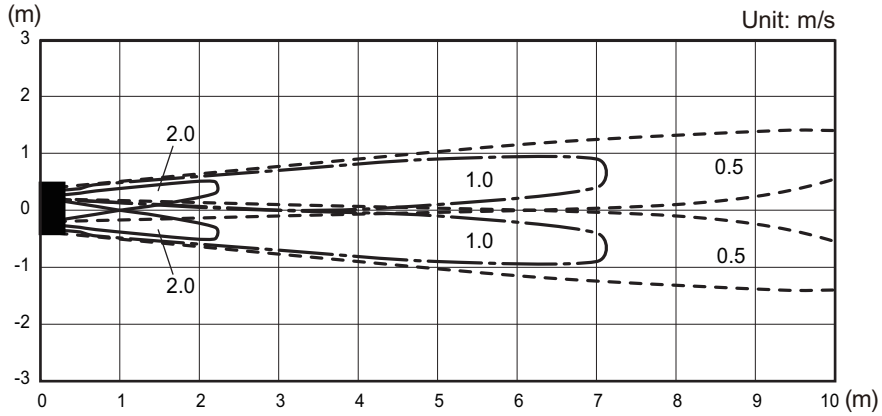

Side view
Horizontal louver: Up
Vertical louver: Center

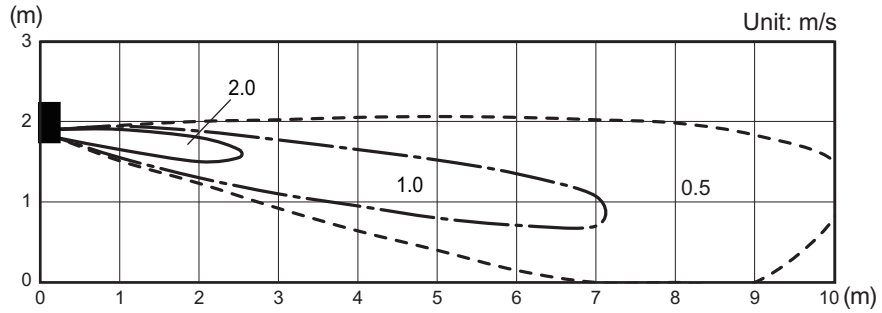

Side view
Horizontal louver: Down
Vertical louver: Center

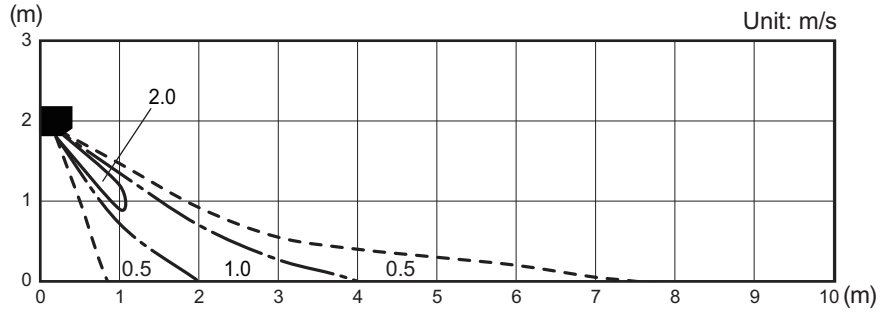

■ Models: ASEH14KMCG, ASEH14KMCG-B, ASEG14KETF, ASEG14KETF-B, and ASEH12–14KGTG

Measuring conditions	Fan speed	Operation mode
	HIGH	FAN

Top view
Horizontal louver: Up
Vertical louver: Center

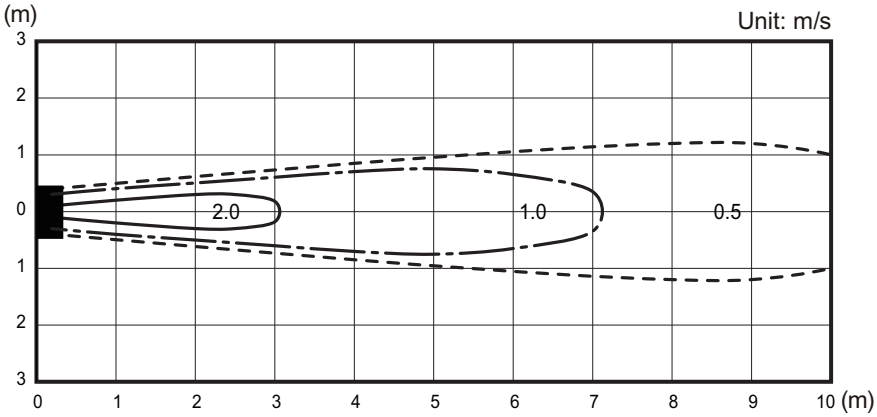

Top view
Horizontal louver: Up
Vertical louver: Left & Right

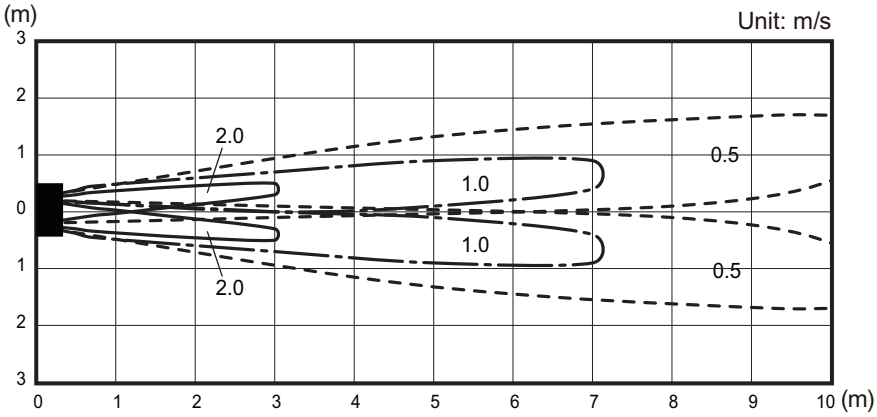

Side view
Horizontal louver: Up
Vertical louver: Center

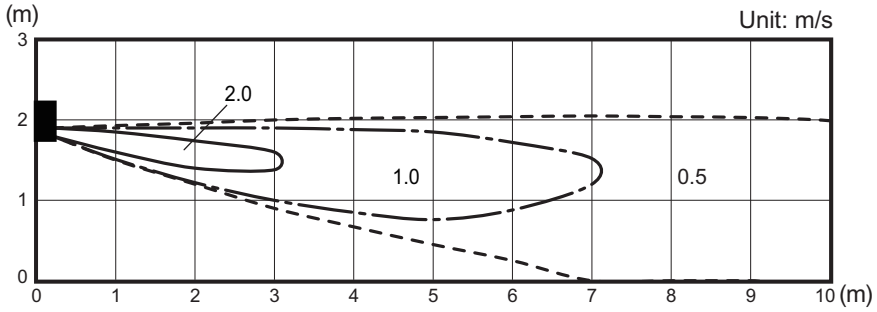

Side view
Horizontal louver: Down
Vertical louver: Center

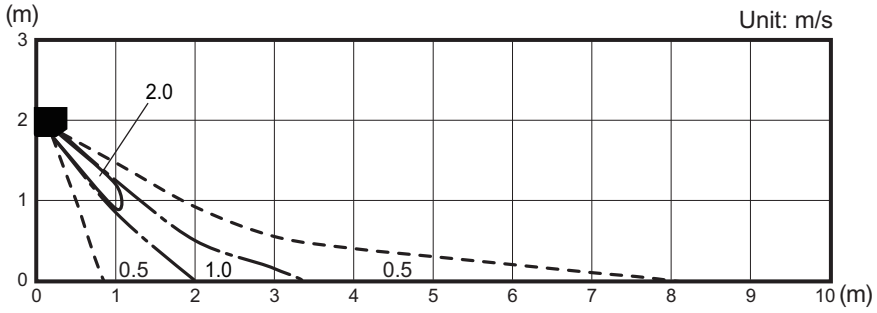

■ Model: ASEH05KNCA

Measuring conditions	Fan speed	Operation mode
	HIGH	FAN

Top view
Horizontal louver: Up
Vertical louver: Center

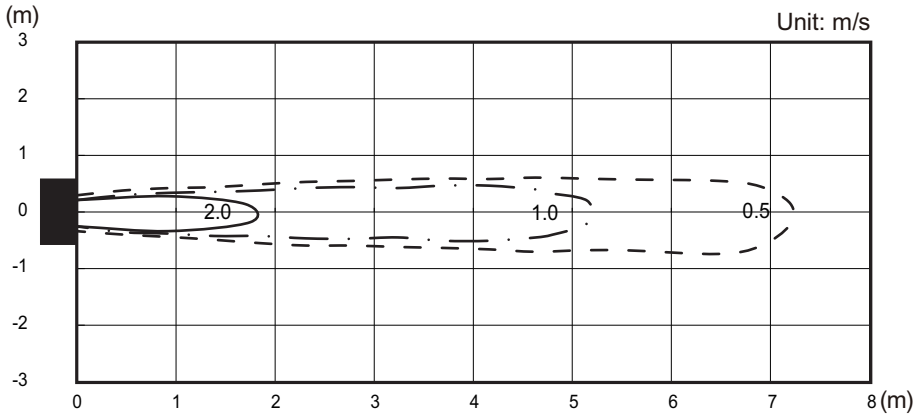

Top view
Horizontal louver: Up
Vertical louver: Left & Right

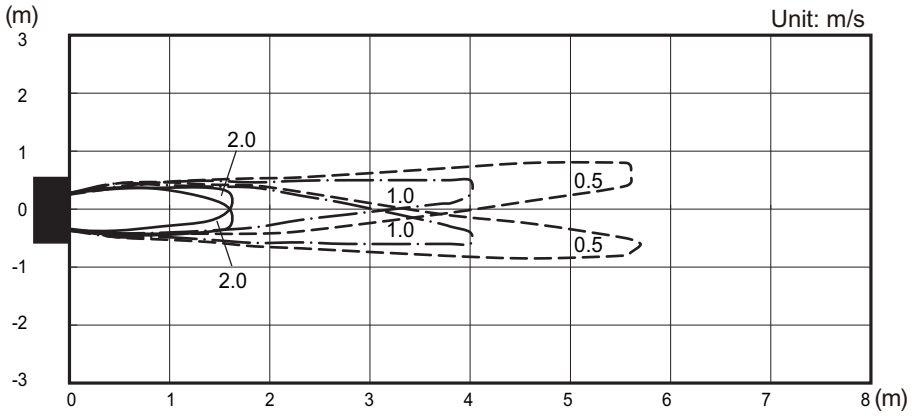

Side view
Horizontal louver: Up
Vertical louver: Center

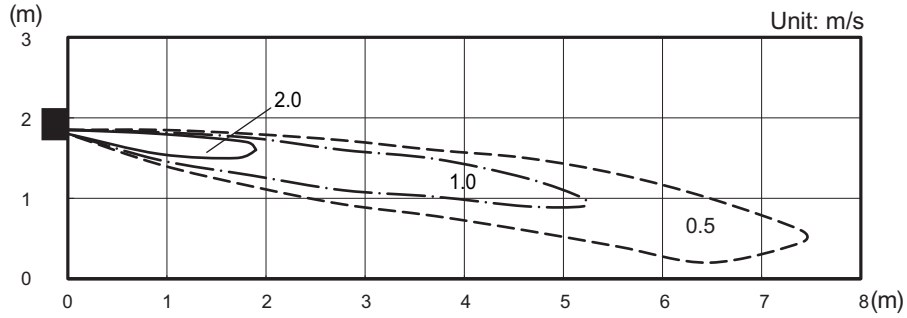

Side view
Horizontal louver: Down
Vertical louver: Center

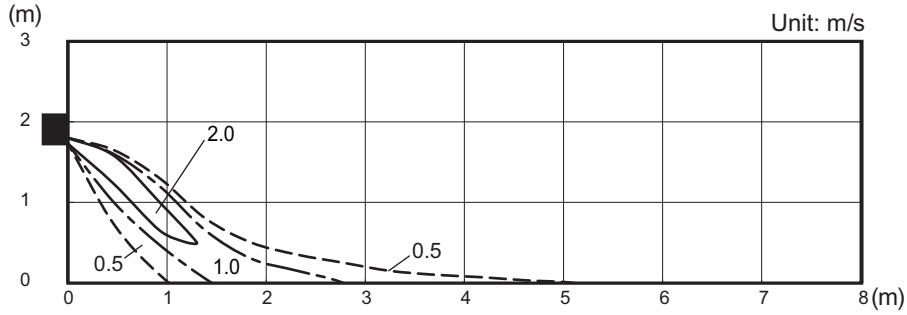

■ Model: ASEH07KNCA

Measuring conditions	Fan speed	Operation mode
	HIGH	FAN

Top view
Horizontal louver: Up
Vertical louver: Center

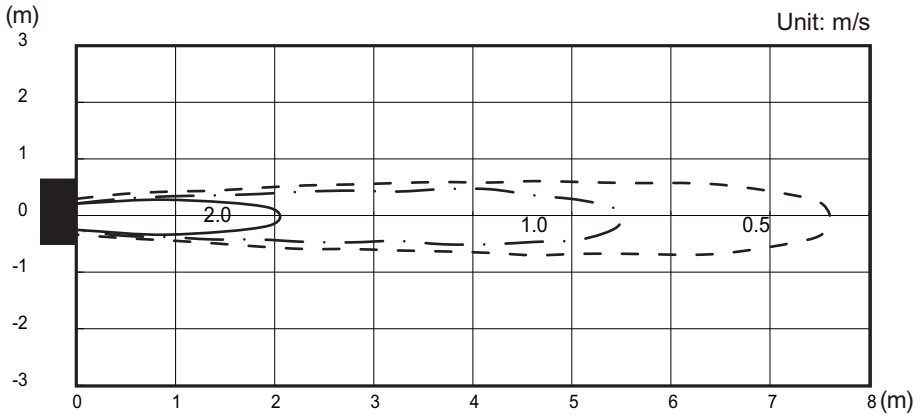

Top view
Horizontal louver: Up
Vertical louver: Left & Right

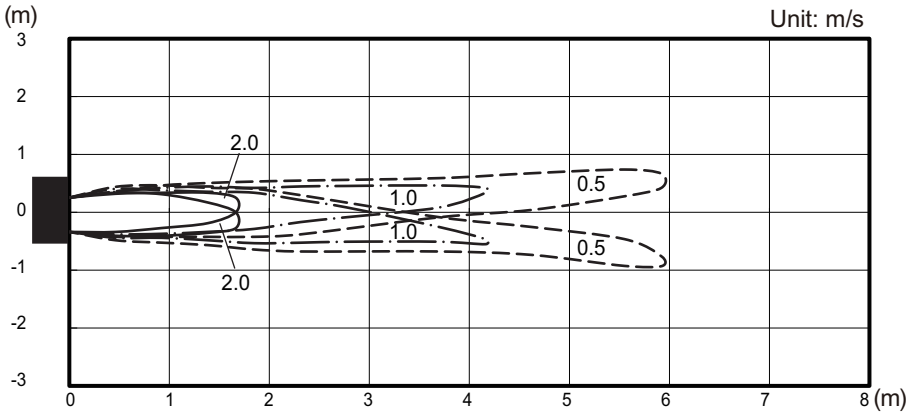

Side view
Horizontal louver: Up
Vertical louver: Center

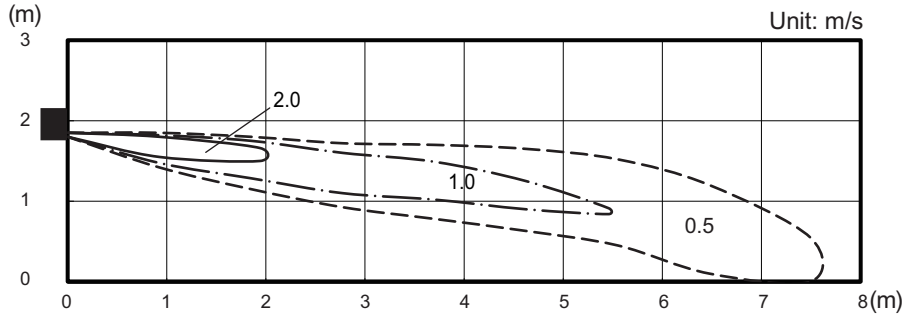

Side view
Horizontal louver: Down
Vertical louver: Center

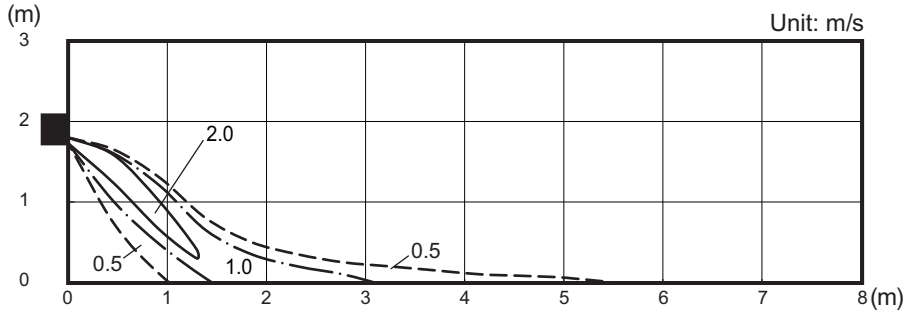

■ Model: ASEH09KNCA

Measuring conditions	Fan speed	Operation mode
	HIGH	FAN

Top view
Horizontal louver: Up
Vertical louver: Center

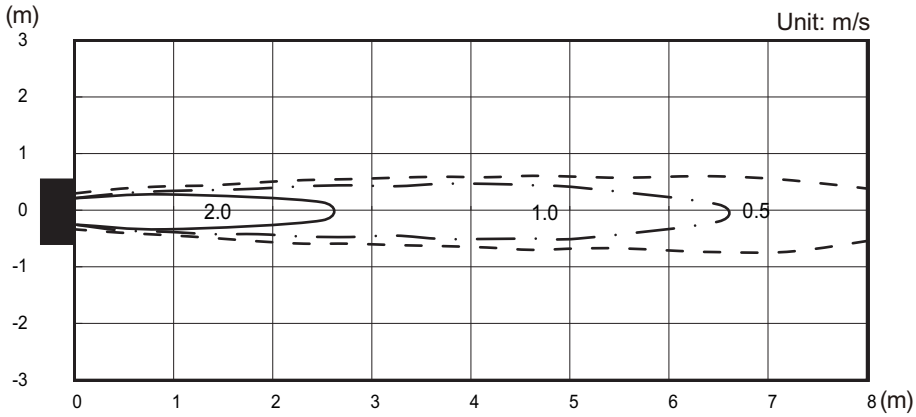

Top view
Horizontal louver: Up
Vertical louver: Left & Right

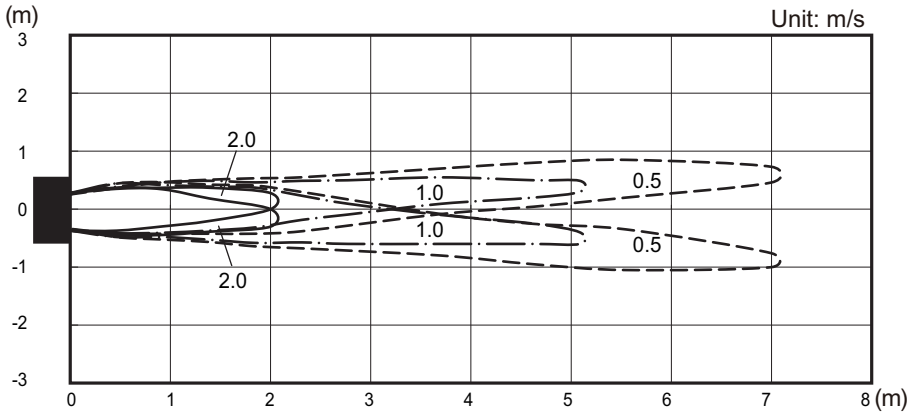

Side view
Horizontal louver: Up
Vertical louver: Center

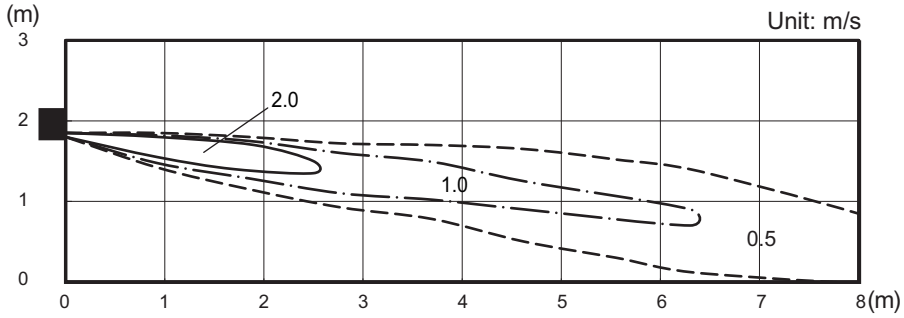

Side view
Horizontal louver: Down
Vertical louver: Center

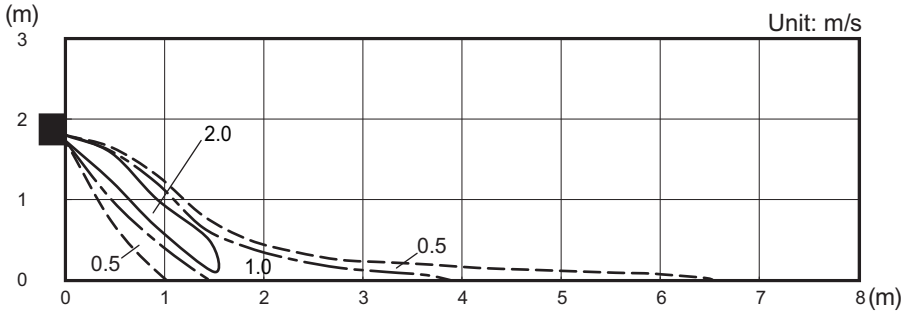

■ Model: ASEH12KNCA

Measuring conditions	Fan speed	Operation mode
	HIGH	FAN

Top view
Horizontal louver: Up
Vertical louver: Center

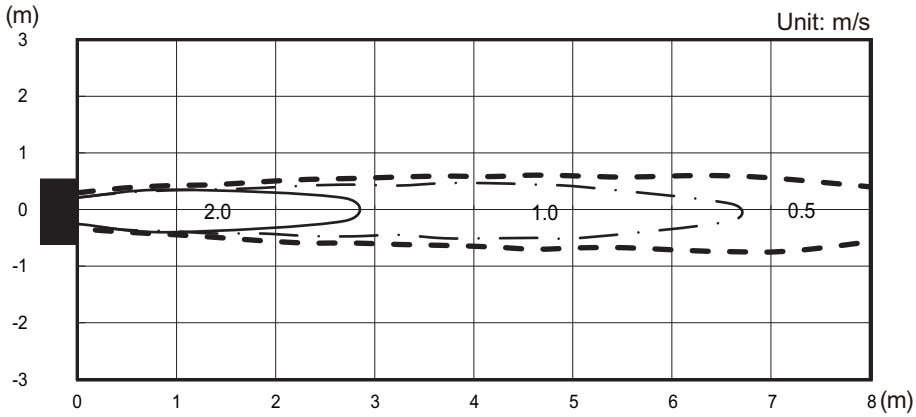

Top view
Horizontal louver: Up
Vertical louver: Left & Right

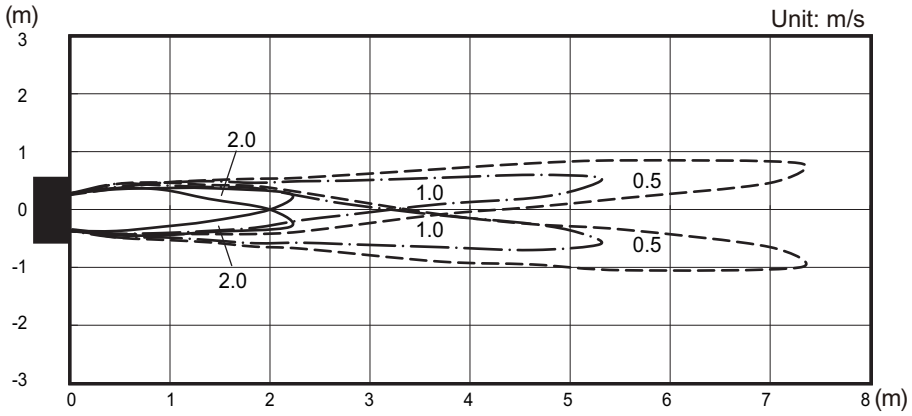

Side view
Horizontal louver: Up
Vertical louver: Center

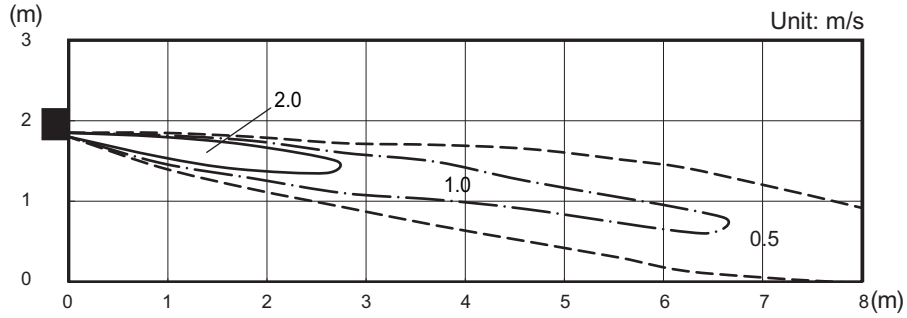

Side view
Horizontal louver: Down
Vertical louver: Center

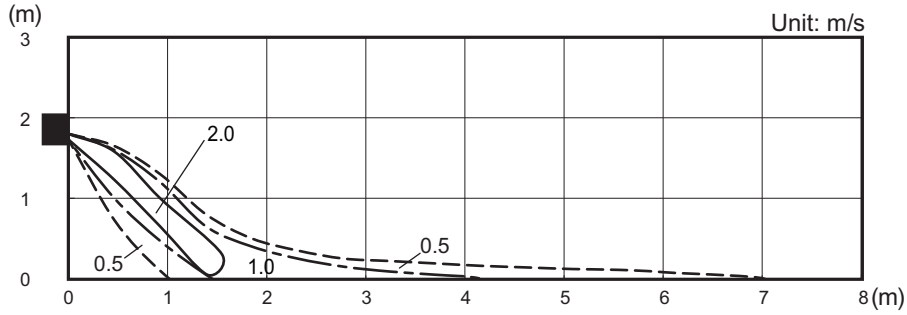

■ Models: ASEG18–24KMTE

Measuring conditions	Fan speed	Operation mode
	HIGH	FAN

Top view
Horizontal louver: Up
Vertical louver: Center

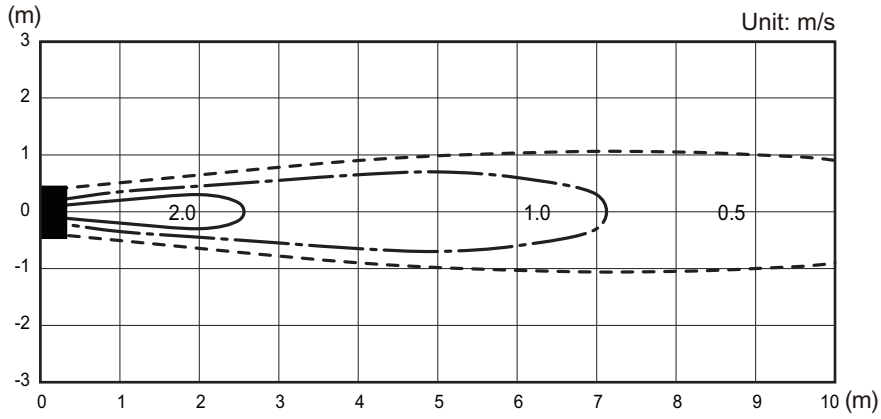

Top view
Horizontal louver: Up
Vertical louver: Left & Right

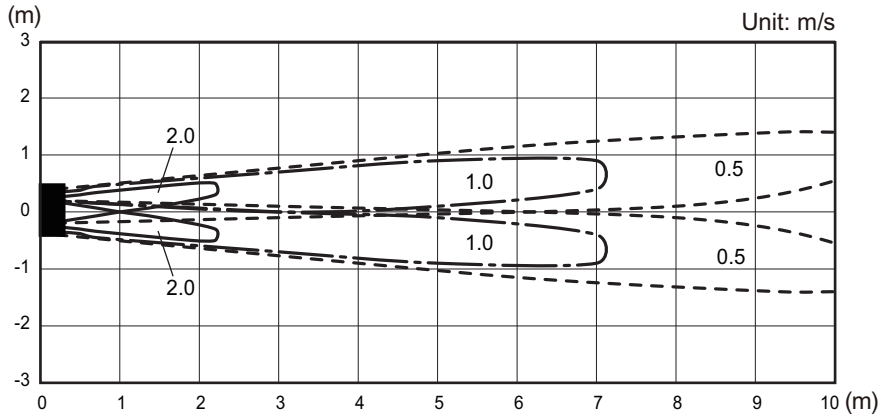

Side view
Horizontal louver: Up
Vertical louver: Center

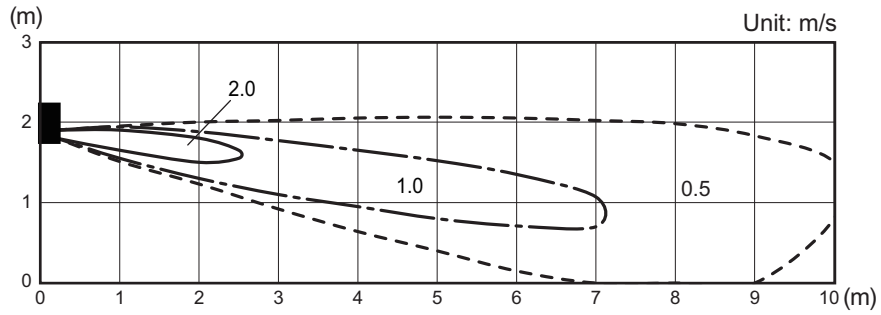

Side view
Horizontal louver: Down
Vertical louver: Center

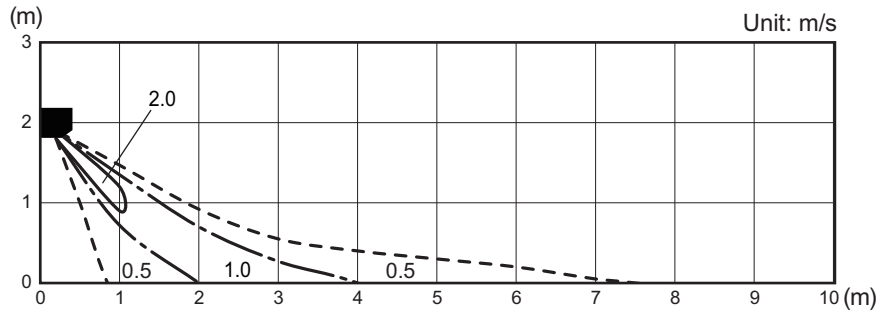

6-5. Ceiling type

■ Model: ABEG18KRTA

Measuring conditions	Fan speed	Operation mode
	HIGH	FAN

Top view
Horizontal louver: Up
Vertical louver: Center

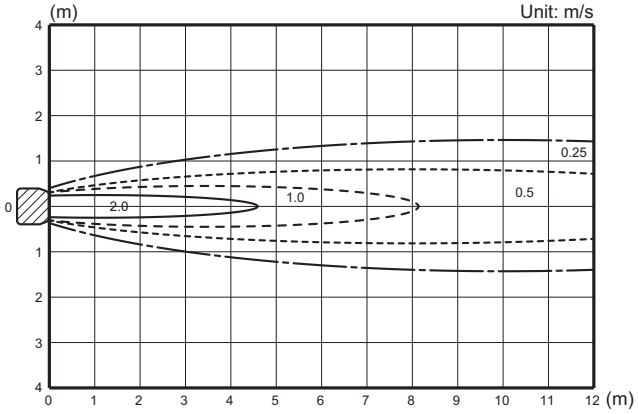

Top view
Horizontal louver: Up
Vertical louver: Left & Right

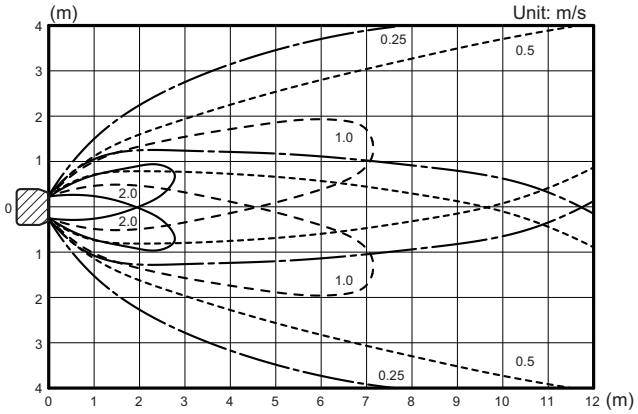

Side view
Horizontal louver: Up
Vertical louver: Center

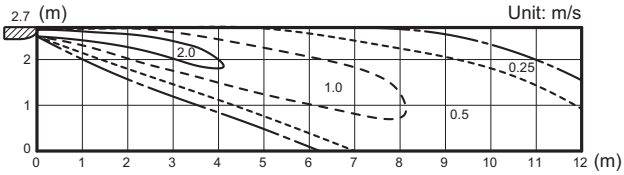

Side view
Horizontal louver: Down
Vertical louver: Center

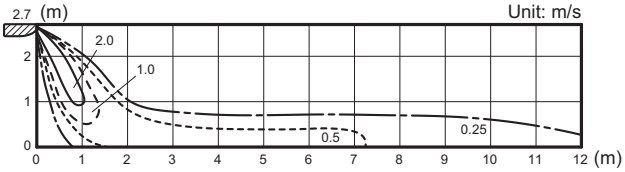

■ Model: ABEG22KRTA

Measuring conditions	Fan speed	Operation mode
	HIGH	FAN

Top view
Horizontal louver: Up
Vertical louver: Center

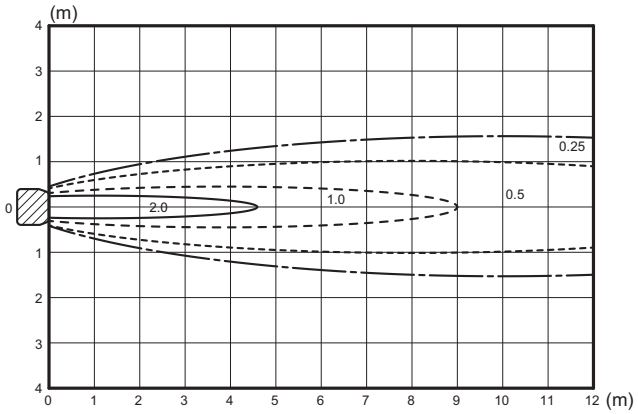

Top view
Horizontal louver: Up
Vertical louver: Left & Right

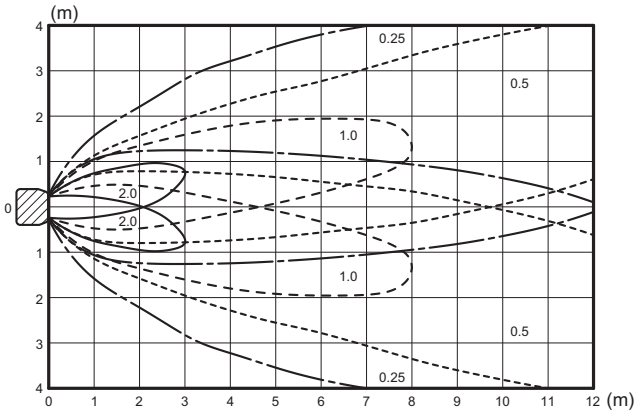

Side view
Horizontal louver: Up
Vertical louver: Center

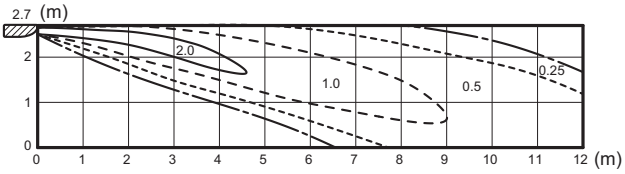

Side view
Horizontal louver: Down
Vertical louver: Center

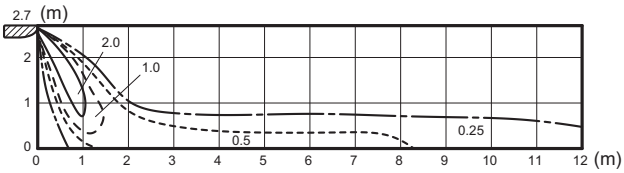

6-6. Floor type

■ Models: AGEG09–14KVCA

Measuring conditions	Fan speed	Operation mode	Fan select
	HIGH	FAN	Upper and lower

Top view
Horizontal louver: Up
Vertical louver: Center

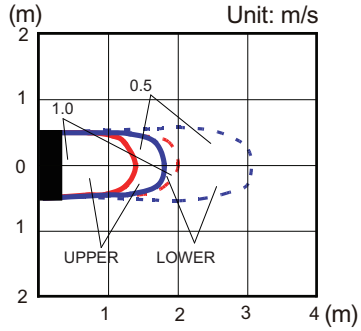

Top view
Horizontal louver: Up
Vertical louver: Left & Right

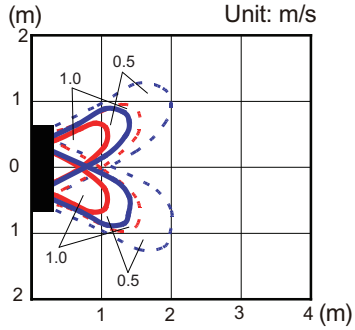

Side view
Horizontal louver: Up
Vertical louver: Center

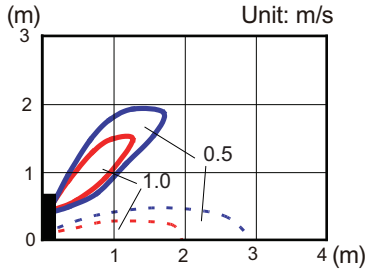

Side view
Horizontal louver: Down
Vertical louver: Center

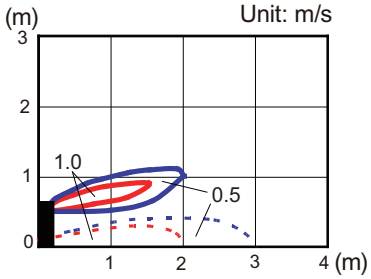

7. Fan performance

NOTE: Airflow and capacity/outlet temperature curve data are measured based on the same conditions mentioned in "Specifications".

7-1. Mini duct type

■ Model: ARXG07KSLAP

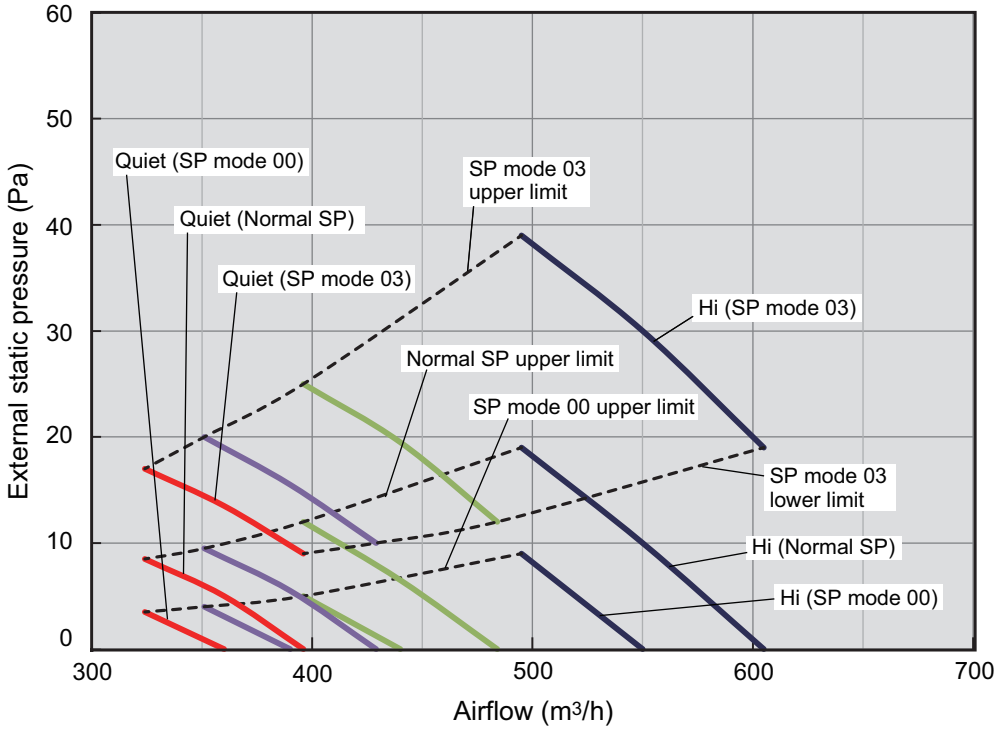

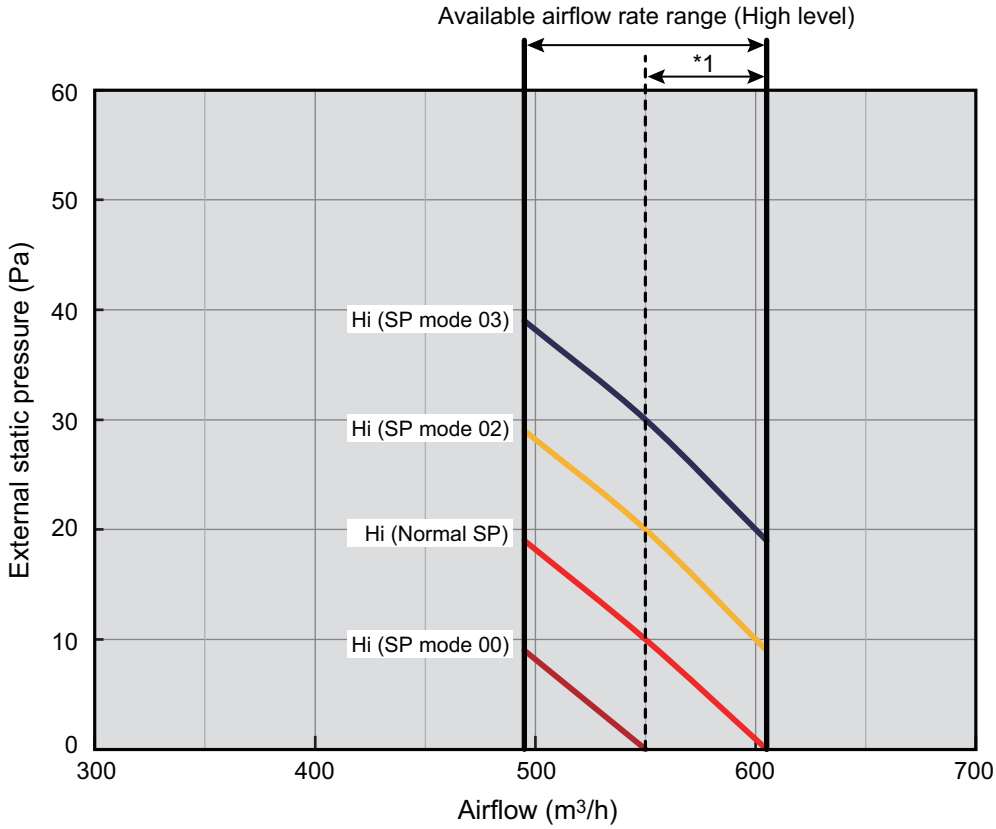

*1: Available airflow rate range when Auto louver grille (option) is installed.
Fan speed: HIGH
Vertical airflow direction louver: Up

● Characteristics of air volume and capacity

- **Cooling**

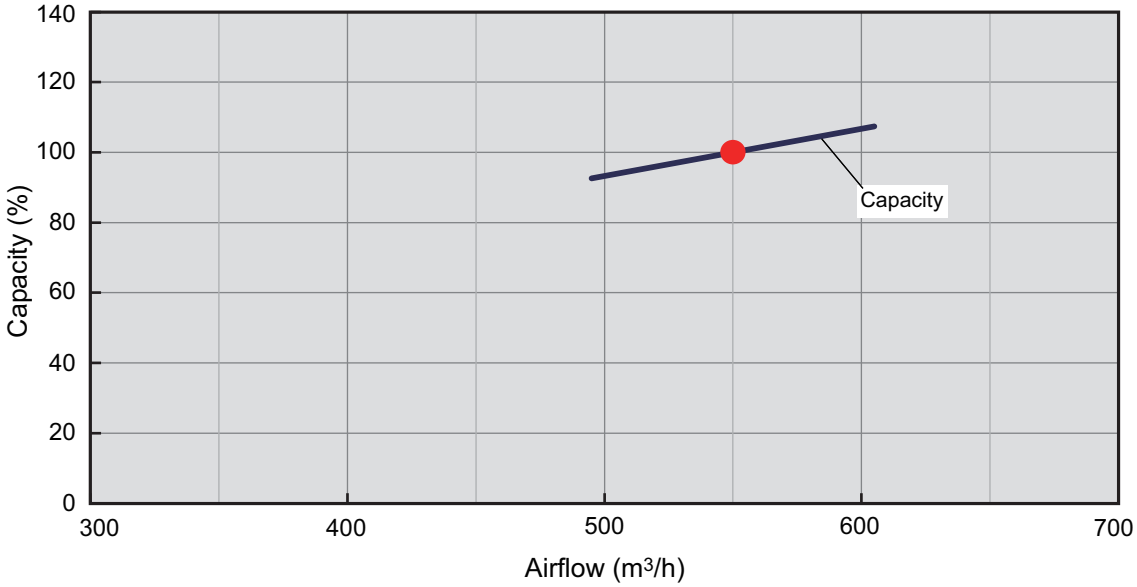

- **Heating**

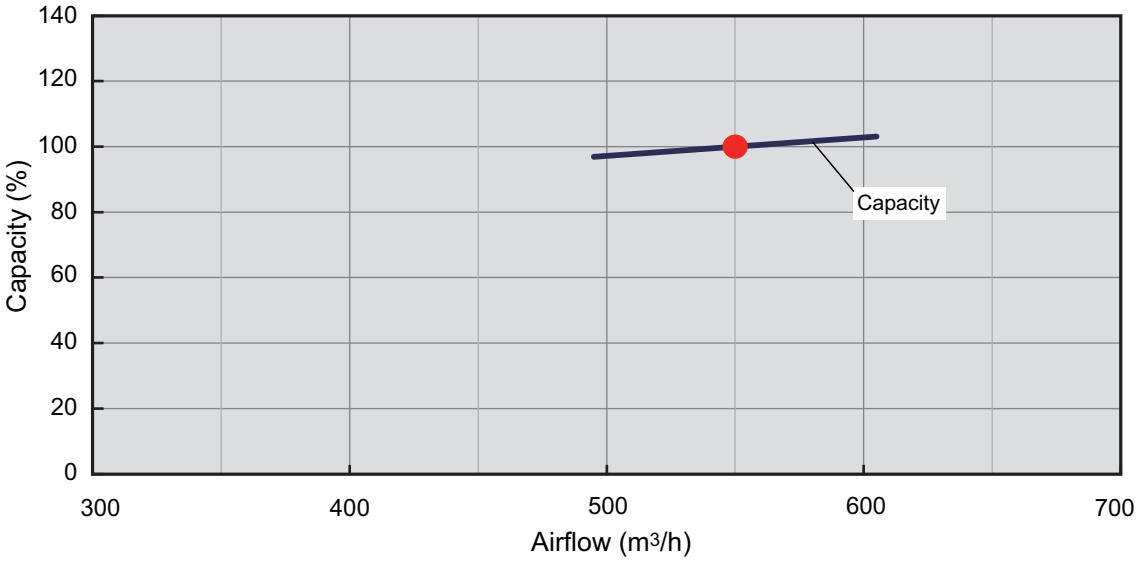

4-5 UNIT MULTI-SPLIT TYPE

■ Model: ARXG09KSLAP

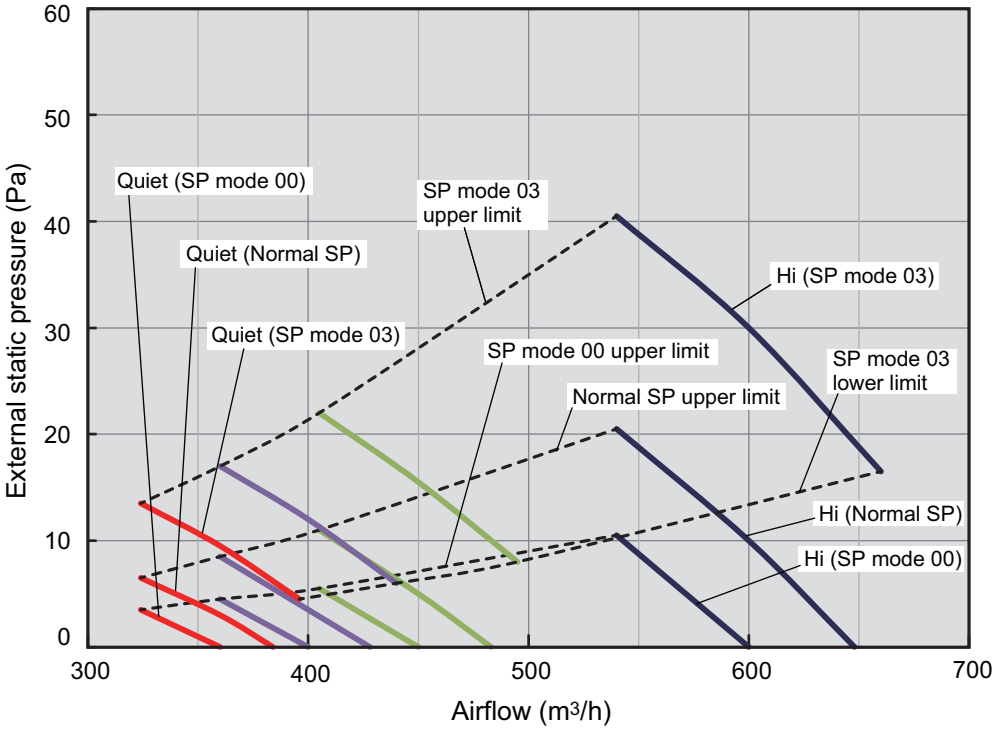

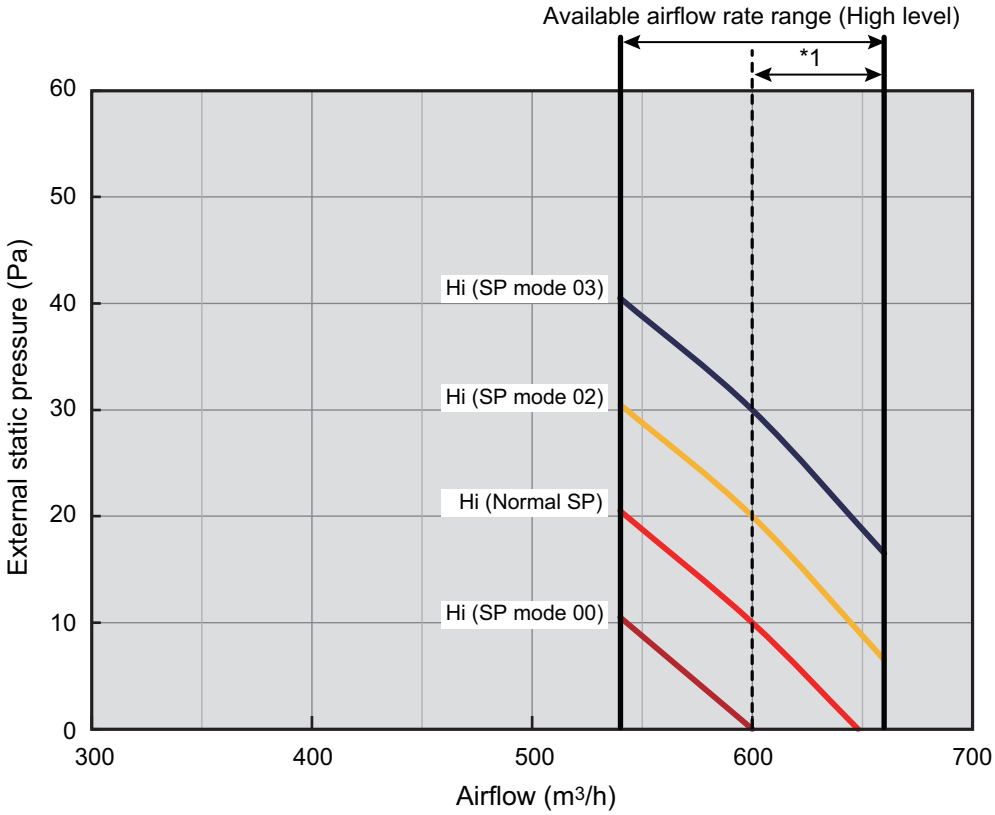

*1: Available airflow rate range when Auto louver grille (option) is installed.
Fan speed: HIGH
Vertical airflow direction louver: Up

● Characteristics of air volume and capacity

- **Cooling**

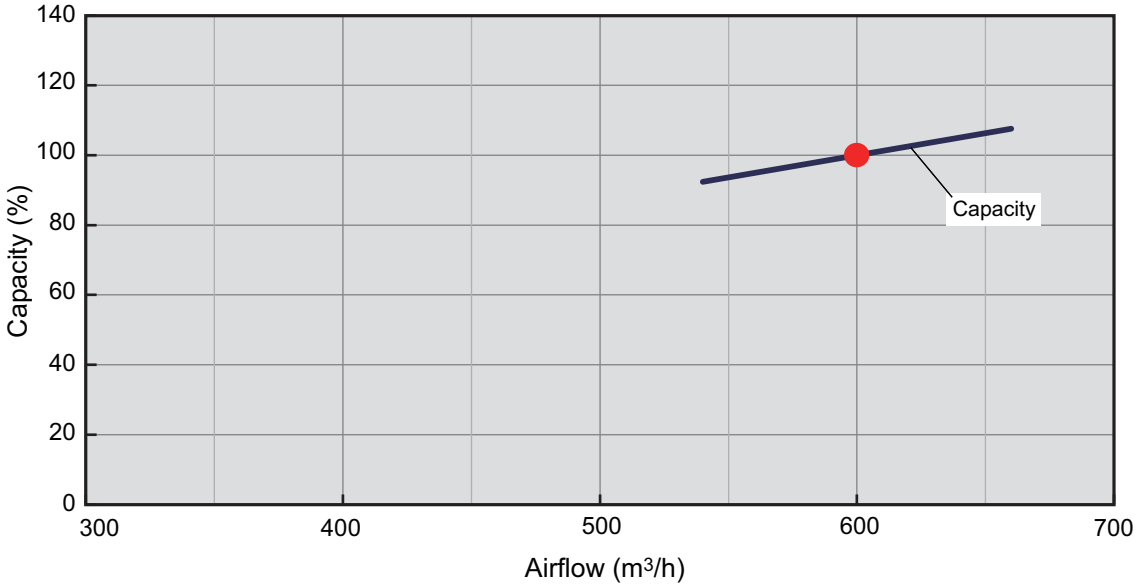

- **Heating**

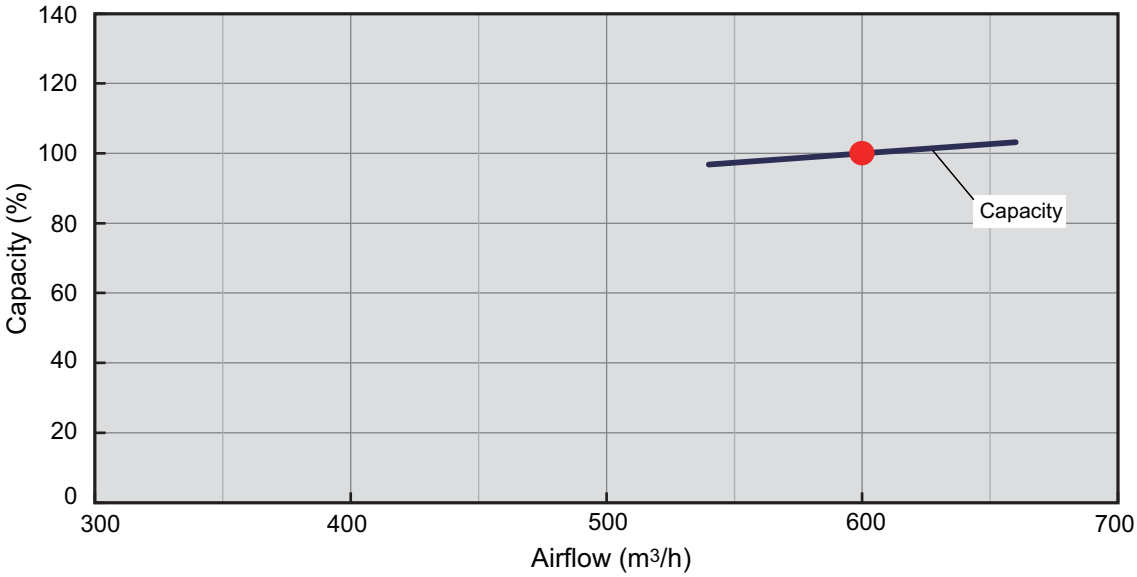

■ Model: ARXG12KSLAP

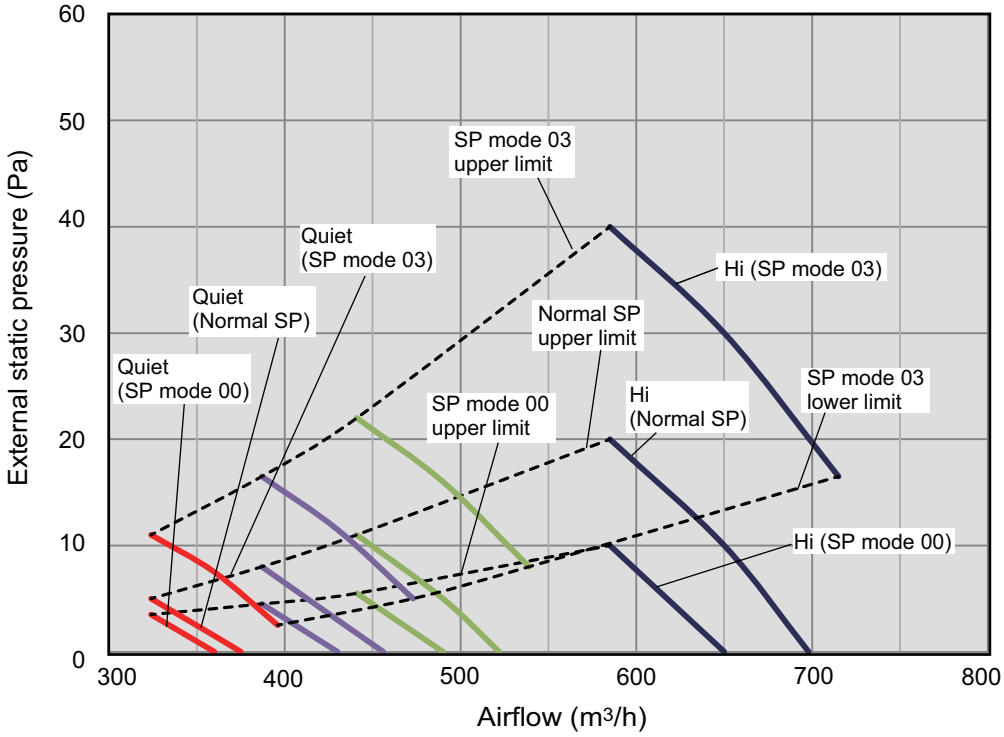

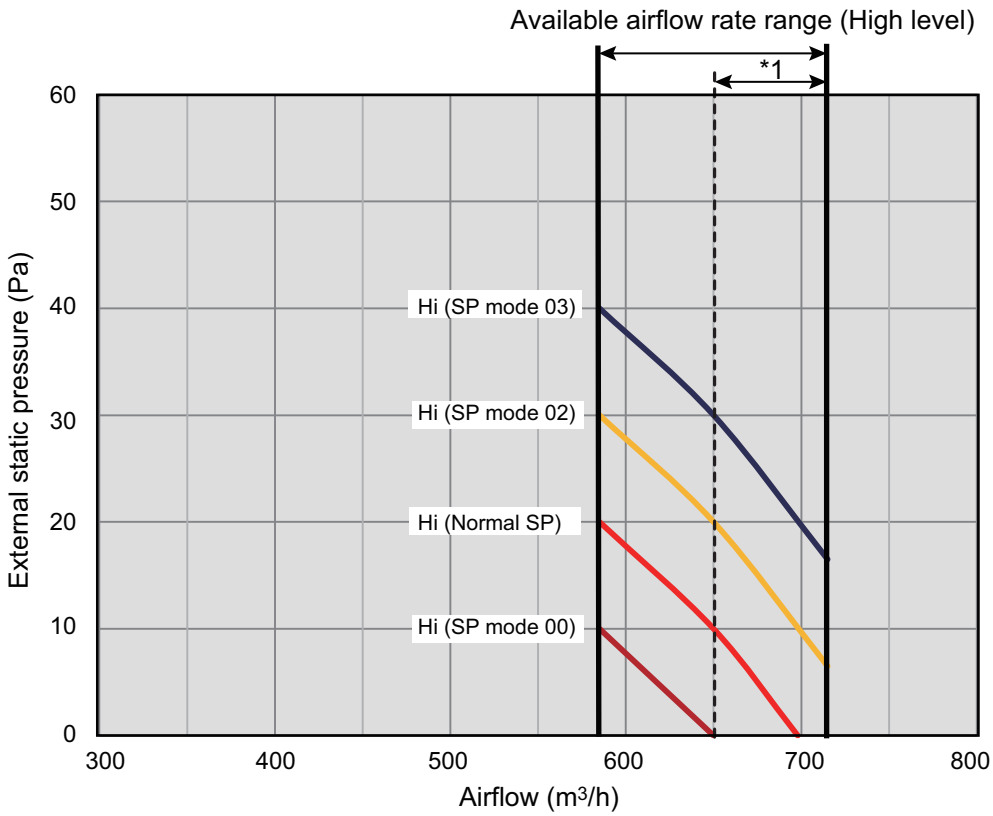

*1: Available airflow rate range when Auto louver grille (option) is installed.
Fan speed: HIGH
Vertical airflow direction louver: Up

● Characteristics of air volume and capacity

- **Cooling**

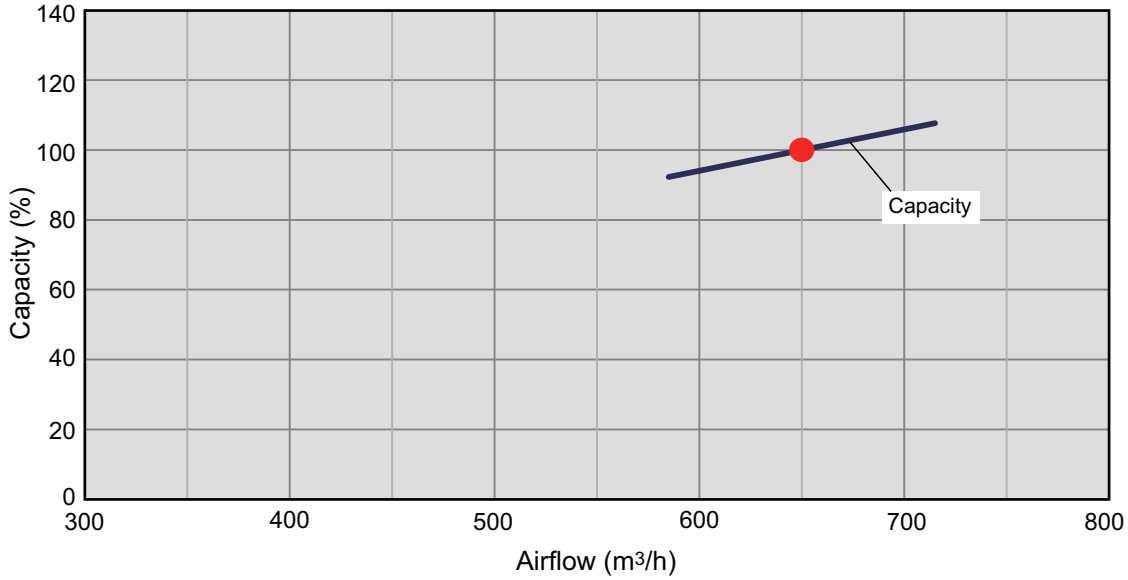

- **Heating**

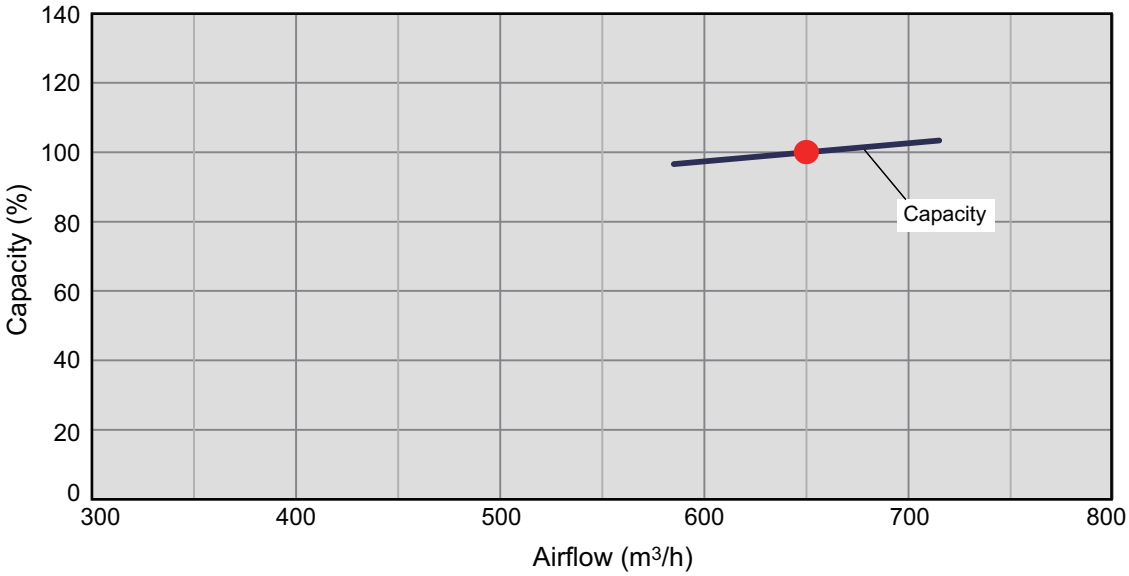

■ Model: ARXG14KSLAP

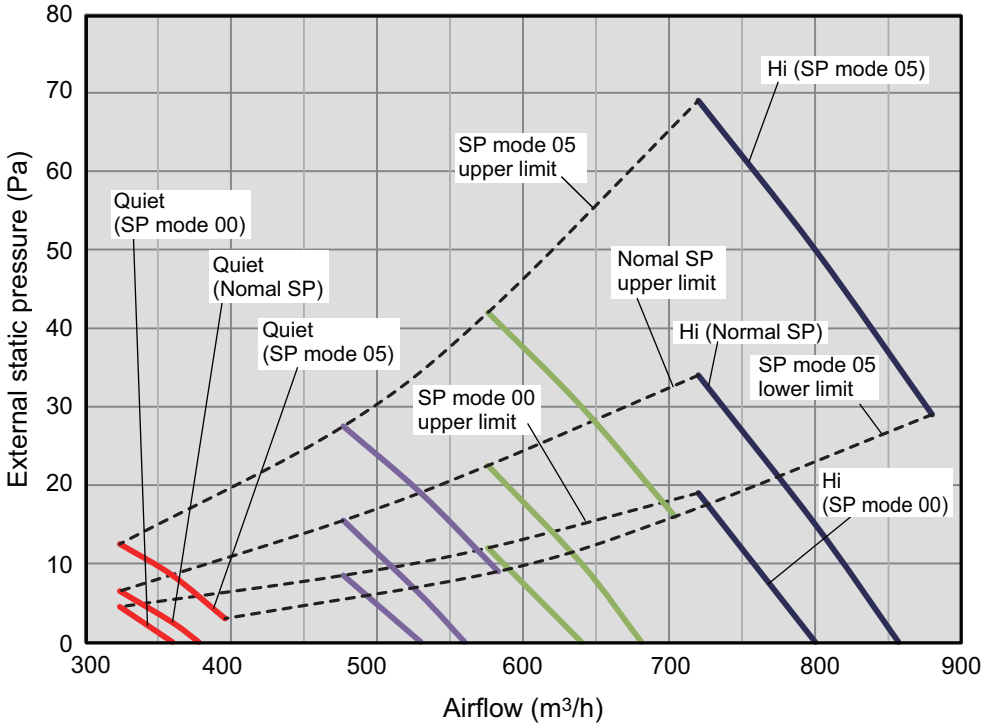

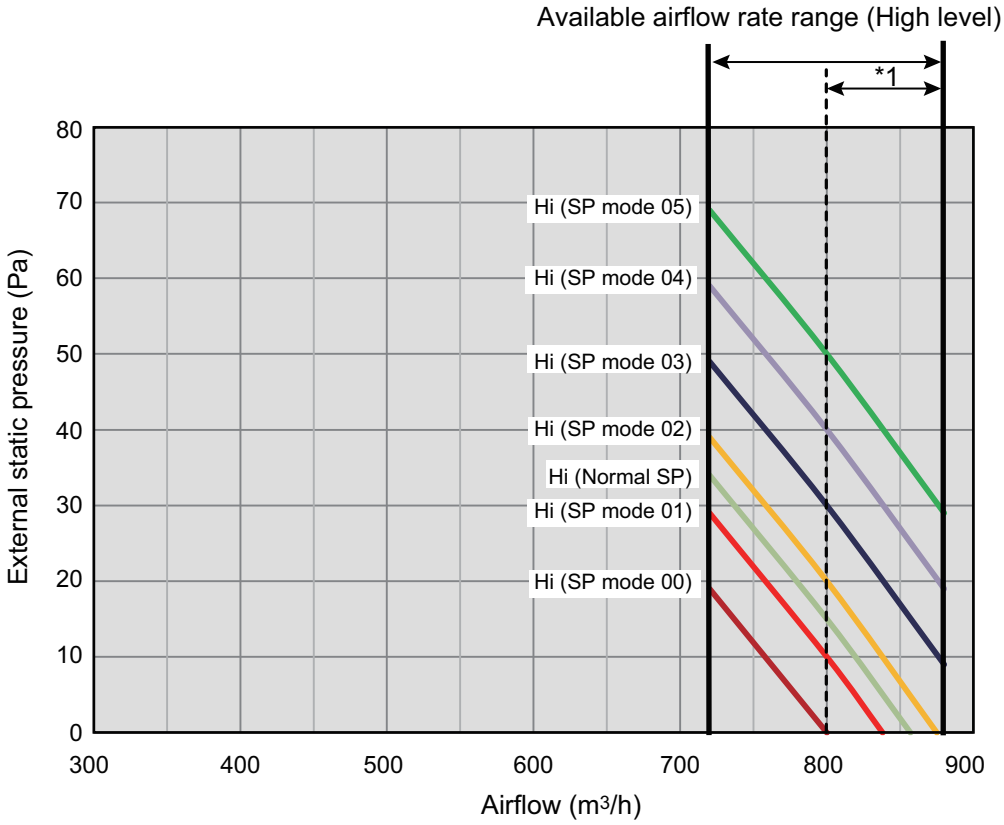

*1: Available airflow rate range when Auto louver grille (option) is installed.
Fan speed: HIGH
Vertical airflow direction louver: Up

● Characteristics of air volume and capacity

- **Cooling**

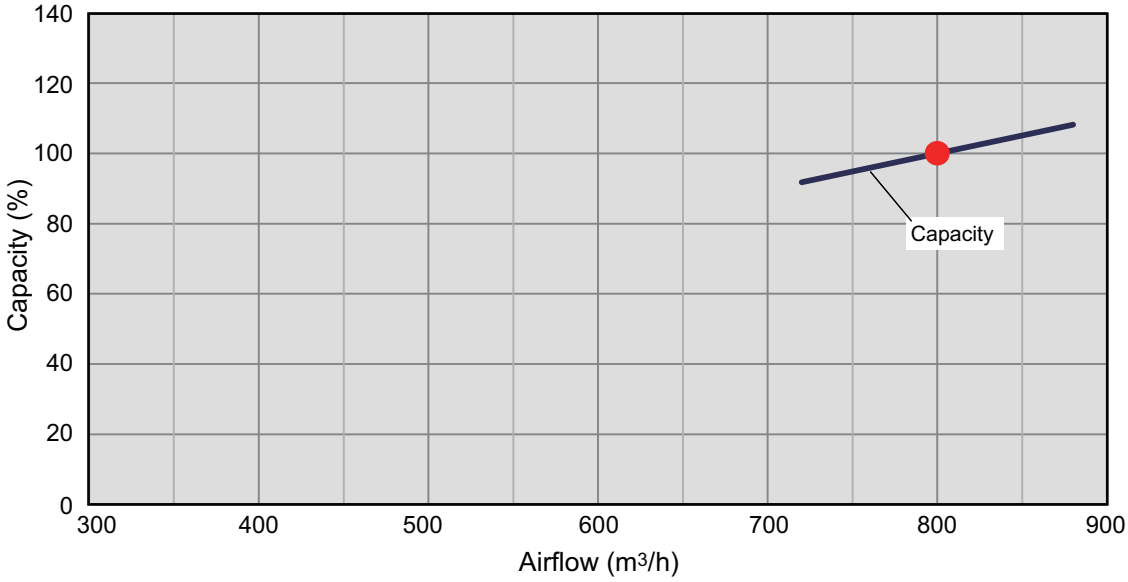

- **Heating**

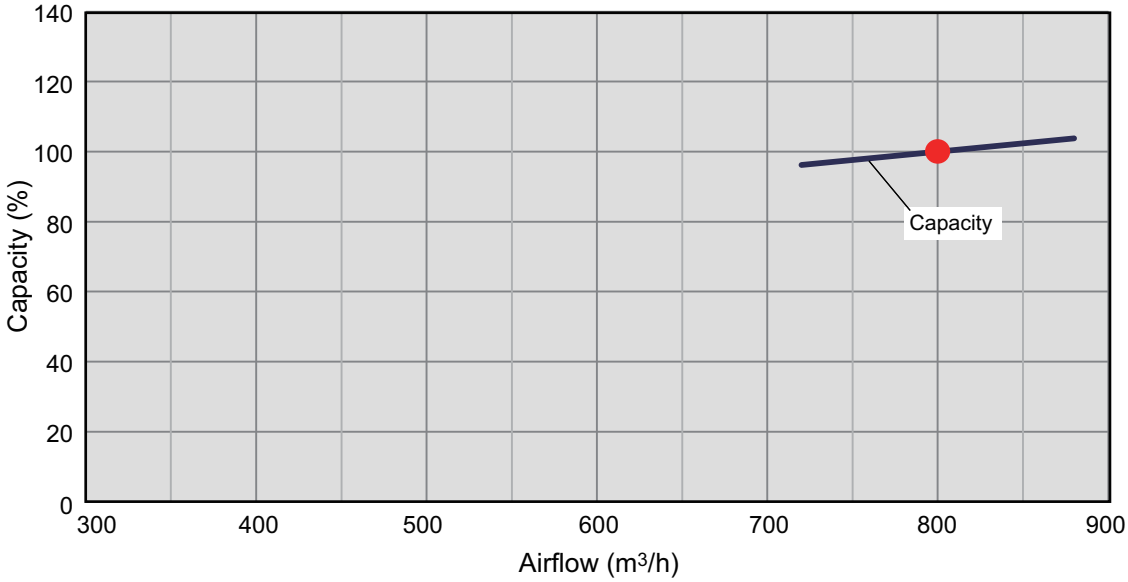

■ Model: ARXG18KSLAP

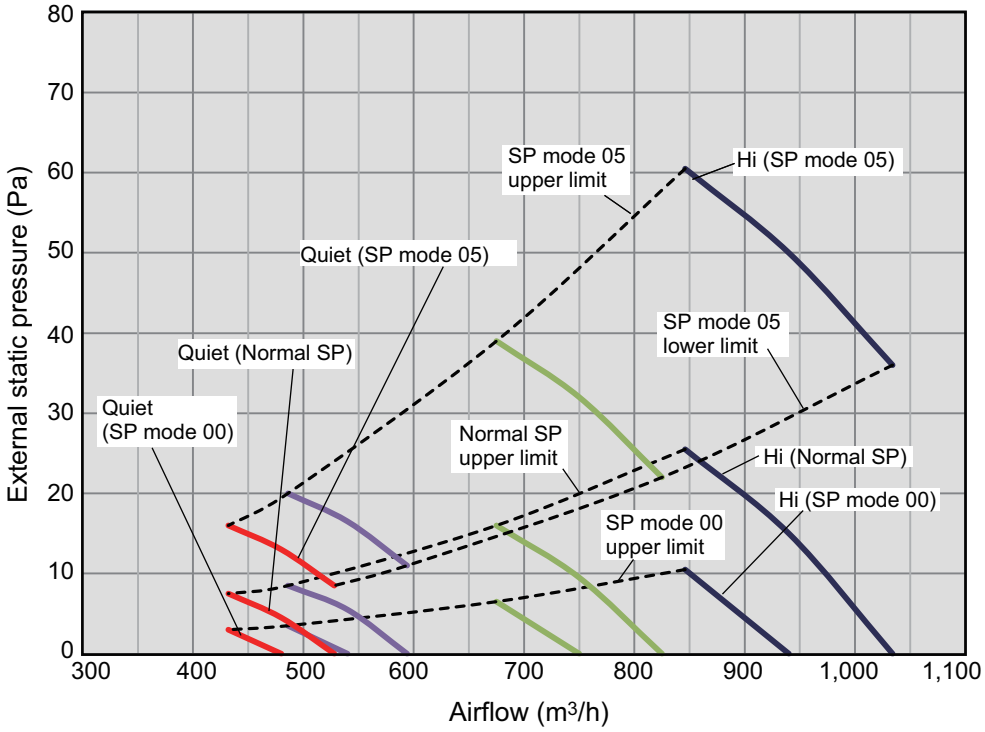

Available airflow rate range (High level)

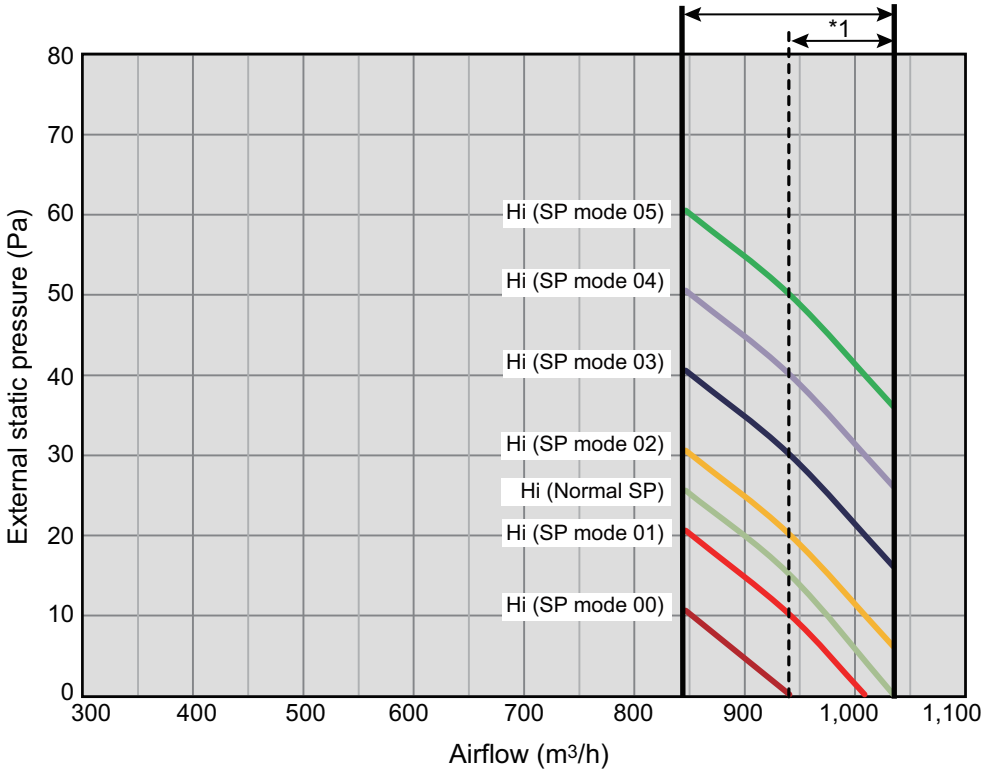

*1: Available airflow rate range when Auto louver grille (option) is installed.
Fan speed: HIGH
Vertical airflow direction louver: Up

● Characteristics of air volume and capacity

- **Cooling**

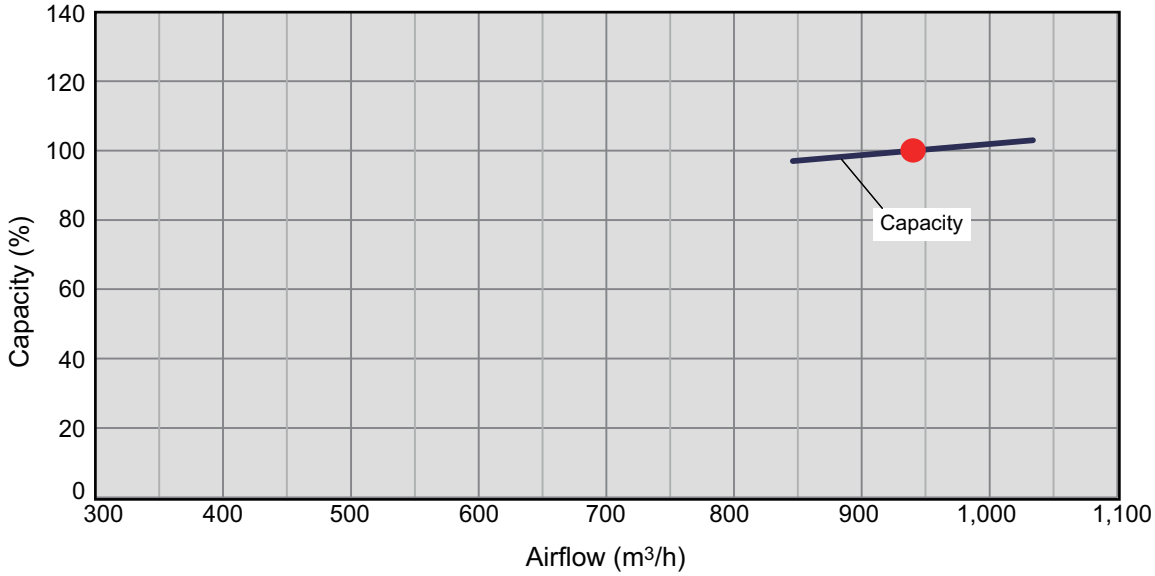

- **Heating**

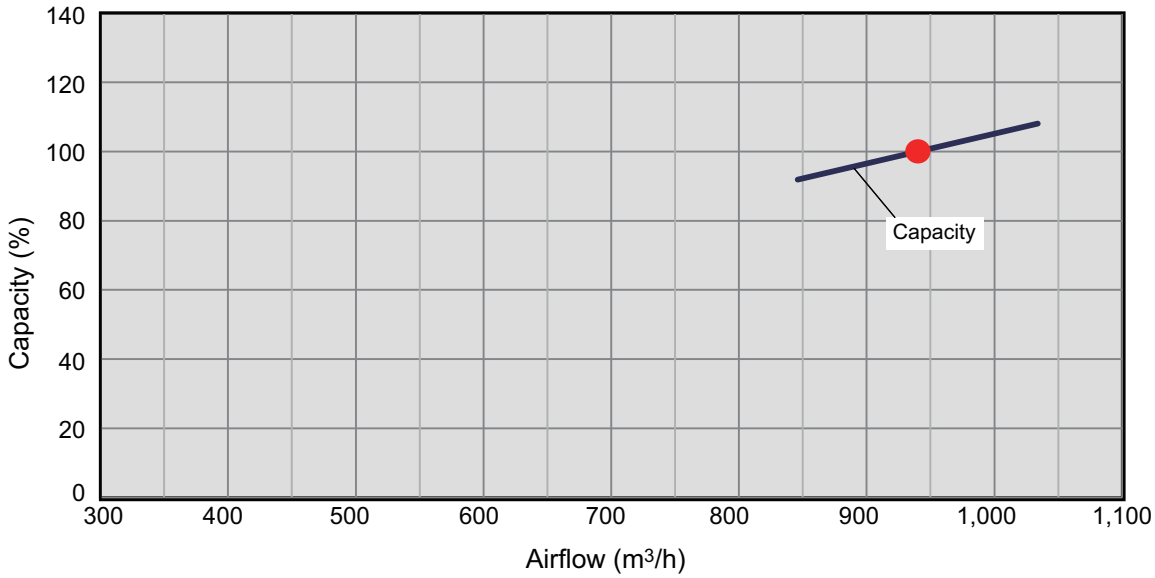

7-2. Slim duct type

■ Model: ARXG07KLLAP

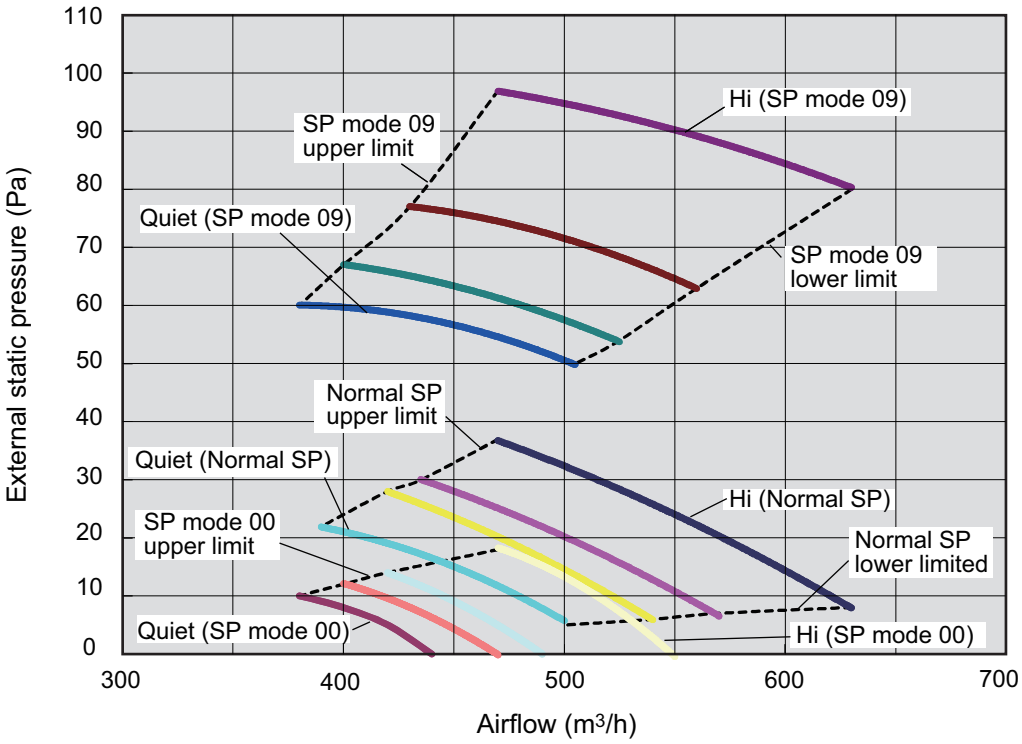

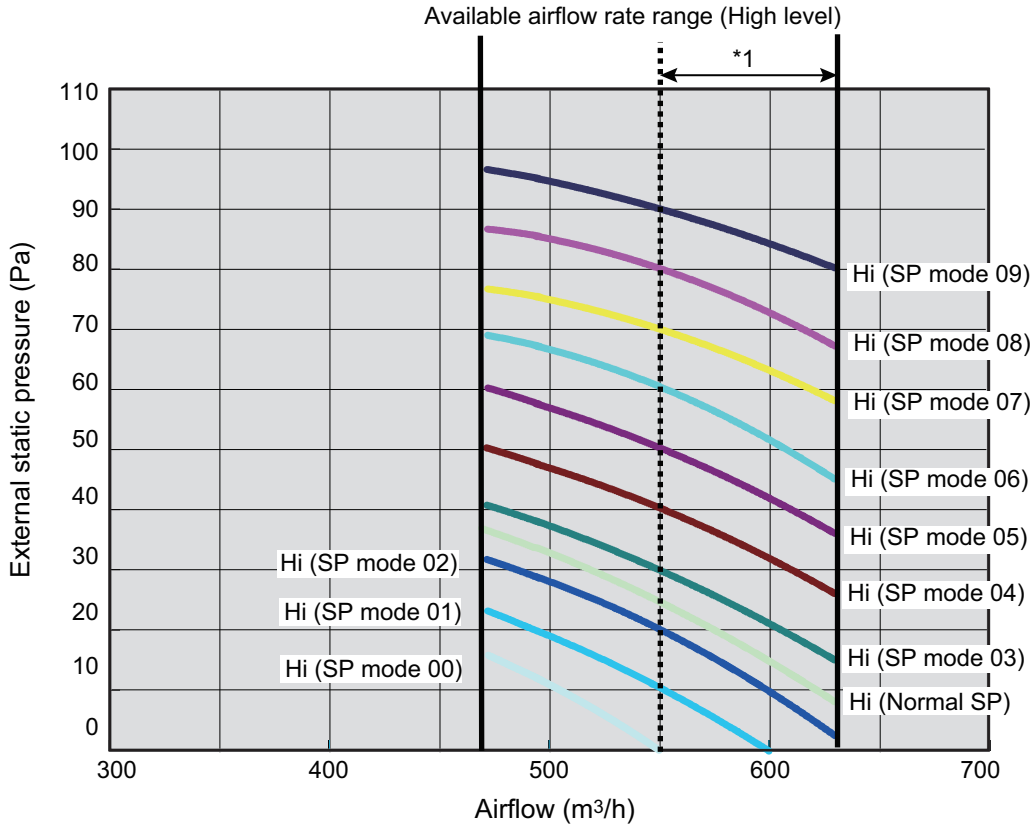

*1: Available airflow rate range when Auto louver grille (option) is installed.
Fan speed: HIGH
Vertical airflow direction louver: Up

● Characteristics of air volume and capacity

- **Cooling**

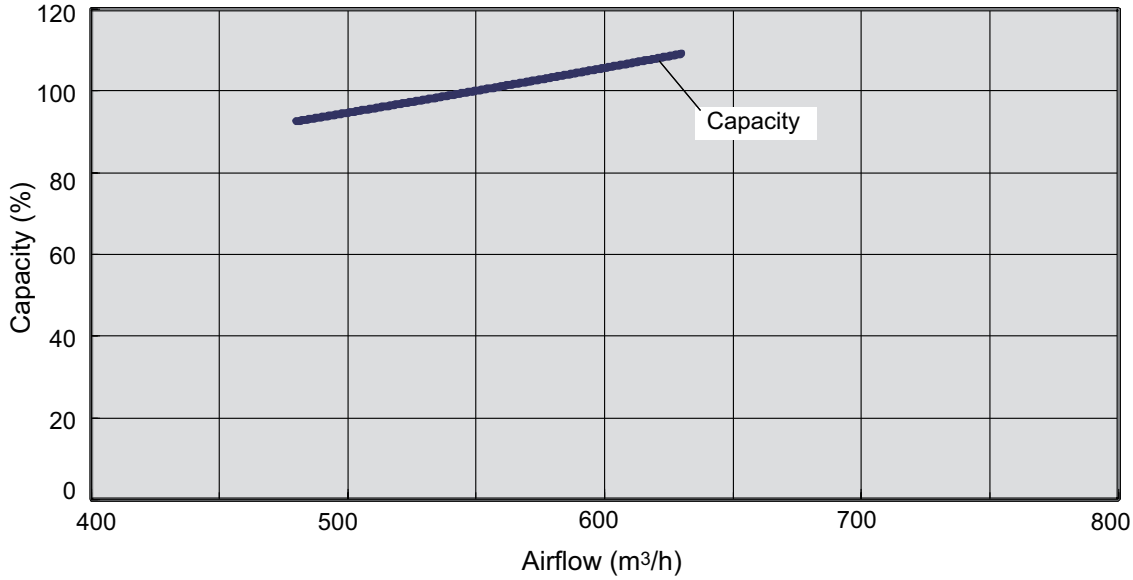

- **Heating**

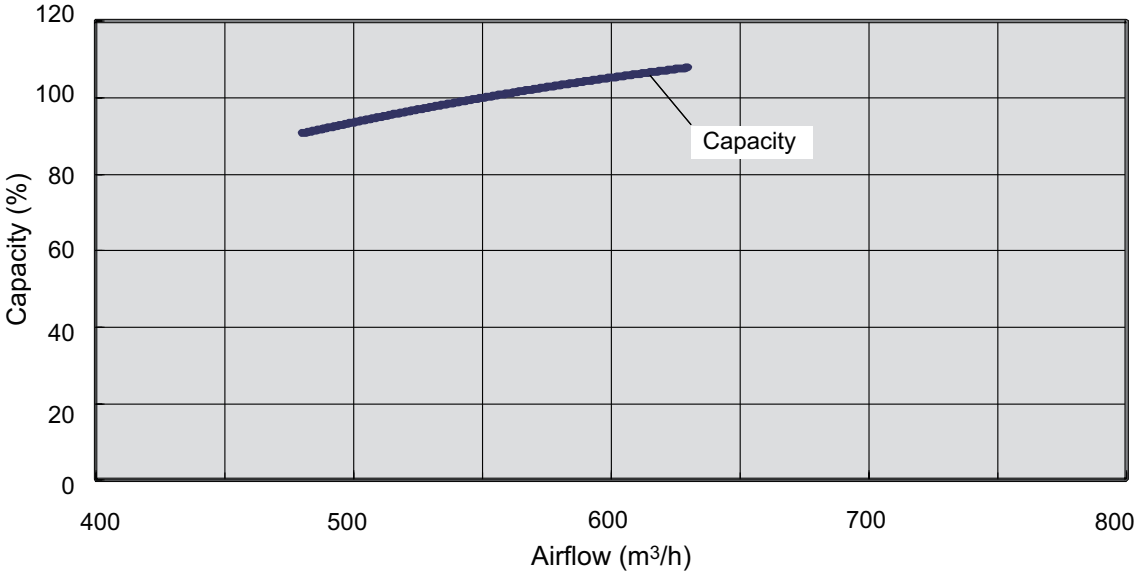

■ Model: ARXG09KLLAP

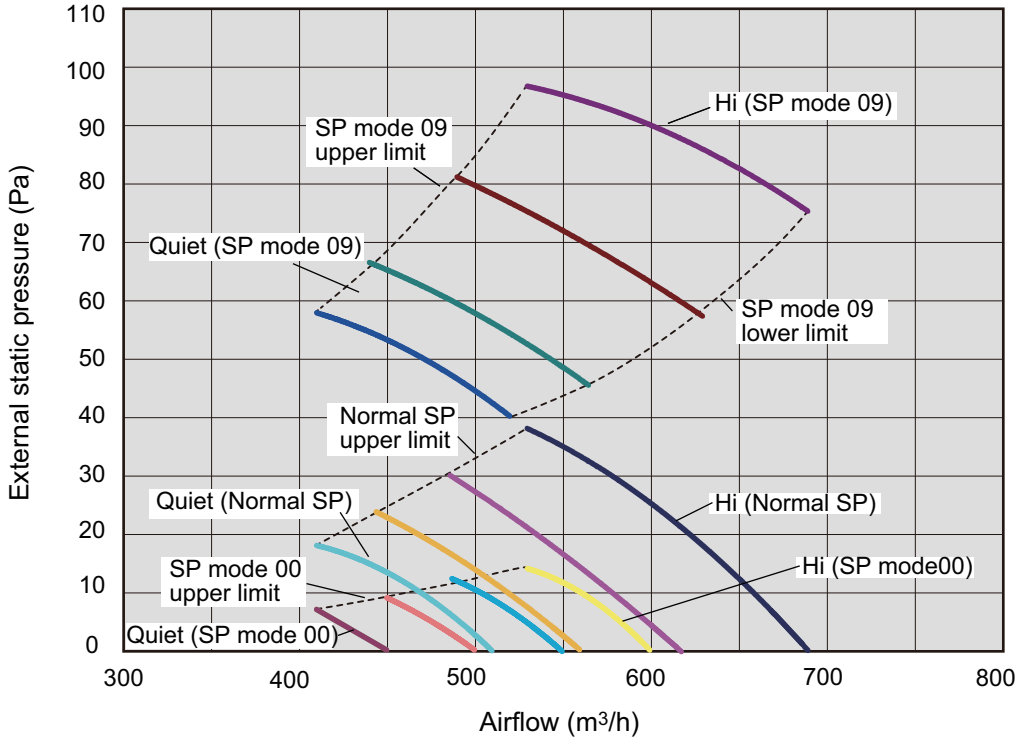

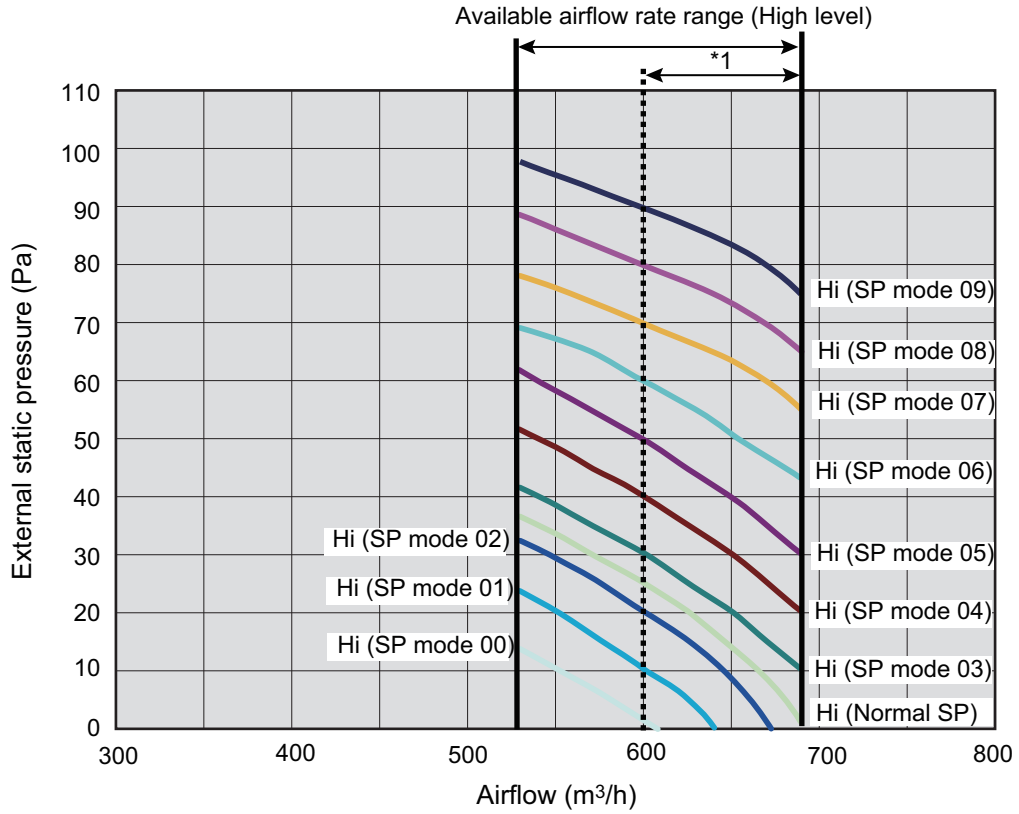

*1: Available airflow rate range when Auto louver grille (option) is installed.
Fan speed: HIGH
Vertical airflow direction louver: Up

● Characteristics of air volume and capacity

- **Cooling**

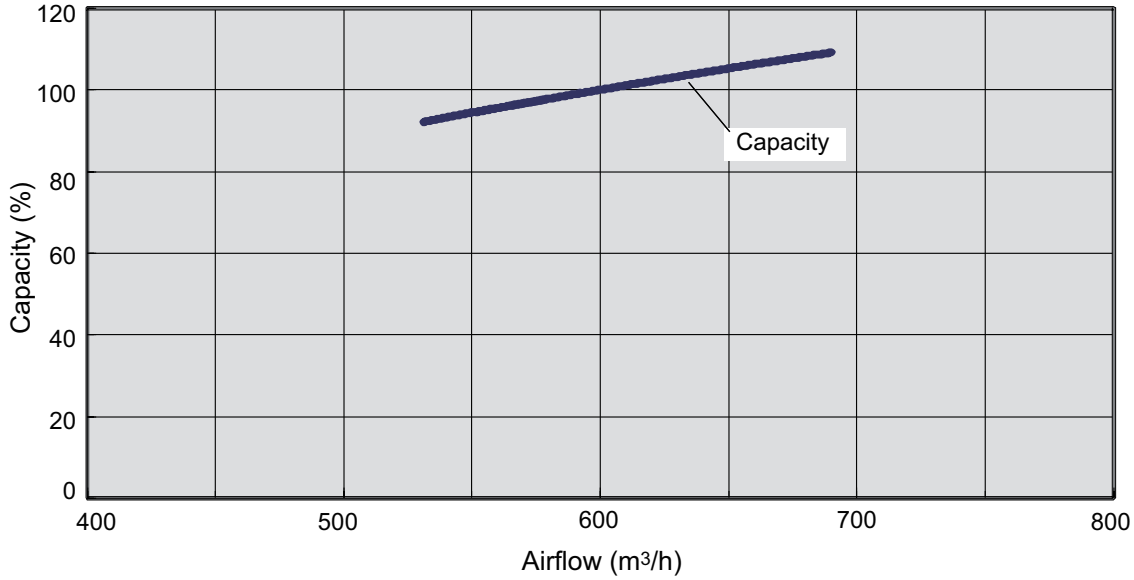

- **Heating**

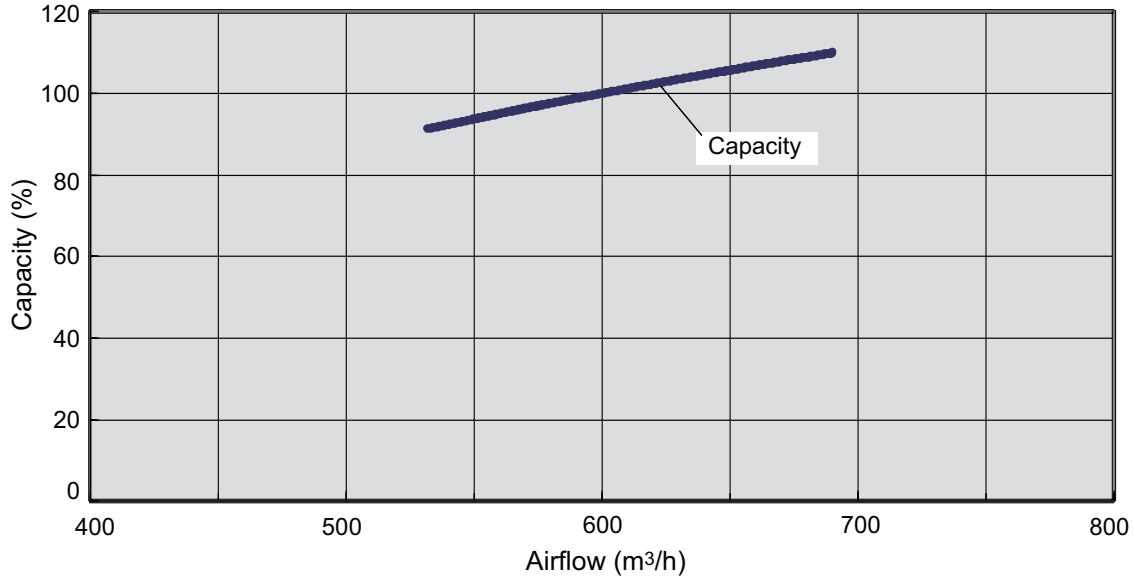

■ Model: ARXG12KLLAP

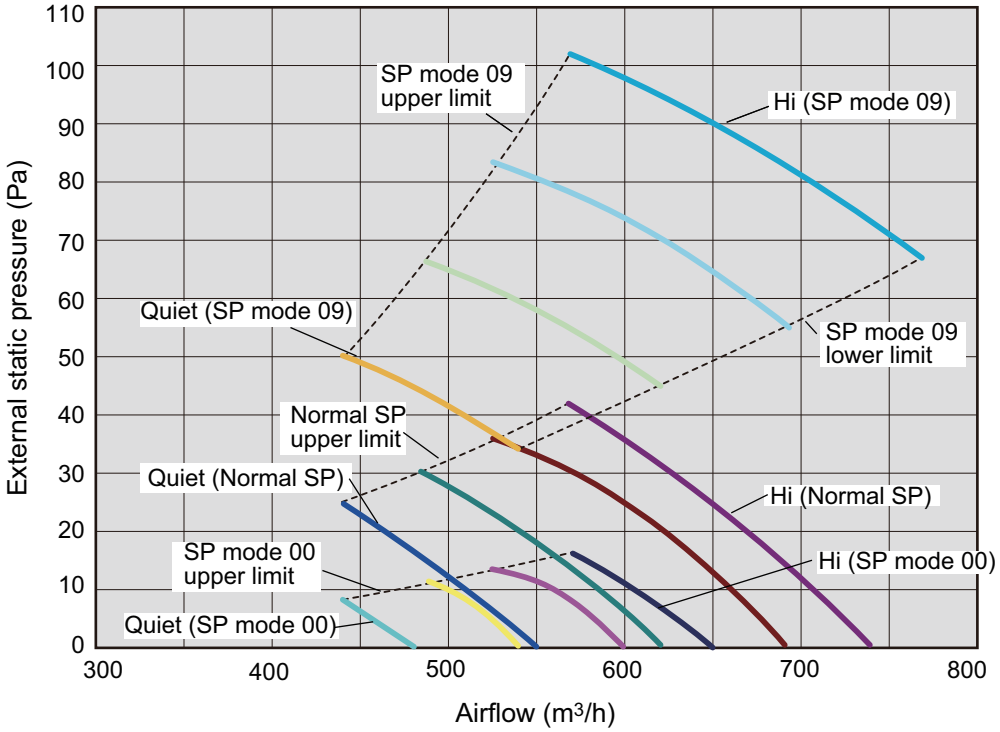

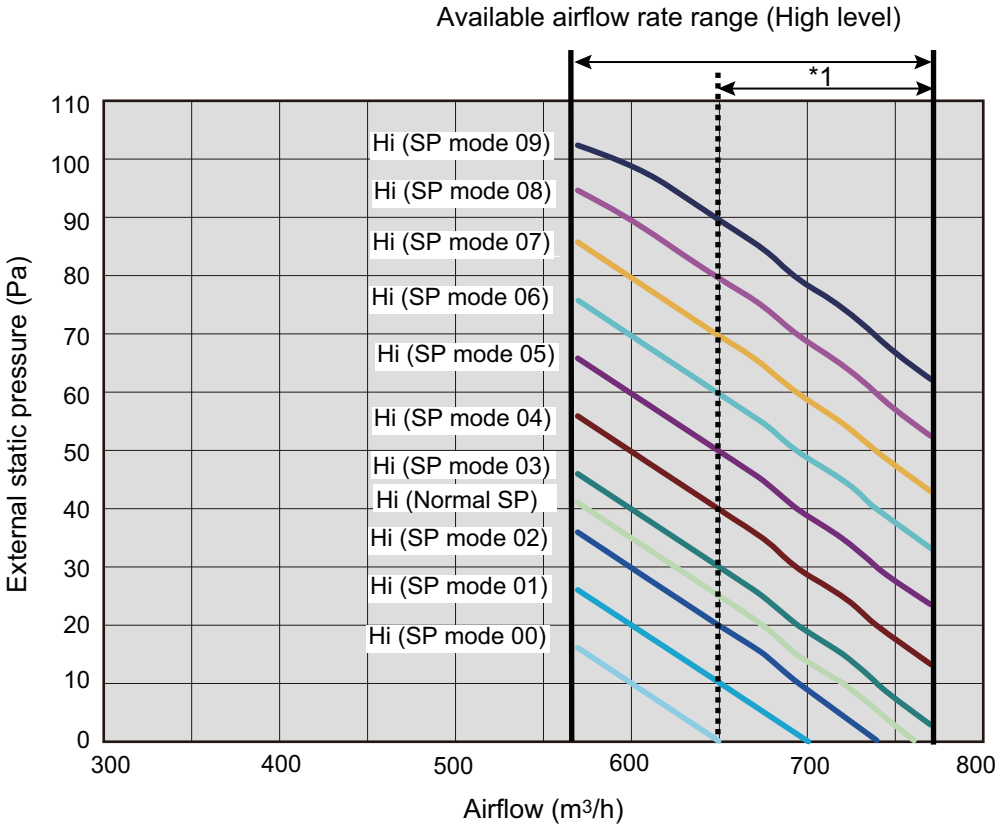

*1: Available airflow rate range when Auto louver grille (option) is installed.
Fan speed: HIGH
Vertical airflow direction louver: Up

● Characteristics of air volume and capacity

- **Cooling**

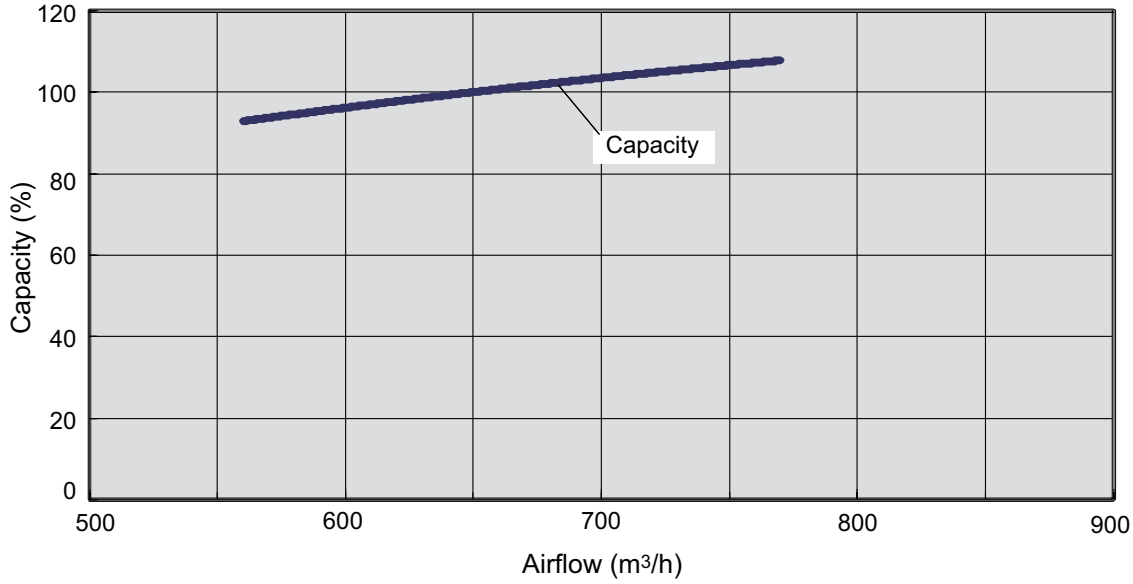

- **Heating**

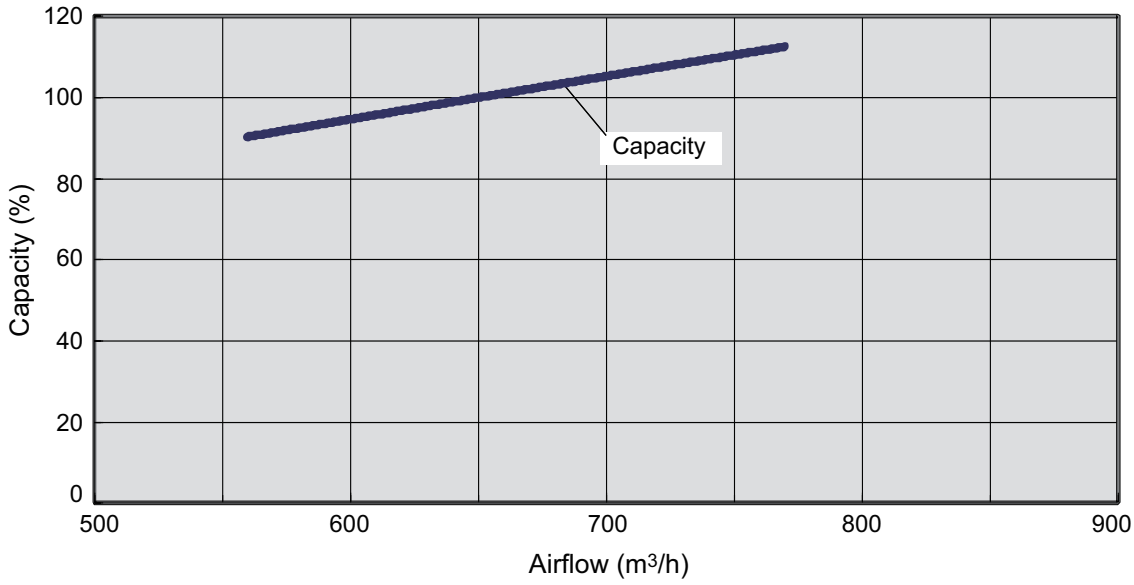

■ Model: ARXG14KLLAP

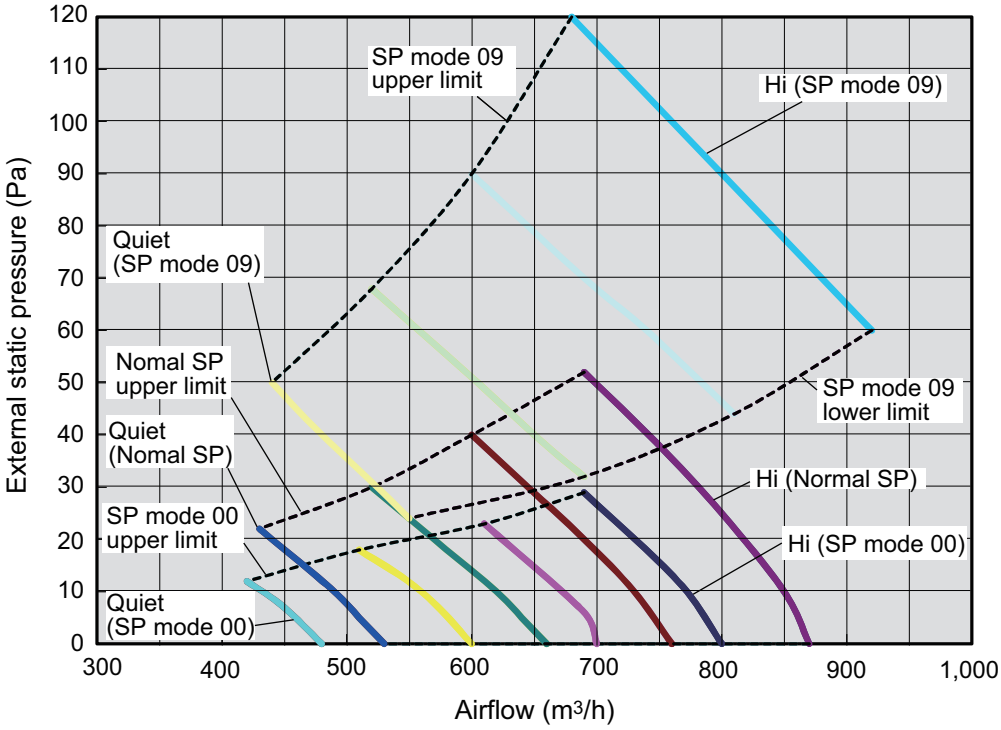

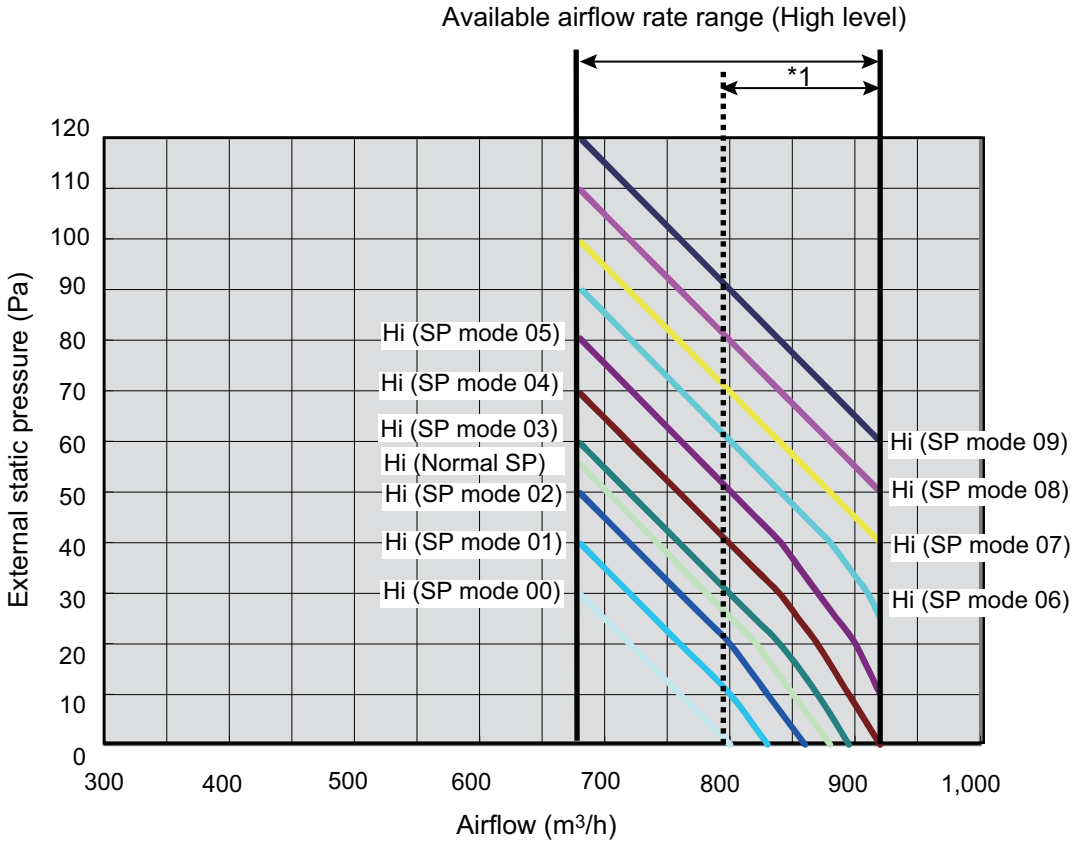

*1: Available airflow rate range when Auto louver grille (option) is installed.
Fan speed: HIGH
Vertical airflow direction louver: Up

● Characteristics of air volume and capacity

- **Cooling**

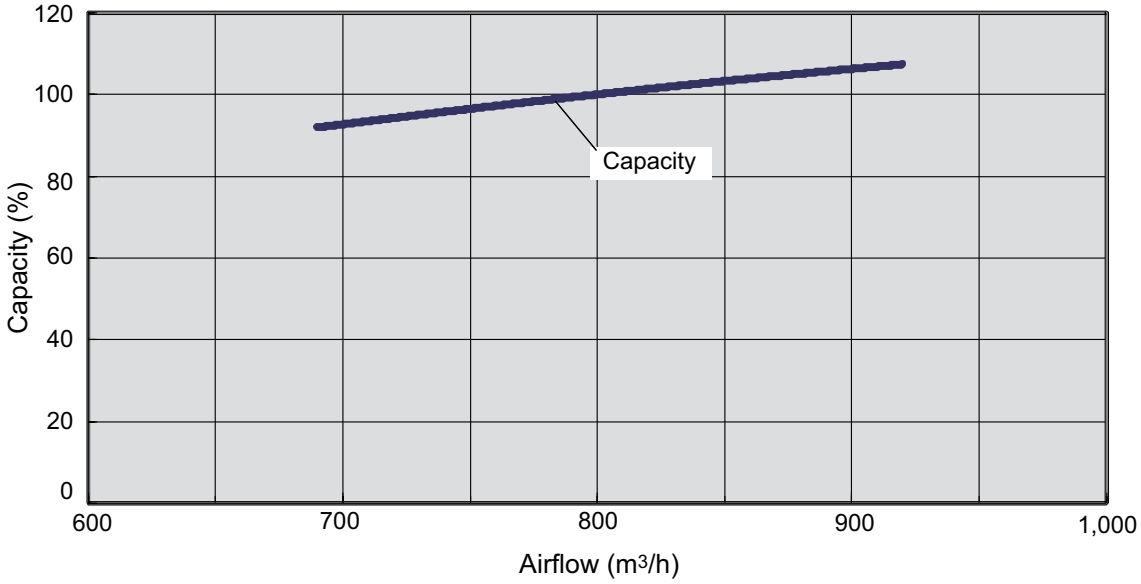

- **Heating**

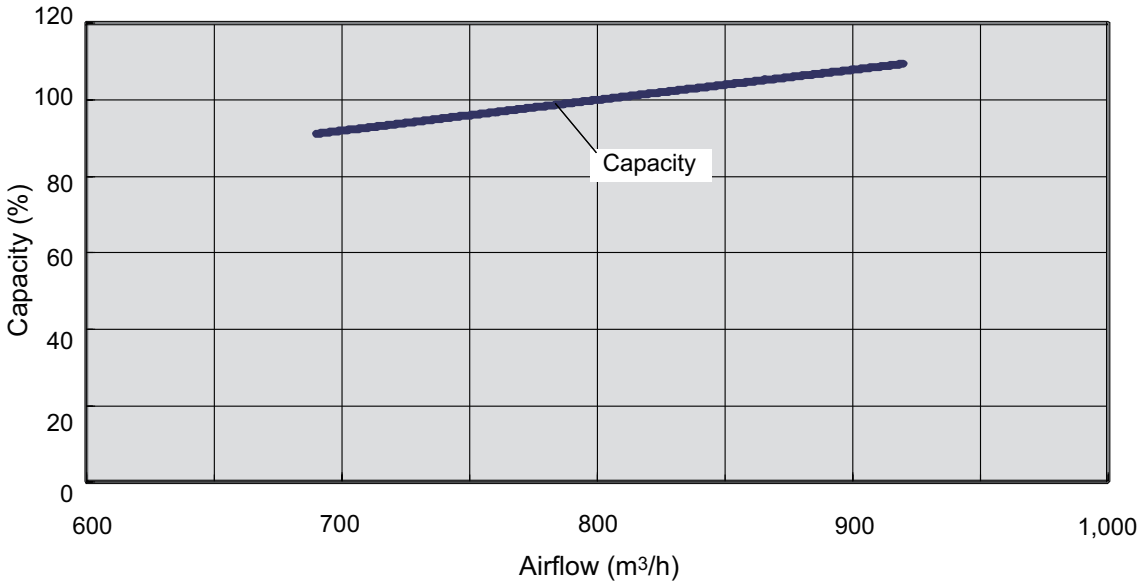

■ Model: ARXG18KLLAP

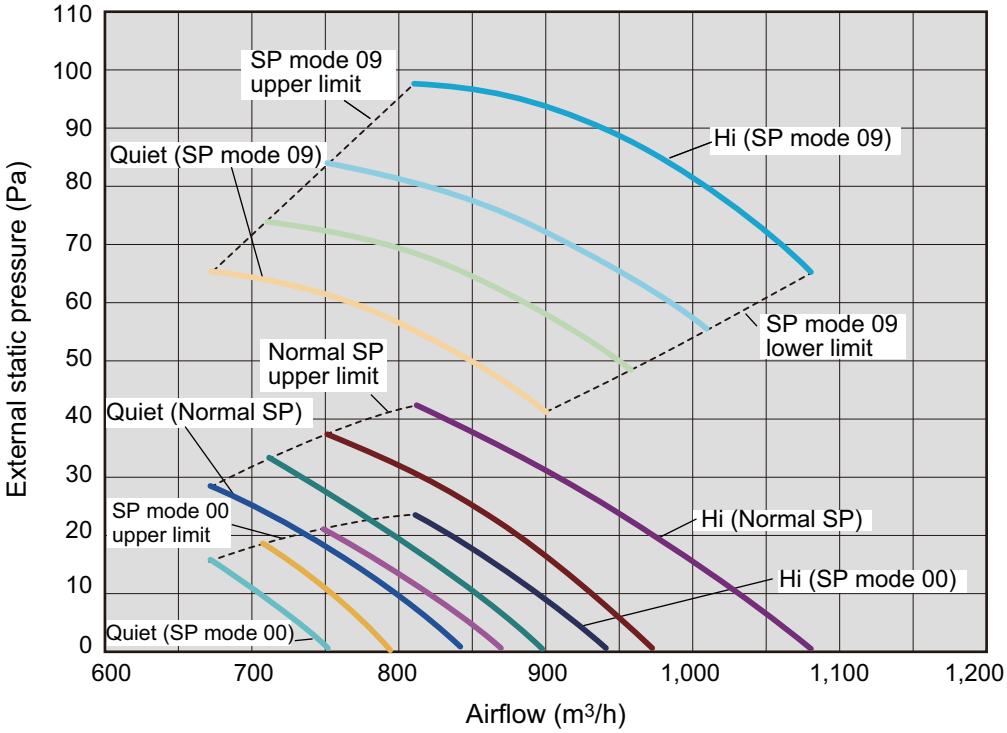

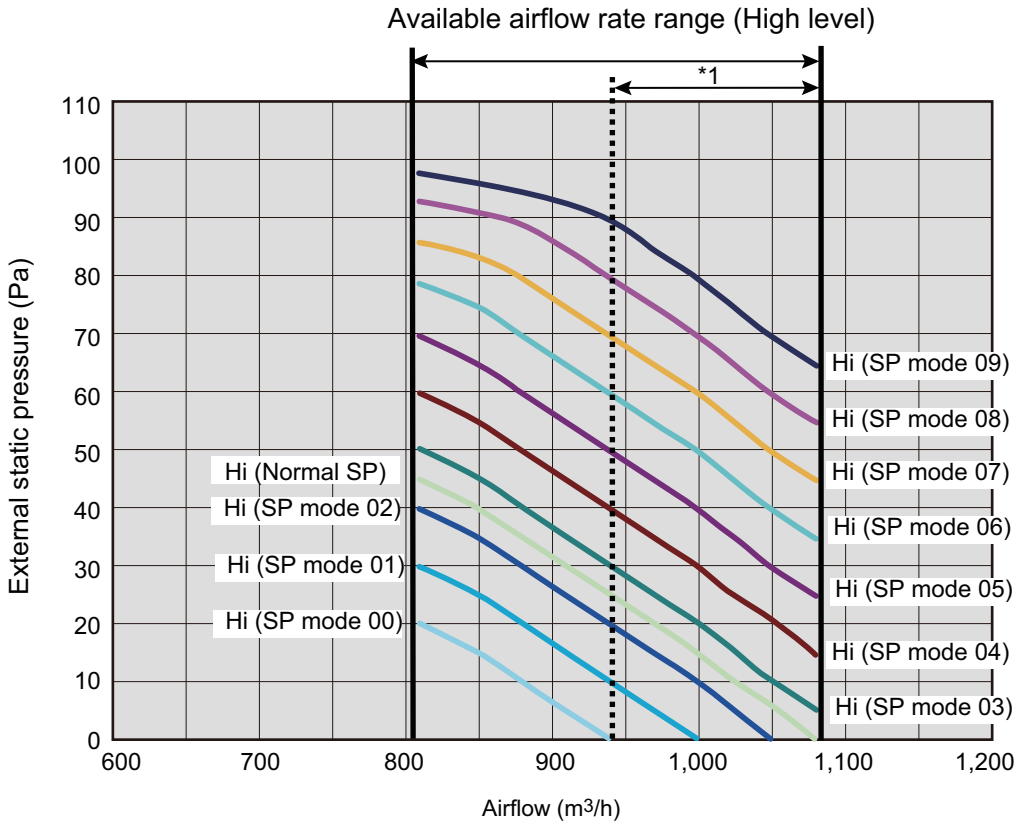

*1: Available airflow rate range when Auto louver grille (option) is installed.
Fan speed: HIGH
Vertical airflow direction louver: Up

4-5 UNIT
MULTI-SPLIT TYPE

● Characteristics of air volume and capacity

- **Cooling**

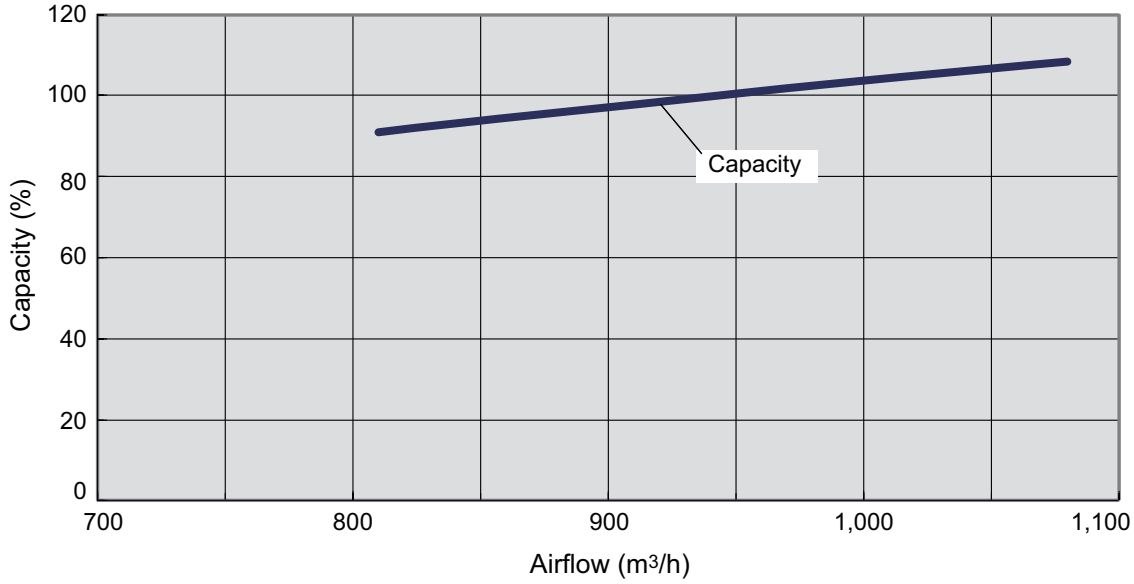

- **Heating**

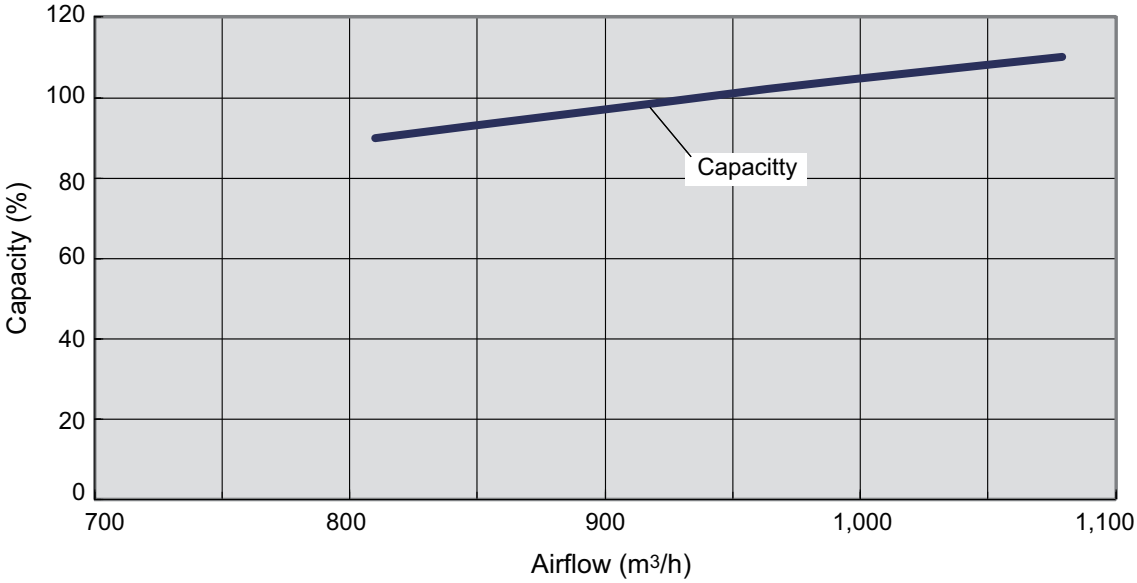

7-3. Medium static pressure duct type

■ Model: ARXG22KMLB (Normal mode)

Fan speed	Item	Static pressure (Pa)									
		6	8	11	14	18	21	25	30	35	40
HIGH	m^3/h	—	—	—	—	—	—	—	1200	1100	1000
	l/s	—	—	—	—	—	—	—	333	306	278
	CFM	—	—	—	—	—	—	—	706	647	589
MED	m^3/h	—	—	—	—	—	980	910	830	—	—
	l/s	—	—	—	—	—	272	253	231	—	—
	CFM	—	—	—	—	—	577	536	489	—	—
LOW	m^3/h	—	—	—	825	750	690	—	—	—	—
	l/s	—	—	—	229	208	192	—	—	—	—
	CFM	—	—	—	486	441	406	—	—	—	—
QUIET	m^3/h	630	580	525	—	—	—	—	—	—	—
	l/s	175	161	146	—	—	—	—	—	—	—
	CFM	371	341	309	—	—	—	—	—	—	—

Q-h Characteristic curve

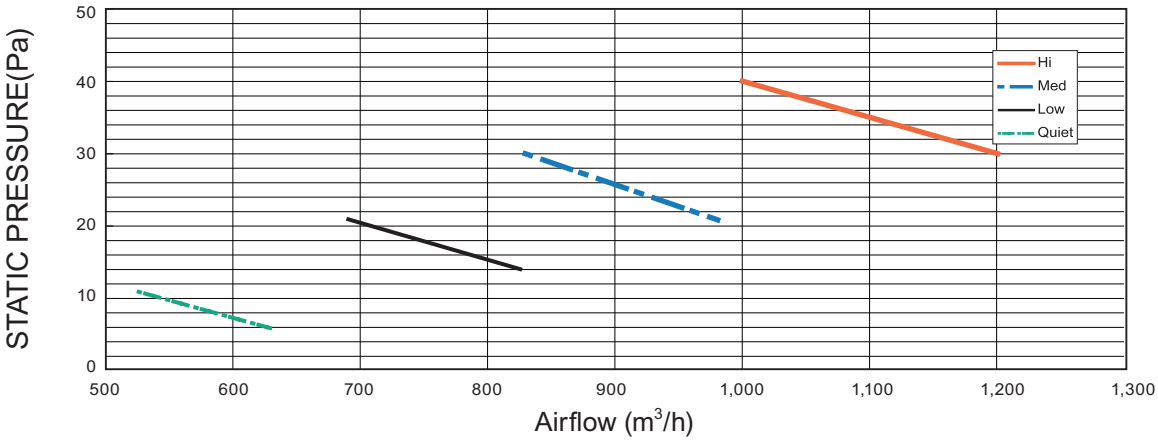

COOLING

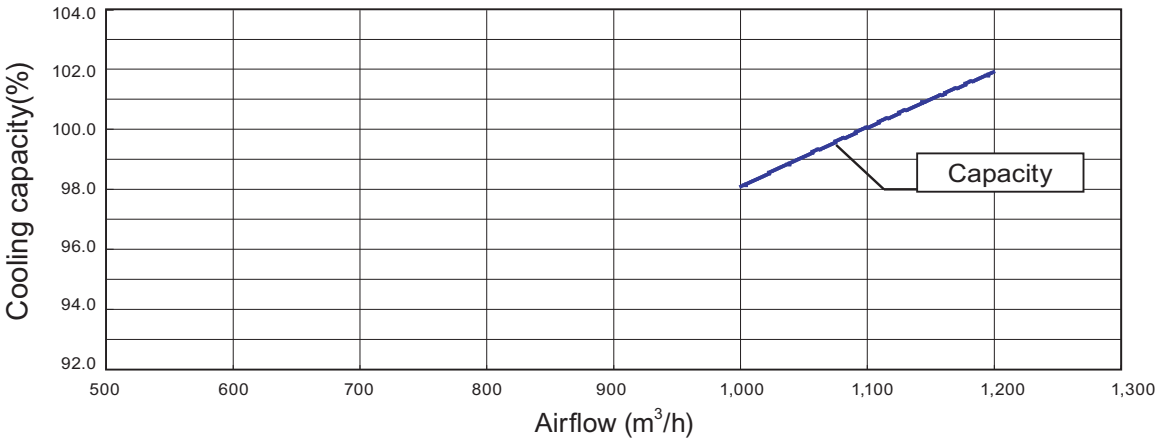

HEATING

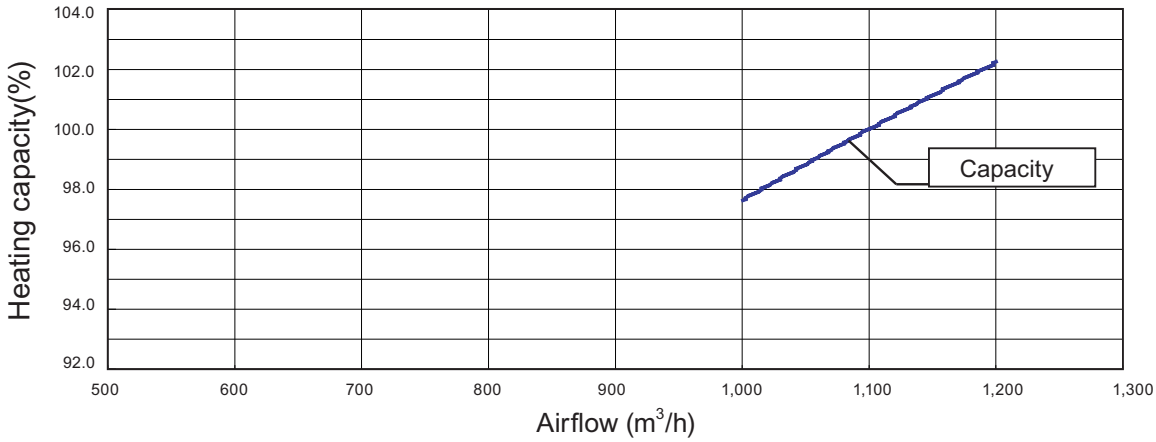

■ Model: ARXG22KMLB (Static pressure mode 1)

Fan speed	Item	Static pressure (Pa)							
		20	23	30	35	40	47	55	65
HIGH	m^3/h	—	—	—	—	—	—	1200	1000
	l/s	—	—	—	—	—	—	333	278
	CFM	—	—	—	—	—	—	706	589
MED	m^3/h	—	—	—	—	1000	815	—	—
	l/s	—	—	—	—	278	226	—	—
	CFM	—	—	—	—	589	480	—	—
LOW	m^3/h	—	—	830	680	—	—	—	—
	l/s	—	—	231	189	—	—	—	—
	CFM	—	—	489	400	—	—	—	—
QUIET	m^3/h	650	540	—	—	—	—	—	—
	l/s	181	150	—	—	—	—	—	—
	CFM	383	318	—	—	—	—	—	—

Q-h Characteristic curve

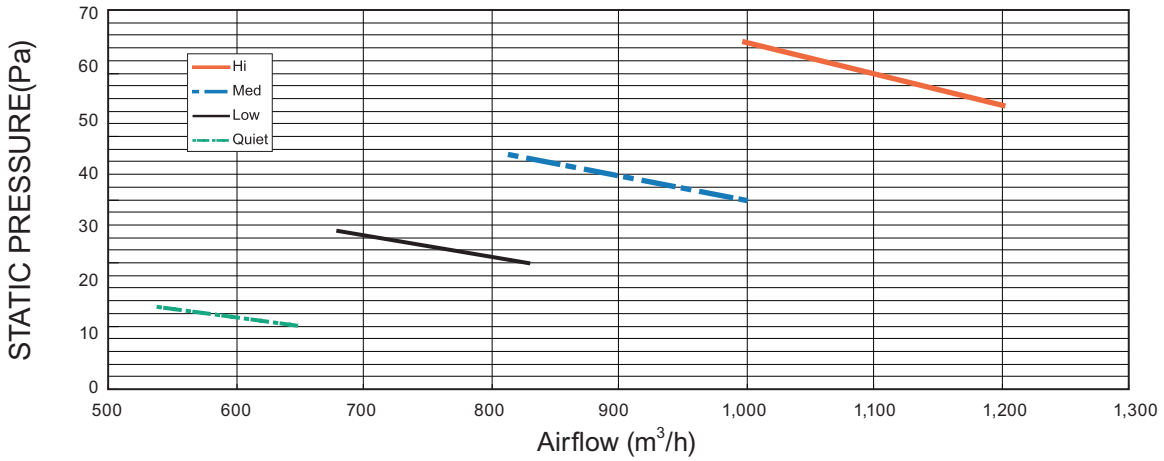

COOLING

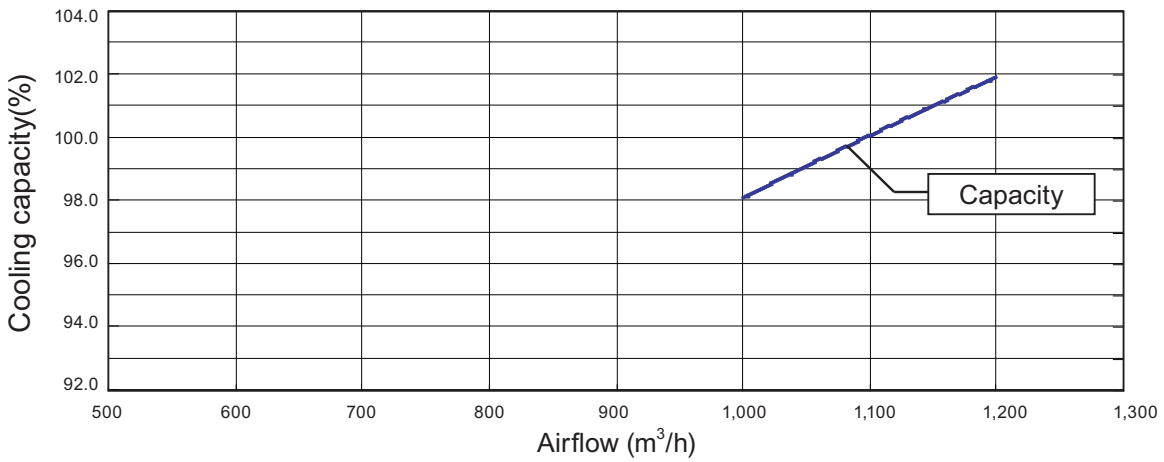

HEATING

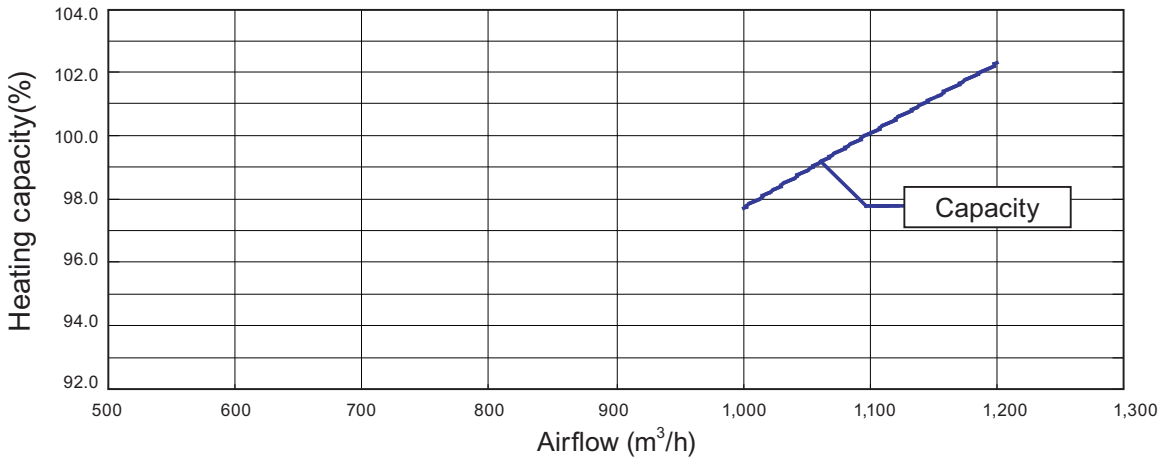

■ Model: ARXG22KMLB (Static pressure mode 2)

Fan speed	Item	Static pressure (Pa)							
		35	37	50	55	68	75	93	100
HIGH	m^3/h	—	—	—	—	—	—	1160	930
	l/s	—	—	—	—	—	—	322	258
	CFM	—	—	—	—	—	—	683	547
MED	m^3/h	—	—	—	—	1020	800	—	—
	l/s	—	—	—	—	283	222	—	—
	CFM	—	—	—	—	600	471	—	—
LOW	m^3/h	—	—	835	670	—	—	—	—
	l/s	—	—	232	186	—	—	—	—
	CFM	—	—	491	394	—	—	—	—
QUIET	m^3/h	660	530	—	—	—	—	—	—
	l/s	183	147	—	—	—	—	—	—
	CFM	388	312	—	—	—	—	—	—

Q-h Characteristic curve

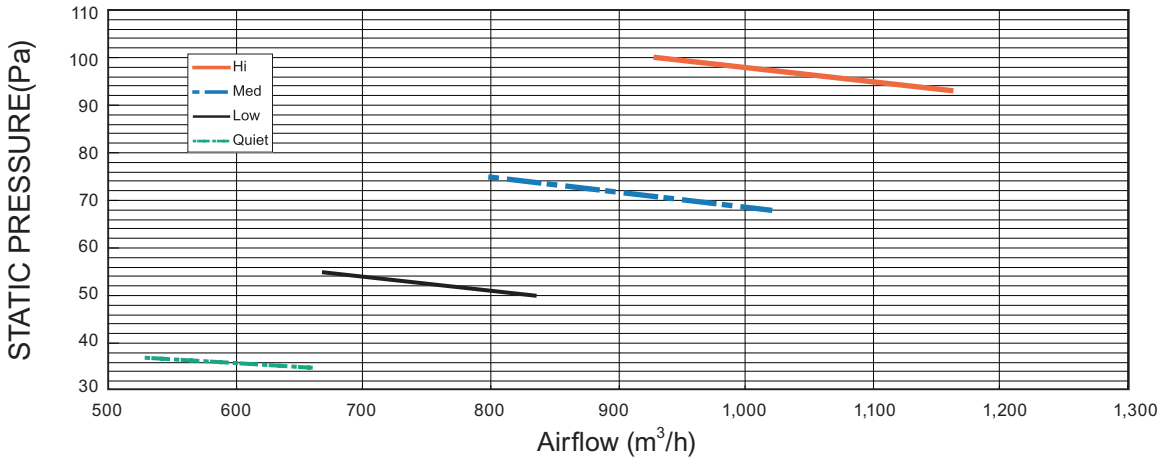

COOLING

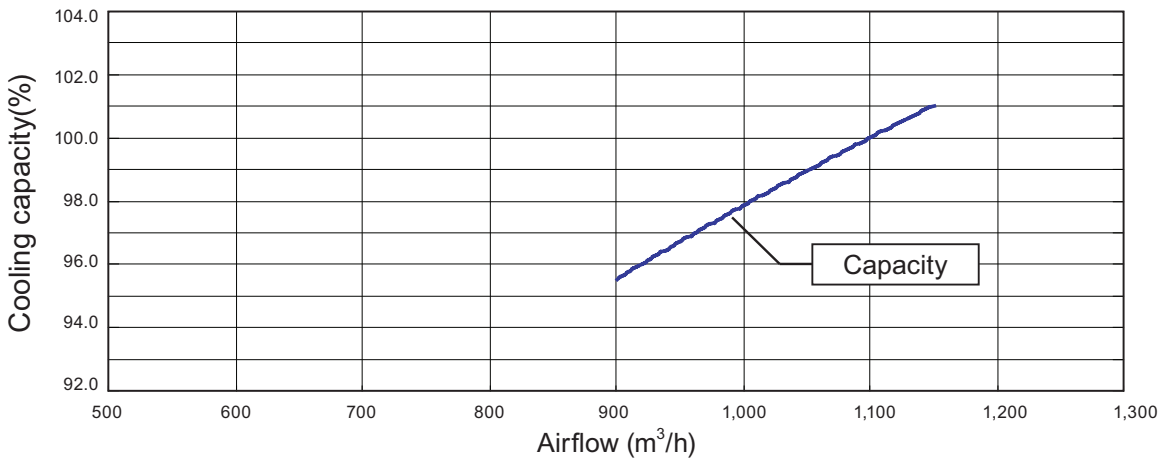

HEATING

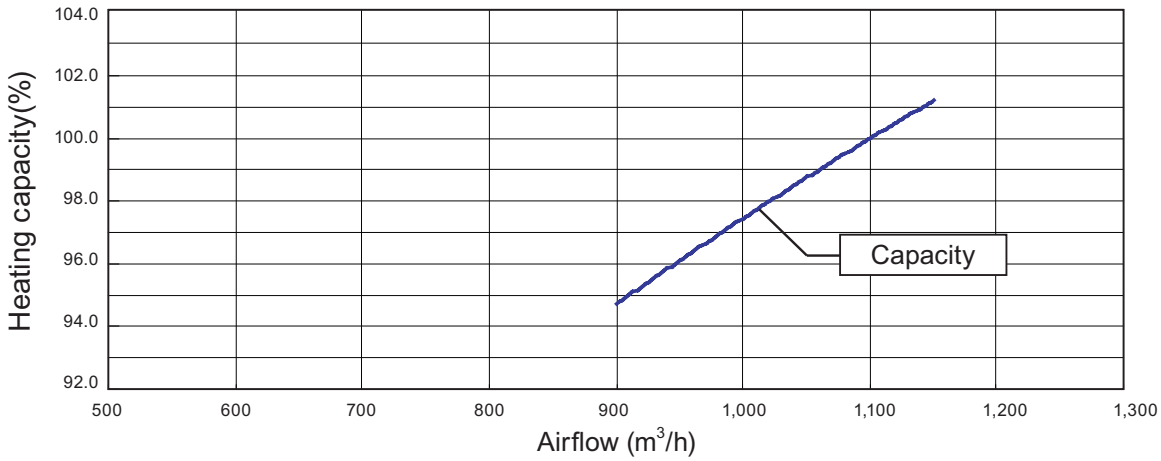

■ Model: ARXG22KMLB (Static pressure mode 3)

Fan speed	Item	Static pressure (Pa)							
		55	58	85	90	115	122	142	150
HIGH	m^3/h	—	—	—	—	—	—	1100	880
	l/s	—	—	—	—	—	—	306	244
	CFM	—	—	—	—	—	—	647	518
MED	m^3/h	—	—	—	—	1000	810	—	—
	l/s	—	—	—	—	278	225	—	—
	CFM	—	—	—	—	589	477	—	—
LOW	m^3/h	—	—	840	680	—	—	—	—
	l/s	—	—	233	189	—	—	—	—
	CFM	—	—	494	400	—	—	—	—
QUIET	m^3/h	660	525	—	—	—	—	—	—
	l/s	183	146	—	—	—	—	—	—
	CFM	388	309	—	—	—	—	—	—

Q-h Characteristic curve

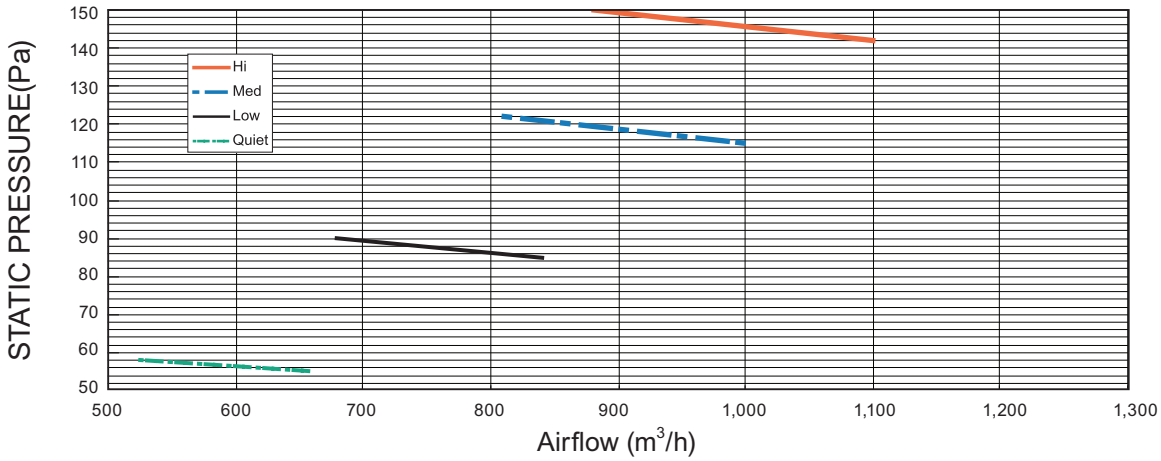

COOLING

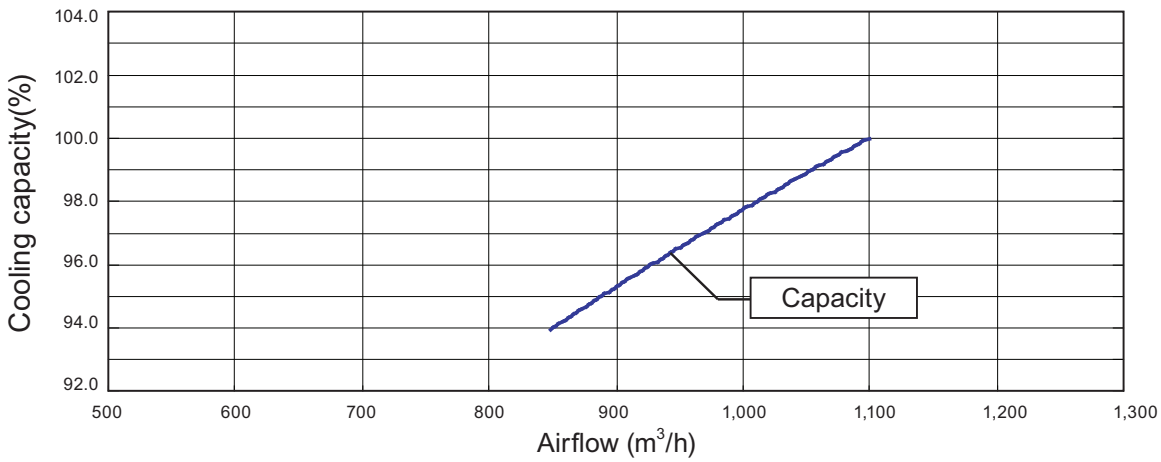

HEATING

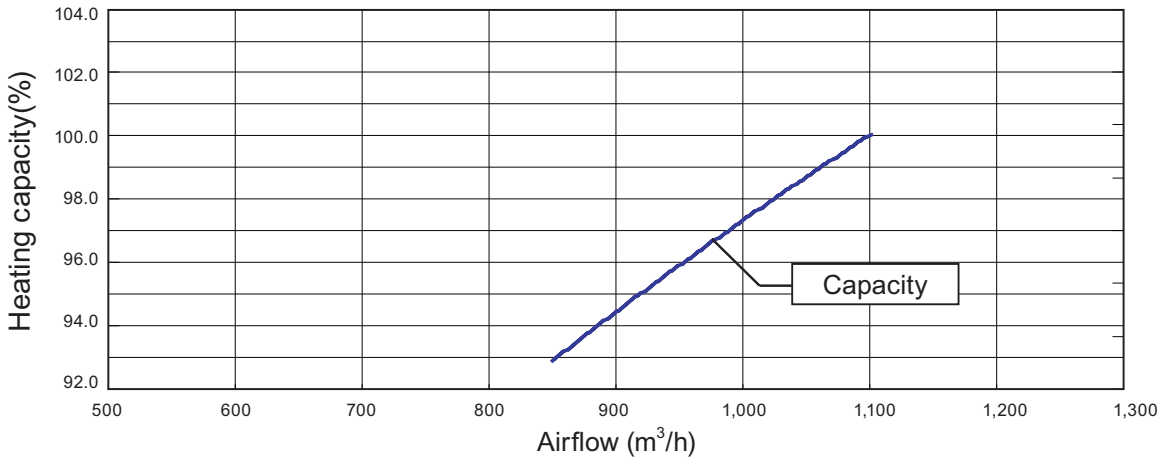

■ Model: ARXH12KMTAP

Fan performance curve 1

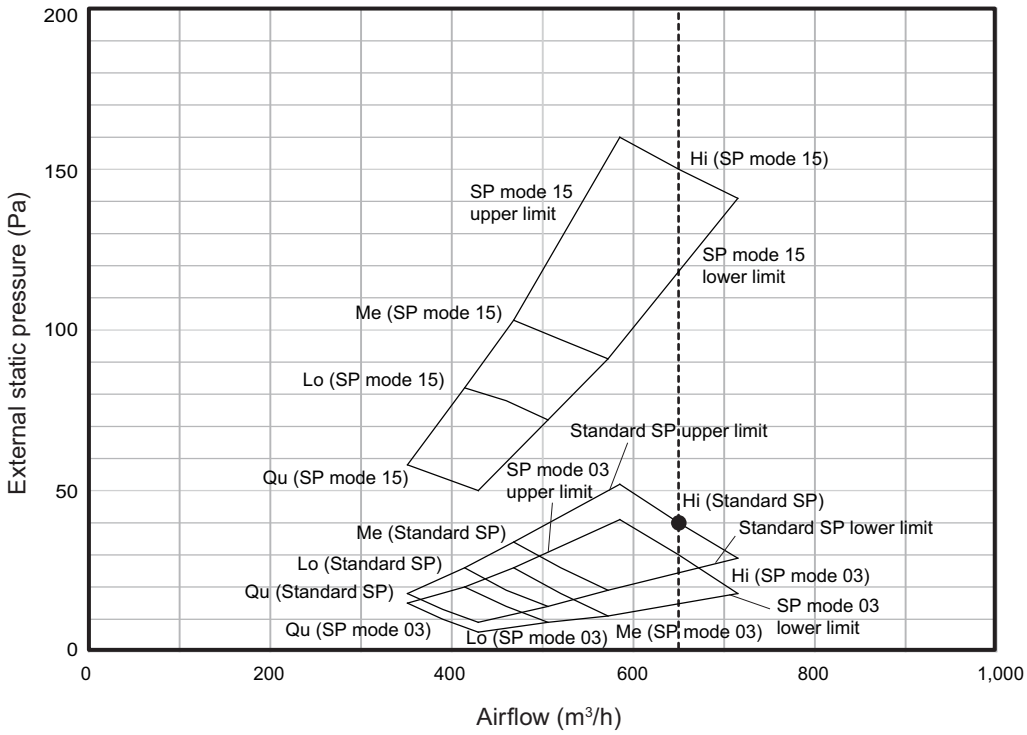

Fan performance curve 2
(For function setting by remote controller)

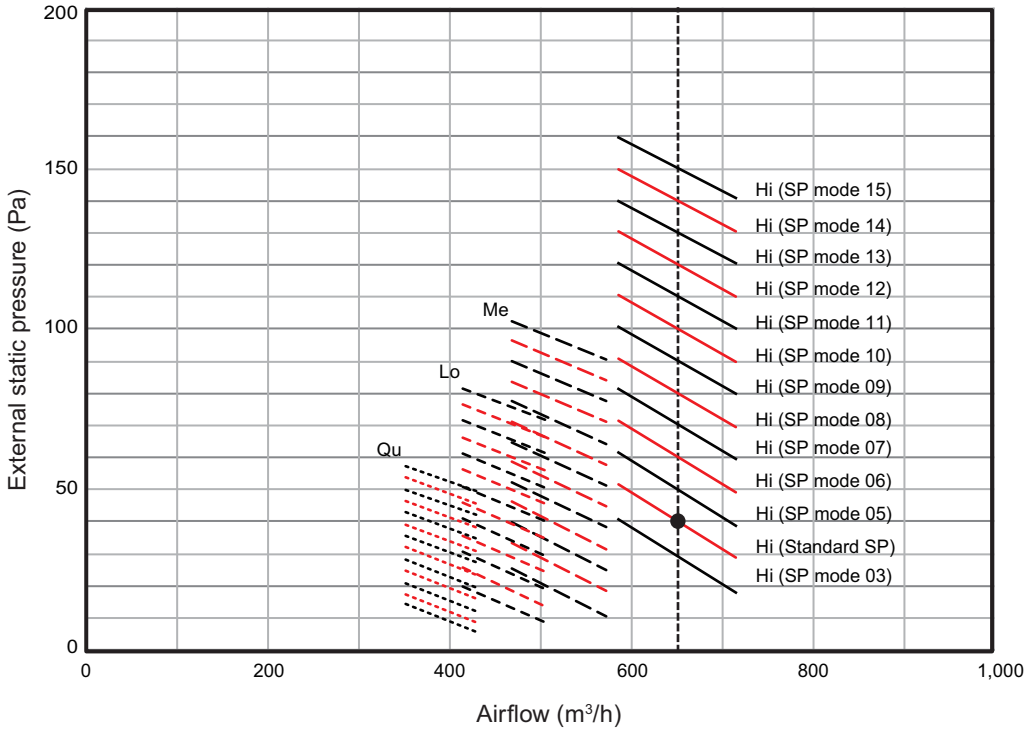

NOTES:

- Setting of the external static pressure is switchable into modes by using the remote controller.
- According to the resistance of the connecting duct, perform the setting of the external static pressure with referring “Fan performance curve 2” above.
- The default setting is set at “Standard SP”.

4-5 UNIT
MULTI-SPLIT TYPE

● Characteristics of air volume and capacity

- **Cooling**

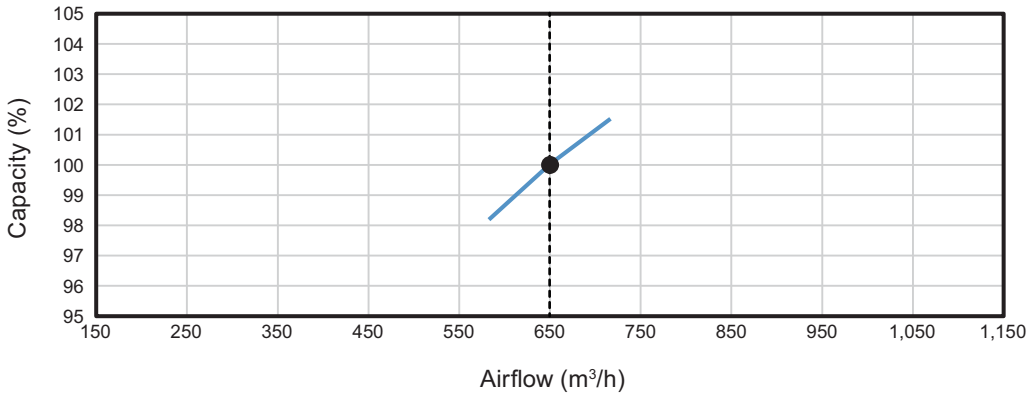

- **Heating**

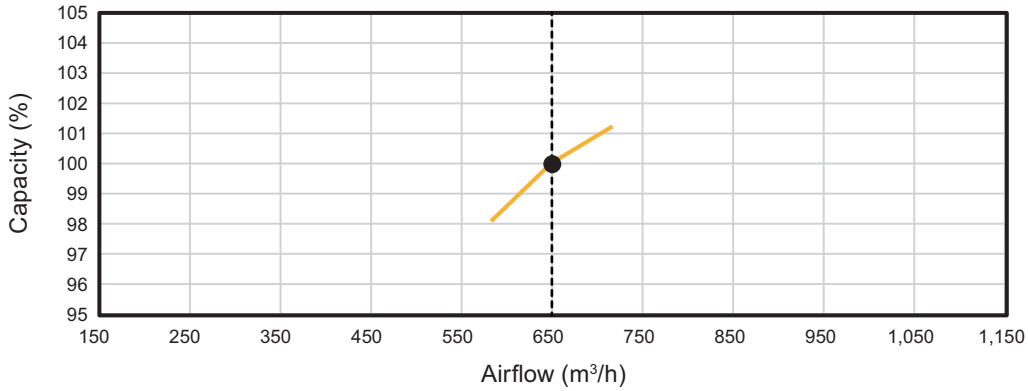

■ Model: ARXH14KMTAP

Fan performance curve 1

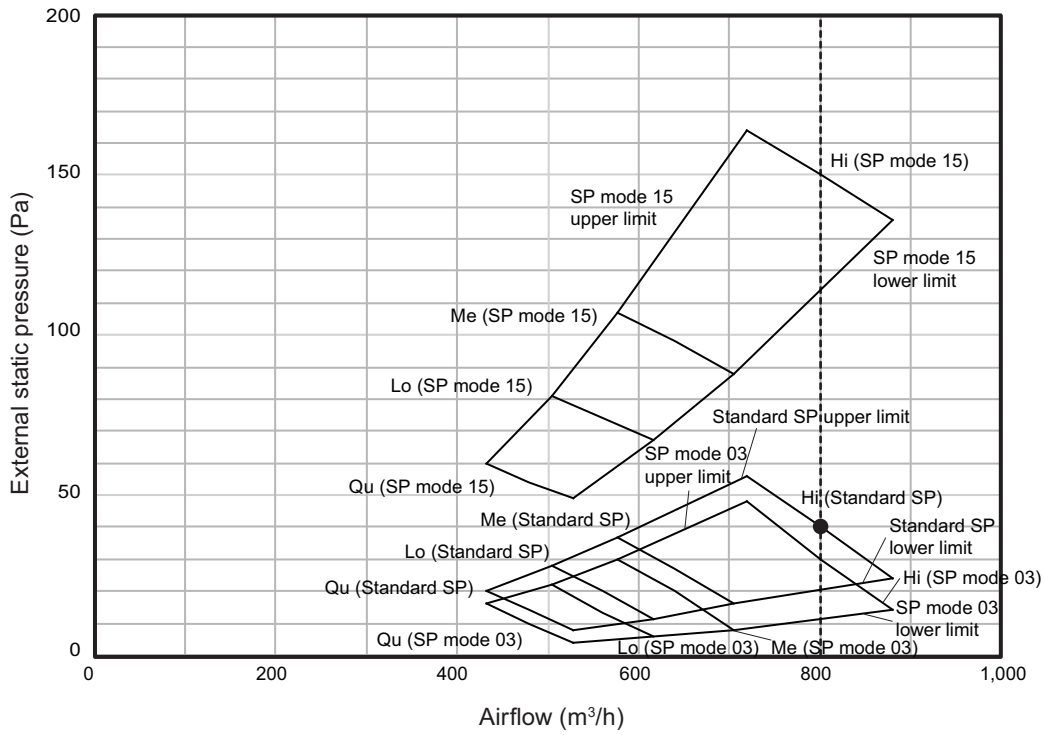

Fan performance curve 2
(For function setting by remote controller)

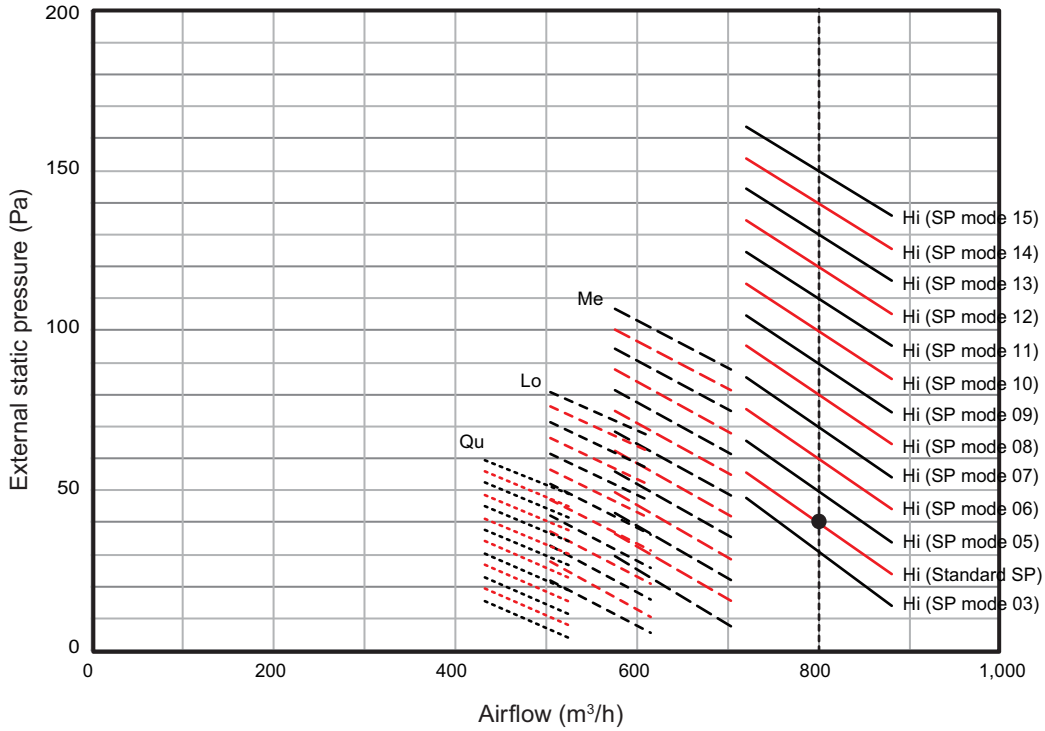

NOTES:

- Setting of the external static pressure is switchable into modes by using the remote controller.
- According to the resistance of the connecting duct, perform the setting of the external static pressure with referring “Fan performance curve 2” above.
- The default setting is set at “Standard SP”.

4-5 UNIT
MULTI-SPLIT TYPE

● Characteristics of air volume and capacity

- **Cooling**

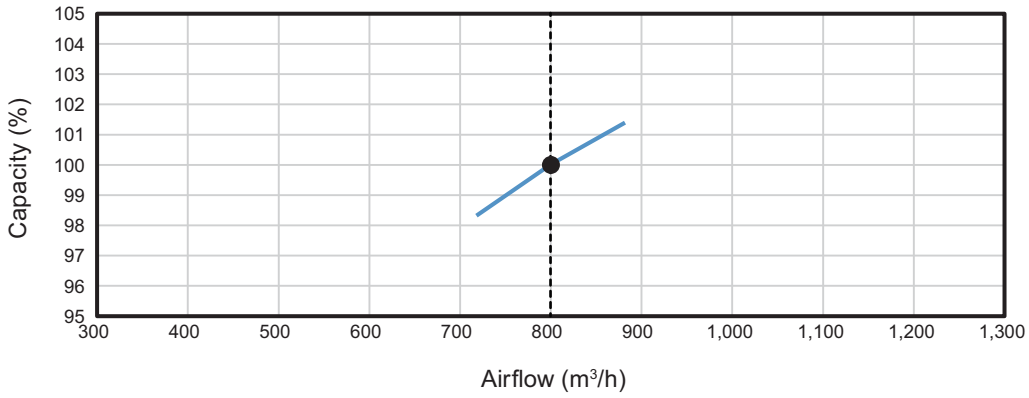

- **Heating**

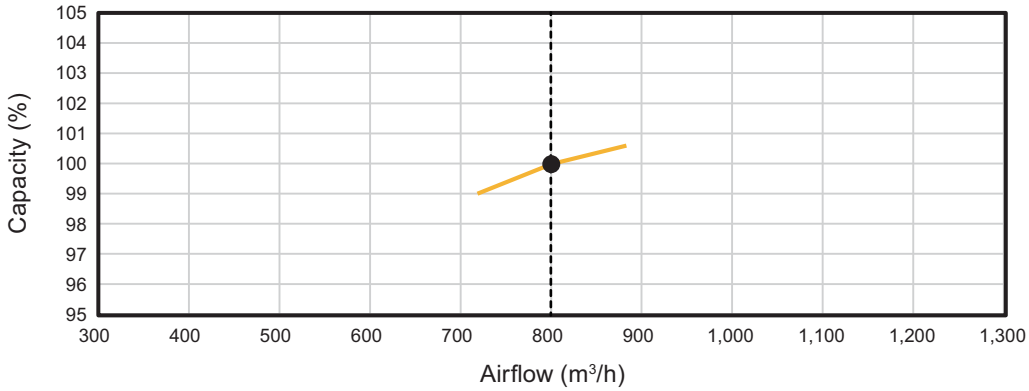

■ Model: ARXH18KMTAP

Fan performance curve 1

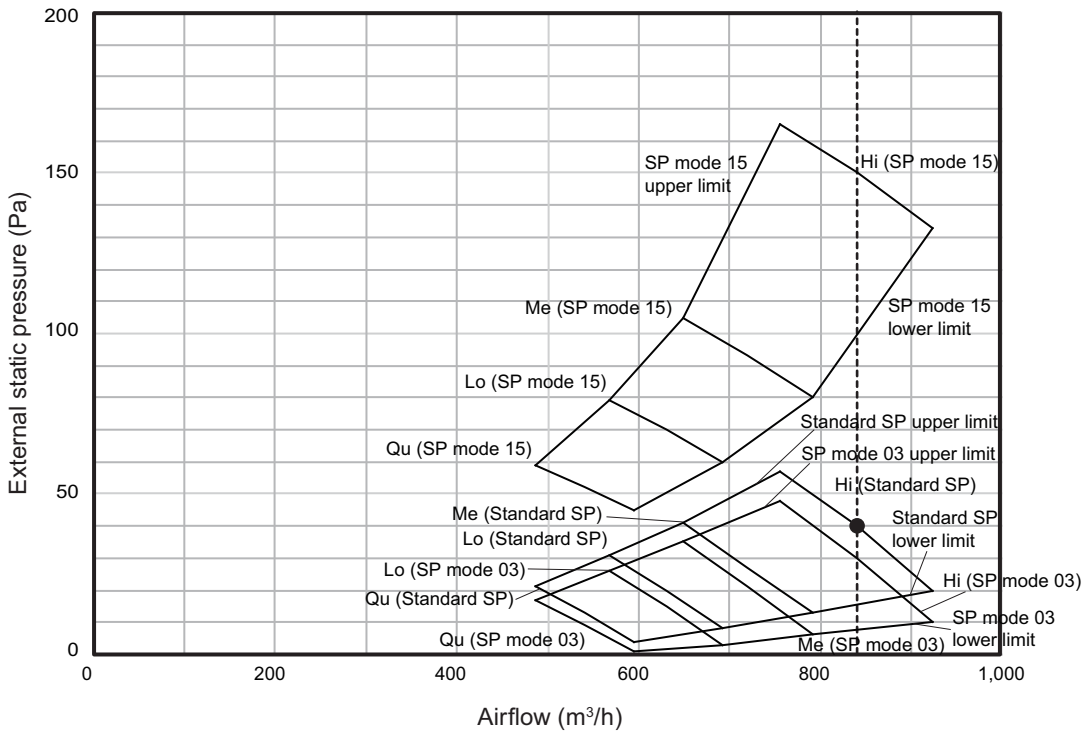

Fan performance curve 2
(For function setting by remote controller)

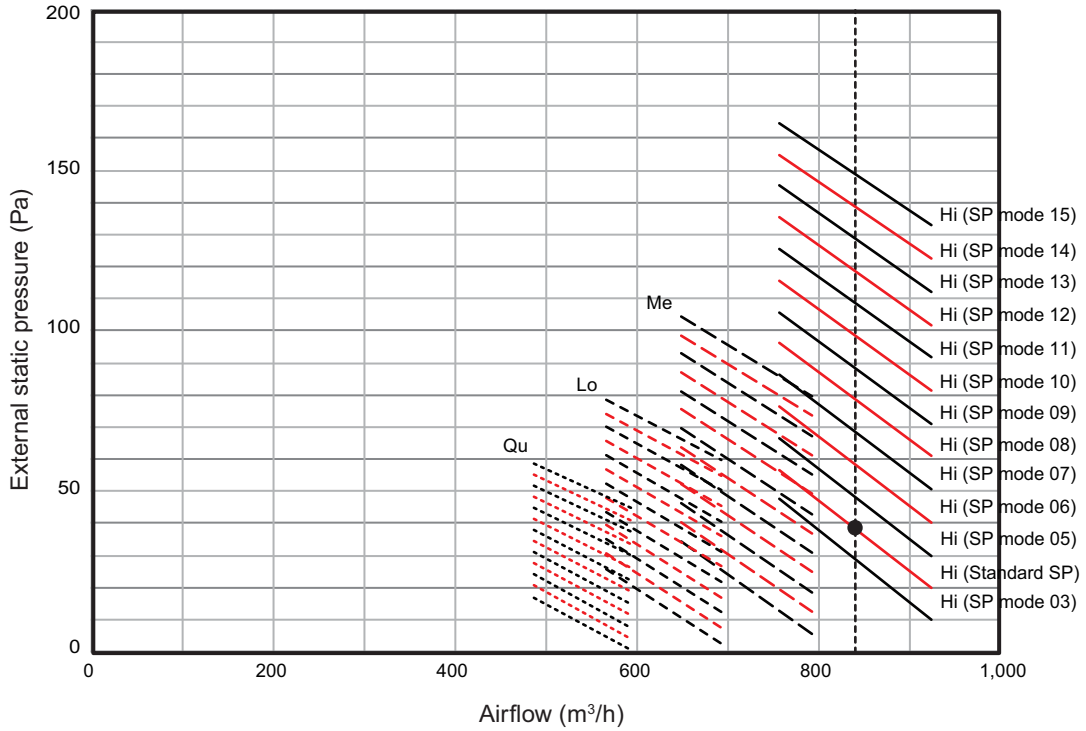

NOTES:

- Setting of the external static pressure is switchable into modes by using the remote controller.
- According to the resistance of the connecting duct, perform the setting of the external static pressure with referring “Fan performance curve 2” above.
- The default setting is set at “Standard SP”.

4-5 UNIT
MULTI-SPLIT TYPE

● Characteristics of air volume and capacity

- **Cooling**

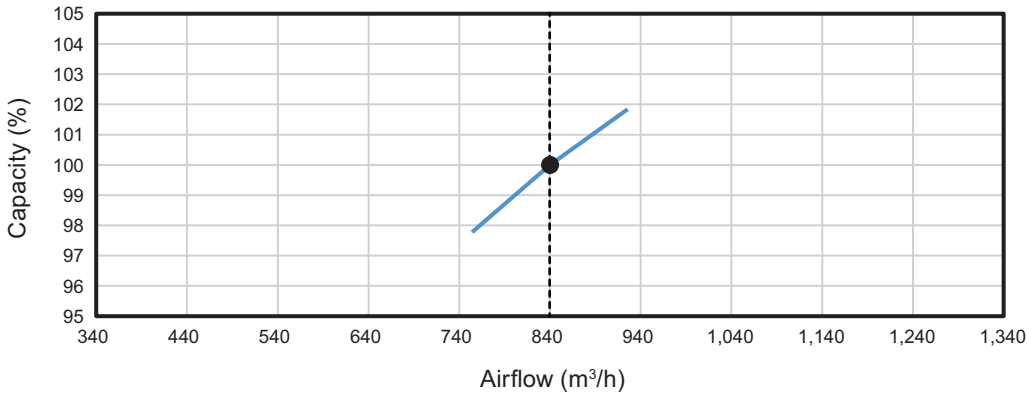

- **Heating**

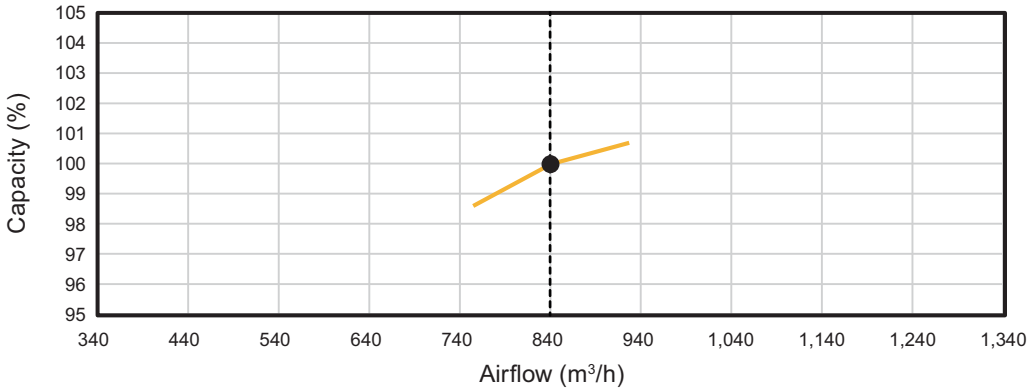

■ Model: ARXH22KMTAP

Fan performance curve 1

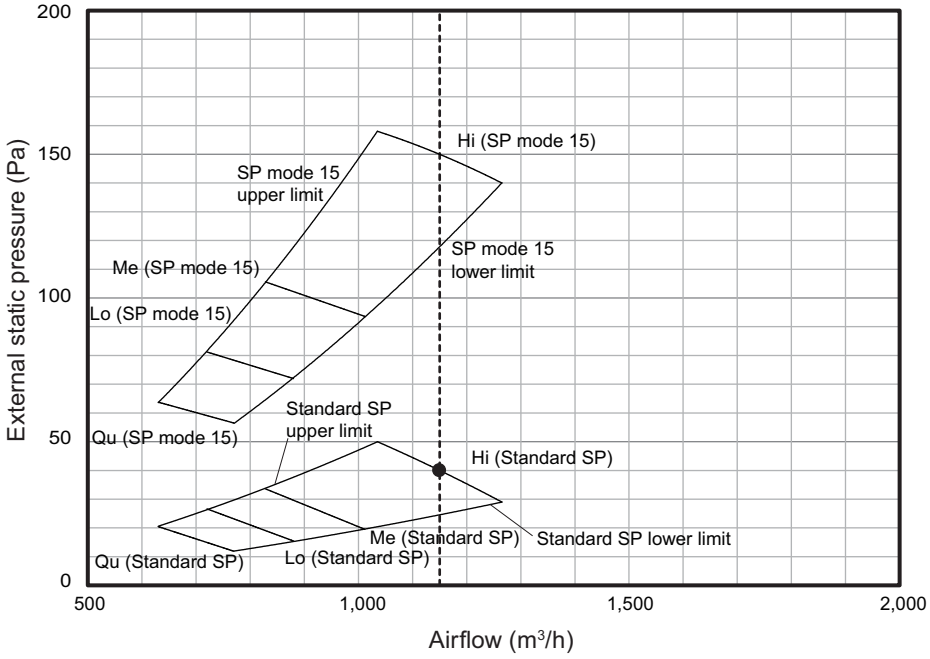

Fan performance curve 2
(For function setting by remote controller)

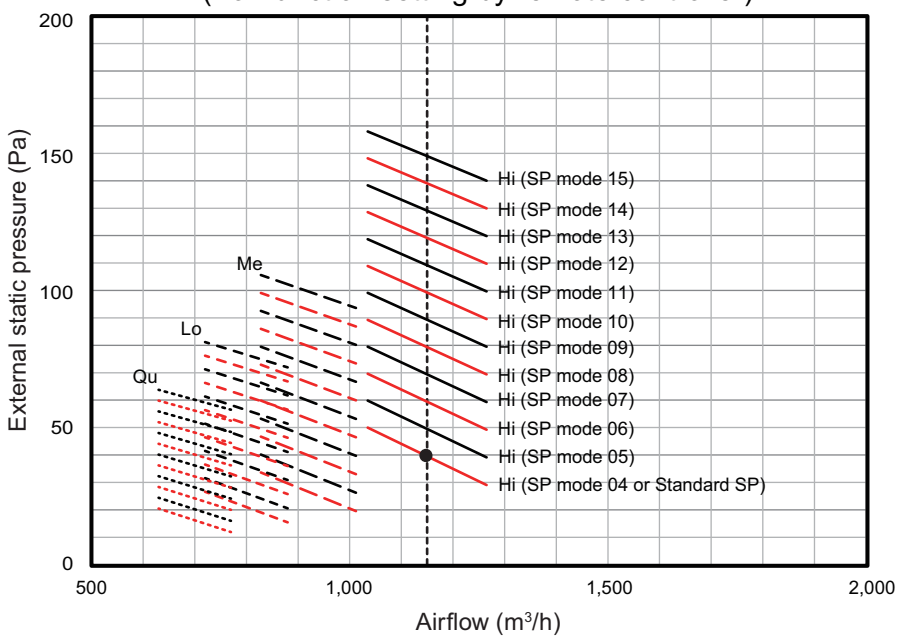

NOTES:

- Setting of the external static pressure is switchable into modes by using the remote controller.
- According to the resistance of the connecting duct, perform the setting of the external static pressure with referring “Fan performance curve 2” above.
- The default setting is set at “Standard SP”.

4-5 UNIT
MULTI-SPLIT TYPE

● Characteristics of air volume and capacity

- **Cooling**

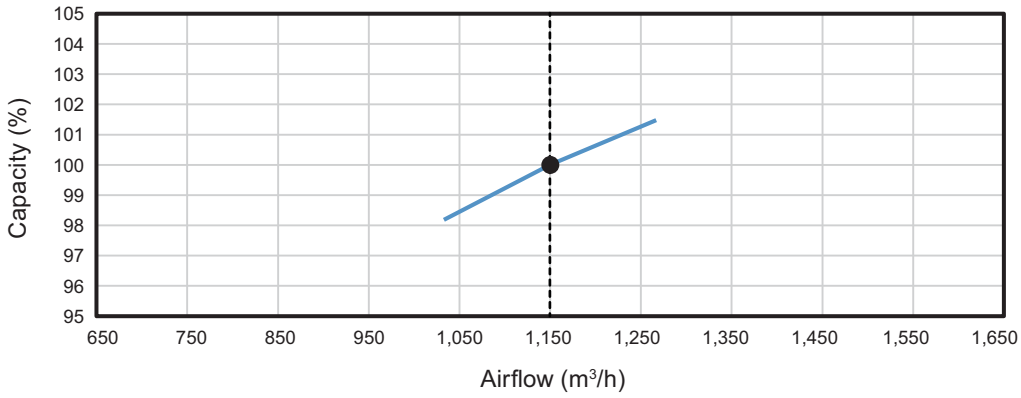

- **Heating**

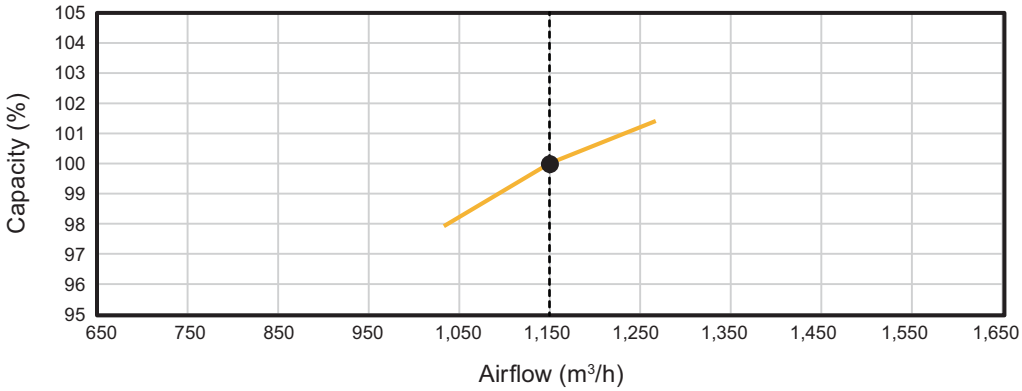

8. Airflow

Conversion factor:

- 1 m^3/h = 0.2778 l/s = 0.5886 CFM
- 3.6 m^3/h = 1 l/s
- 1.699 m^3/h = 1 CFM

8-1. Compact cassette type

Model	Operation mode	Fan speed	Airflow		
			m^3/h	l/s	CFM
AUXG07KVLA AUXG09KVLA	Cooling	High	540	150	318
		Med	490	136	288
		Low	440	122	259
		Quiet	390	108	230
	Heating	High	540	150	318
		Med	490	136	288
		Low	440	122	259
		Quiet	390	108	230
AUXG12KVLA	Cooling	High	610	169	359
		Med	530	147	312
		Low	470	131	277
		Quiet	410	114	241
	Heating	High	610	169	359
		Med	530	147	312
		Low	470	131	277
		Quiet	410	114	241
AUXG14KVLA	Cooling	High	680	189	400
		Med	580	161	341
		Low	490	136	288
		Quiet	410	114	241
	Heating	High	790	219	465
		Med	680	189	400
		Low	580	161	341
		Quiet	450	125	265
AUXG18KVLA	Cooling	High	680	189	400
		Med	580	161	341
		Low	490	136	288
		Quiet	410	114	241
	Heating	High	790	219	465
		Med	680	189	400
		Low	580	161	341
		Quiet	450	125	265
AUXG22KVLA	Cooling	High	830	231	489
		Med	740	206	436
		Low	600	167	353
		Quiet	450	125	265
	Heating	High	860	239	506
		Med	760	211	447
		Low	700	194	412
		Quiet	530	147	312

8-2. Mini duct type

Model	Operation mode	Fan speed	Airflow		
			m^3/h	l/s	CFM
ARXG07KSLAP	Cooling	High	550	153	324
		Med	440	122	259
		Low	390	108	230
		Quiet	360	100	212
	Heating	High	550	153	324
		Med	550	122	259
		Low	390	108	230
		Quiet	360	100	212
ARXG09KSLAP	Cooling	High	600	167	353
		Med	450	125	265
		Low	400	111	235
		Quiet	360	100	212
	Heating	High	600	167	353
		Med	450	125	265
		Low	400	111	235
		Quiet	360	100	212
ARXG12KSLAP	Cooling	High	650	181	383
		Med	490	136	288
		Low	430	119	253
		Quiet	360	100	212
	Heating	High	650	181	383
		Med	490	136	288
		Low	430	119	253
		Quiet	360	100	212
ARXG14KSLAP	Cooling	High	800	222	471
		Med	640	178	377
		Low	530	147	312
		Quiet	360	100	212
	Heating	High	800	222	471
		Med	640	178	377
		Low	530	147	312
		Quiet	360	100	212
ARXG18KSLAP	Cooling	High	940	261	553
		Med	750	208	441
		Low	540	150	318
		Quiet	480	133	283
	Heating	High	940	261	553
		Med	750	208	441
		Low	540	150	318
		Quiet	480	133	283

8-3. Slim duct type

Model	Operation mode	Fan speed	Airflow		
			m^3/h	l/s	CFM
ARXG07KLLAP	Cooling	High	550	153	324
		Med	490	136	288
		Low	470	131	277
		Quiet	440	122	259
	Heating	High	550	153	324
		Med	490	136	288
		Low	470	131	277
		Quiet	440	122	259
ARXG09KLLAP	Cooling	High	600	167	353
		Med	550	153	324
		Low	500	139	294
		Quiet	450	125	265
	Heating	High	600	167	353
		Med	550	153	324
		Low	500	139	294
		Quiet	450	125	265
ARXG12KLLAP	Cooling	High	650	181	383
		Med	600	167	353
		Low	550	153	324
		Quiet	480	133	283
	Heating	High	650	181	383
		Med	600	167	353
		Low	550	153	324
		Quiet	480	133	283
ARXG14KLLAP	Cooling	High	800	222	471
		Med	700	194	412
		Low	600	167	353
		Quiet	480	133	283
	Heating	High	800	222	471
		Med	700	194	412
		Low	600	167	353
		Quiet	480	133	283
ARXG18KLLAP	Cooling	High	940	261	553
		Med	880	244	518
		Low	820	228	483
		Quiet	750	208	441
	Heating	High	940	261	553
		Med	880	244	518
		Low	820	228	483
		Quiet	750	208	441

8-4. Medium static pressure duct type

Model	Operation mode	Fan speed	Airflow		
			m^3/h	l/s	CFM
ARXG22KMLB	Cooling	High	1,100	306	647
		Med	910	253	536
		Low	750	208	441
		Quiet	580	161	341
	Heating	High	1,100	306	647
		Med	910	253	536
		Low	750	208	441
		Quiet	580	161	341
ARXH12KMTAP	Cooling	High	650	181	383
		Med	520	144	306
		Low	460	128	271
		Quiet	390	108	230
	Heating	High	650	181	383
		Med	520	144	306
		Low	460	128	271
		Quiet	390	108	230
ARXH14KMTAP	Cooling	High	800	222	471
		Med	640	178	377
		Low	560	156	330
		Quiet	480	133	283
	Heating	High	800	222	471
		Med	640	178	377
		Low	560	156	330
		Quiet	480	133	283
ARXH18KMTAP	Cooling	High	840	233	494
		Med	720	200	424
		Low	630	175	371
		Quiet	540	150	318
	Heating	High	840	233	494
		Med	720	200	424
		Low	630	175	371
		Quiet	540	150	318
ARXH22KMTAP	Cooling	High	1,150	319	677
		Med	920	256	542
		Low	800	222	471
		Quiet	700	194	412
	Heating	High	1,150	319	677
		Med	920	256	542
		Low	800	222	471
		Quiet	700	194	412

8-5. Wall mounted type

Model	Operation mode	Fan speed	Airflow		
			m^3/h	l/s	CFM
ASEH07KMCG ASEH07KMCG-B	Cooling	High	650	181	383
		Med	540	150	318
		Low	430	119	253
		Quiet	320	89	188
	Heating	High	720	200	424
		Med	580	161	341
		Low	460	128	271
		Quiet	330	92	194
ASEH09KMCG ASEH09KMCG-B	Cooling	High	700	194	412
		Med	560	156	330
		Low	430	119	253
		Quiet	320	89	188
	Heating	High	750	208	441
		Med	610	169	359
		Low	470	131	277
		Quiet	330	92	194
ASEH12KMCG ASEH12KMCG-B	Cooling	High	700	194	412
		Med	560	156	330
		Low	430	119	253
		Quiet	320	89	188
	Heating	High	780	217	459
		Med	640	178	377
		Low	520	144	306
		Quiet	330	92	194
ASEH14KMCG ASEH14KMCG-B	Cooling	High	770	214	453
		Med	600	167	353
		Low	450	125	265
		Quiet	310	86	182
	Heating	High	820	228	483
		Med	660	183	388
		Low	520	144	306
		Quiet	340	94	200
ASEG07KETF ASEG07KETF-B	Cooling	High	650	181	383
		Med	540	150	318
		Low	430	119	253
		Quiet	270	75	159
	Heating	High	720	200	424
		Med	580	161	341
		Low	460	128	271
		Quiet	330	92	194
ASEG09KETF ASEG09KETF-B	Cooling	High	700	194	412
		Med	560	156	330
		Low	430	119	253
		Quiet	270	75	159
	Heating	High	750	208	441
		Med	610	169	359
		Low	470	131	277
		Quiet	330	92	194

Model	Operation mode	Fan speed	Airflow		
			m^3/h	l/s	CFM
ASEG12KETF ASEG12KETF-B	Cooling	High	700	194	412
		Med	560	156	330
		Low	430	119	253
		Quiet	270	75	159
	Heating	High	770	214	453
		Med	640	178	377
		Low	520	144	306
		Quiet	330	92	194
ASEG14KETF ASEG14KETF-B	Cooling	High	770	214	453
		Med	600	167	353
		Low	450	125	265
		Quiet	280	78	165
	Heating	High	800	222	471
		Med	660	183	388
		Low	520	144	306
		Quiet	340	94	200
ASEH07KGTG	Cooling	High	650	181	383
		Med	540	150	318
		Low	430	119	253
		Quiet	270	75	159
	Heating	High	720	200	424
		Med	580	161	341
		Low	460	128	271
		Quiet	330	92	194
ASEH09KGTG	Cooling	High	700	194	412
		Med	560	156	330
		Low	430	119	253
		Quiet	270	75	159
	Heating	High	750	208	441
		Med	610	169	359
		Low	470	131	277
		Quiet	330	92	194
ASEH12KGTG	Cooling	High	700	194	412
		Med	560	156	330
		Low	430	119	253
		Quiet	270	75	159
	Heating	High	770	214	453
		Med	640	178	377
		Low	520	144	306
		Quiet	330	92	194
ASEH14KGTG	Cooling	High	770	214	453
		Med	600	167	353
		Low	450	125	265
		Quiet	280	78	165
	Heating	High	800	222	471
		Med	660	183	388
		Low	520	144	306
		Quiet	340	94	200

Model	Operation mode	Fan speed	Airflow		
			m^3/h	l/s	CFM
ASEH05KNCA	Cooling	High	500	139	294
		Med	450	125	265
		Low	390	108	230
		Quiet	250	69	147
	Heating	High	500	139	294
		Med	450	125	265
		Low	420	117	247
		Quiet	280	78	165
ASEH07KNCA	Cooling	High	530	147	312
		Med	460	128	271
		Low	390	108	230
		Quiet	250	69	147
	Heating	High	530	147	312
		Med	460	128	271
		Low	420	117	247
		Quiet	280	78	165
ASEH09KNCA	Cooling	High	640	178	377
		Med	500	139	294
		Low	390	108	230
		Quiet	250	69	147
	Heating	High	640	178	377
		Med	500	139	294
		Low	420	117	247
		Quiet	280	78	165
ASEH12KNCA	Cooling	High	660	183	388
		Med	520	144	306
		Low	440	122	259
		Quiet	250	69	147
	Heating	High	660	183	388
		Med	520	144	306
		Low	440	122	259
		Quiet	280	78	165
ASEG18KMTE	Cooling	High	980	272	577
		Med	810	225	477
		Low	640	178	377
		Quiet	510	142	300
	Heating	High	1,020	283	600
		Med	850	236	500
		Low	640	178	377
		Quiet	510	142	300
ASEG22KMTE	Cooling	High	1,060	294	624
		Med	810	225	477
		Low	640	178	377
		Quiet	510	142	300
	Heating	High	1,060	294	624
		Med	850	236	500
		Low	640	178	377
		Quiet	510	142	300

Model	Operation mode	Fan speed	Airflow		
			m^3/h	l/s	CFM
ASEG24KMTE	Cooling	High	1,170	325	689
		Med	850	236	500
		Low	640	178	377
		Quiet	510	142	300
	Heating	High	1,170	325	689
		Med	850	236	500
		Low	640	178	377
		Quiet	510	142	300

4-5 UNIT
MULTI-SPLIT TYPE

8-6. Ceiling type

Model	Operation mode	Fan speed	Airflow		
			m^3/h	l/s	CFM
ABEG18KRTA	Cooling	High	840	233	494
		Med	790	219	465
		Low	710	197	418
		Quiet	650	181	383
	Heating	High	840	233	494
		Med	790	219	465
		Low	710	197	418
		Quiet	650	181	383
ABEG22KRTA	Cooling	High	900	250	530
		Med	790	219	465
		Low	710	197	418
		Quiet	650	181	383
	Heating	High	900	250	530
		Med	790	219	465
		Low	710	197	418
		Quiet	650	181	383

8-7. Floor type

Model	Operation mode	Fan speed	Airflow		
			m^3/h	l/s	CFM
AGEG09KVCA	Cooling	High	530	147	312
		Med	440	111	235
		Low	360	100	212
		Quiet	270	75	159
	Heating	High	530	147	312
		Med	460	128	271
		Low	380	106	224
		Quiet	270	75	159
AGEG12KVCA	Cooling	High	600	167	353
		Med	490	136	288
		Low	380	106	224
		Quiet	270	75	159
	Heating	High	600	167	353
		Med	510	142	300
		Low	410	114	241
		Quiet	270	75	159
AGEG14KVCA	Cooling	High	650	181	383
		Med	520	144	306
		Low	400	131	277
		Quiet	270	75	159
	Heating	High	650	181	383
		Med	540	150	318
		Low	430	119	253
		Quiet	270	75	159

9. Noise level curve

9-1. Compact cassette type

■ Model: AUXG07KVLA

● Cooling

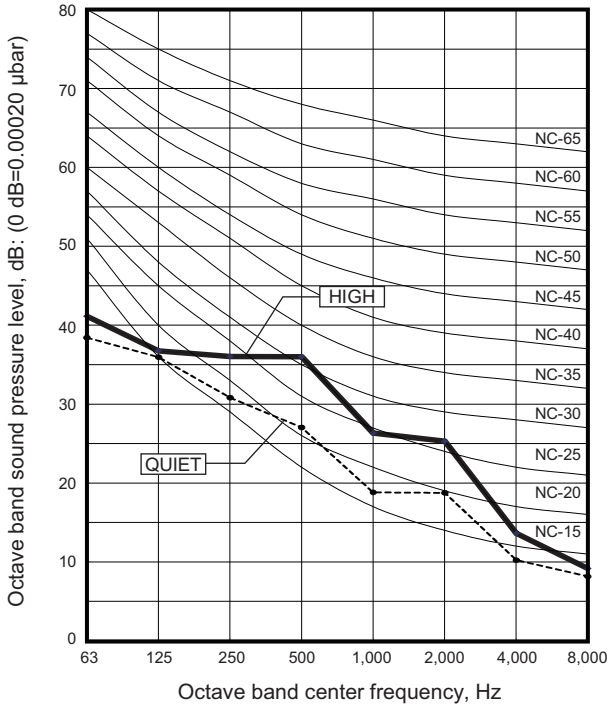

● Heating

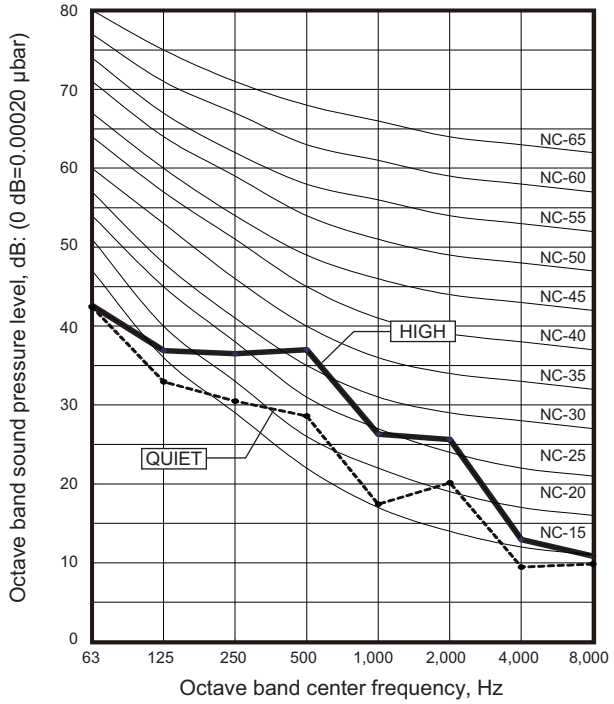

■ Model: AUXG09KVLA

● Cooling

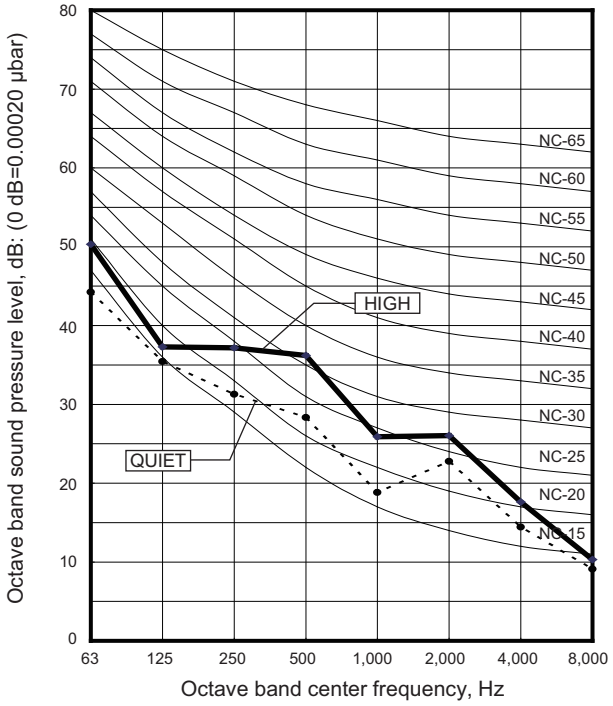

● Heating

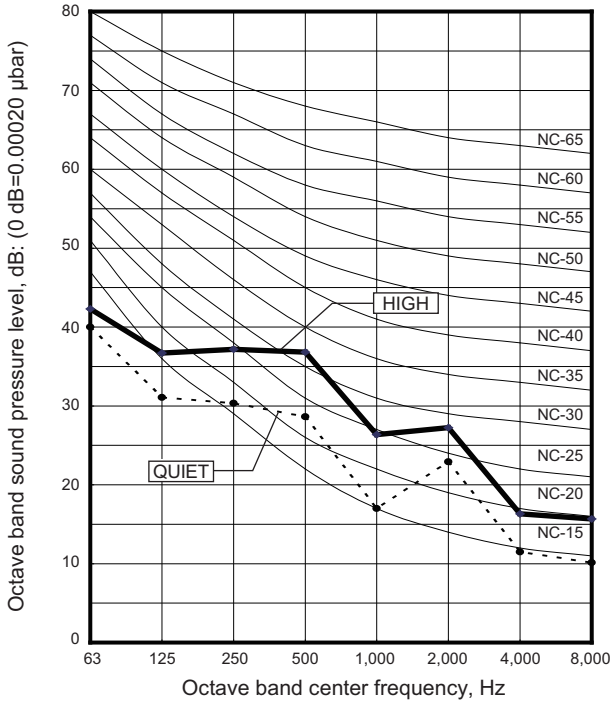

■ Model: AUXG12KVLA

● Cooling

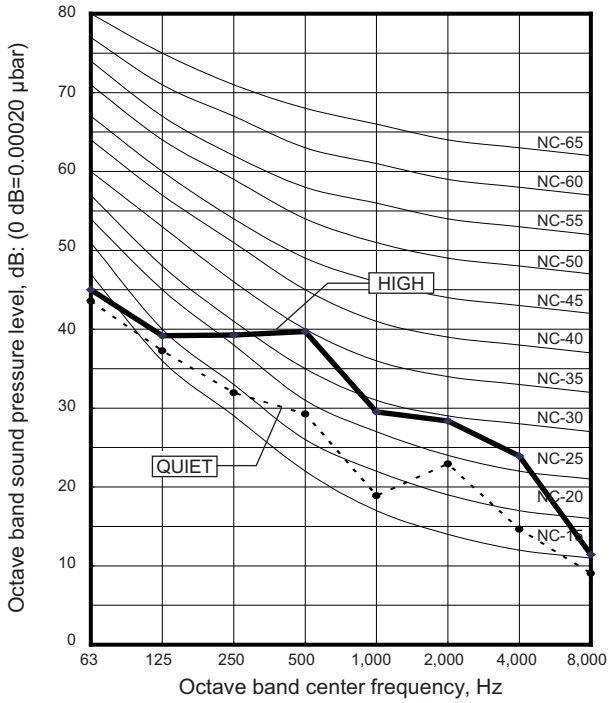

● Heating

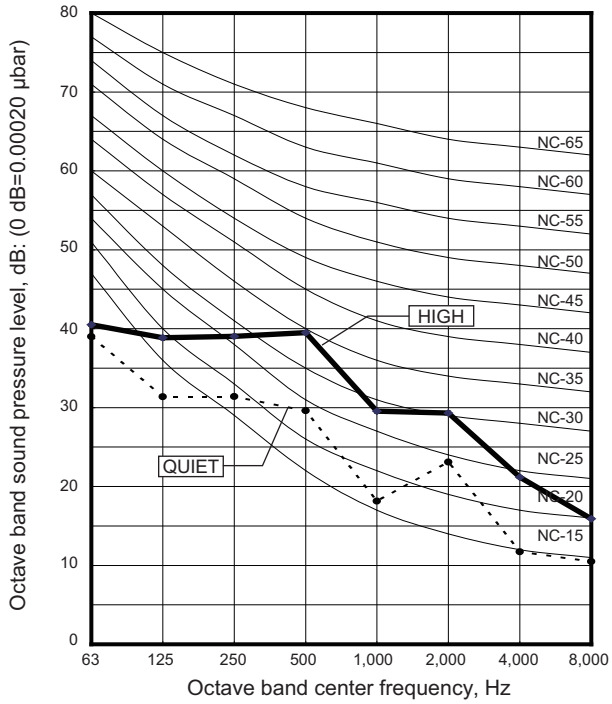

■ Model: AUXG14KVLA

● Cooling

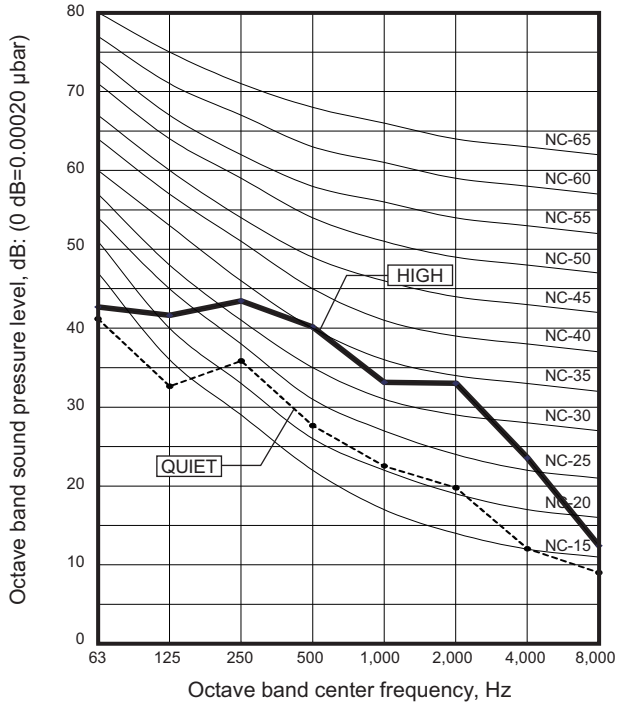

● Heating

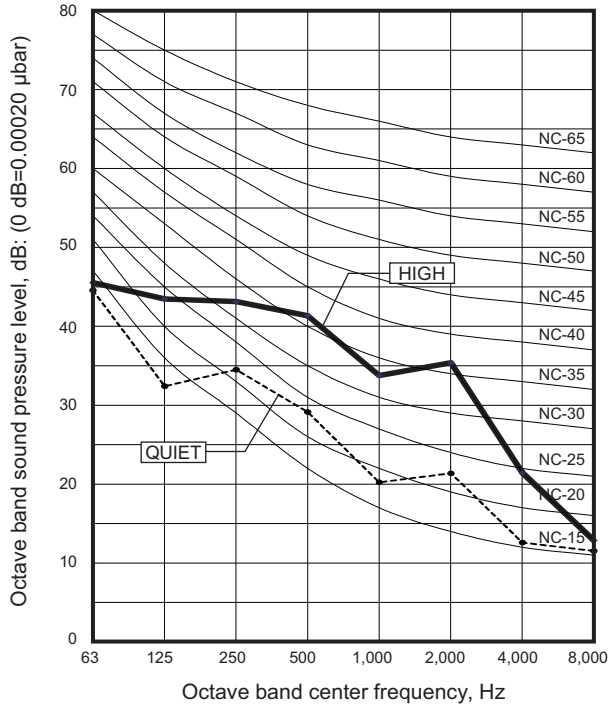

■ Model: AUXG18KVLA

● Cooling

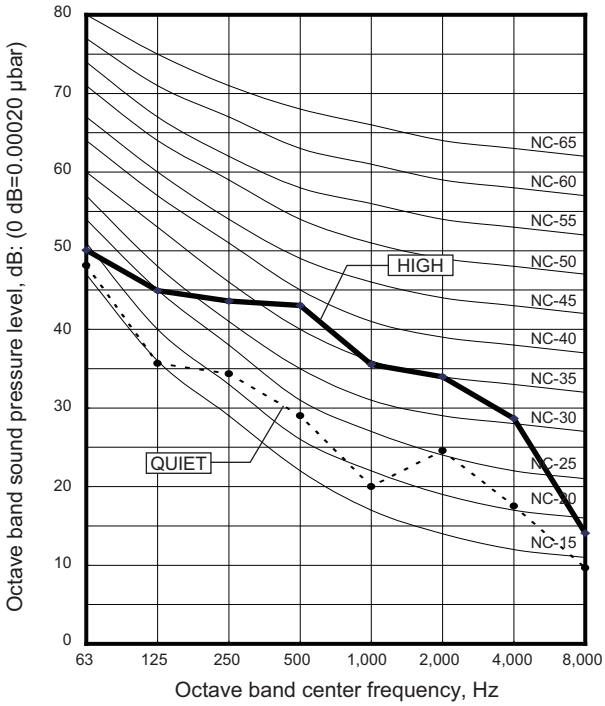

● Heating

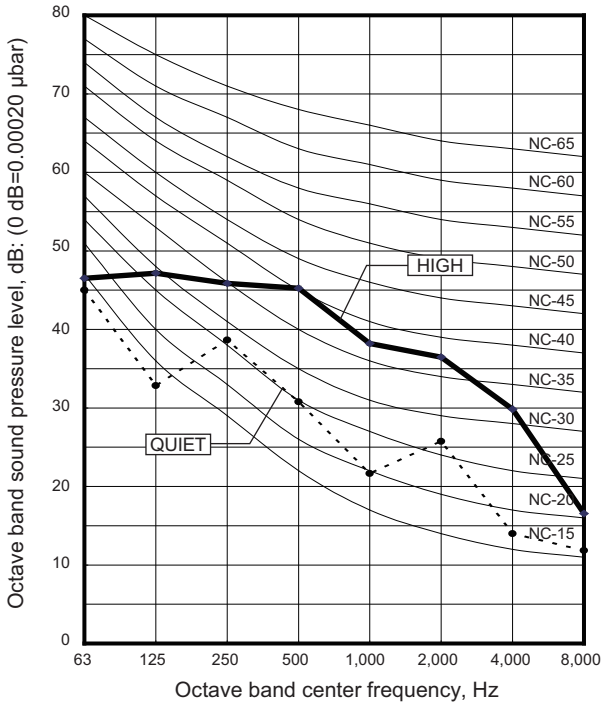

■ Model: AUXG22KVLA

● Cooling

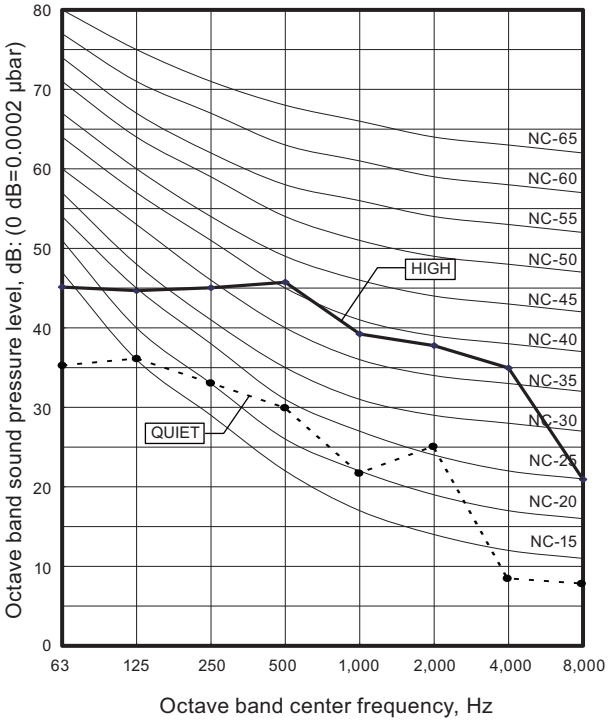

● Heating

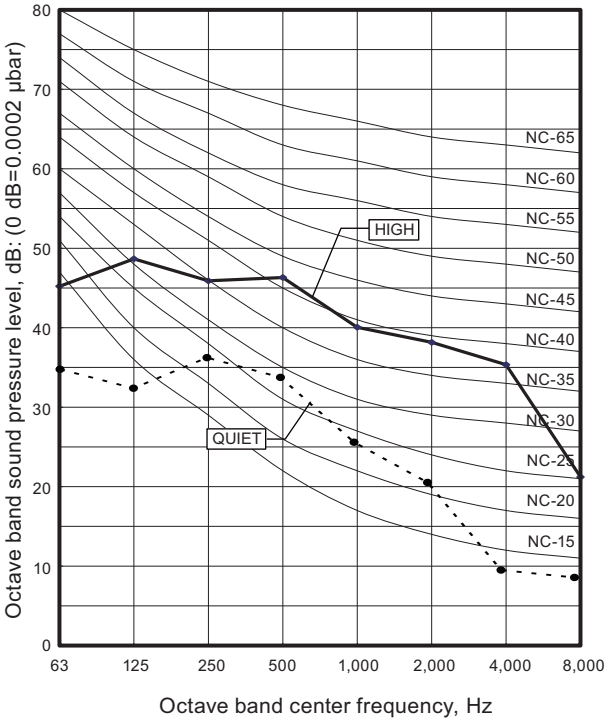

9-2. Mini duct type

■ Model: ARXG07KSLAP

● Cooling

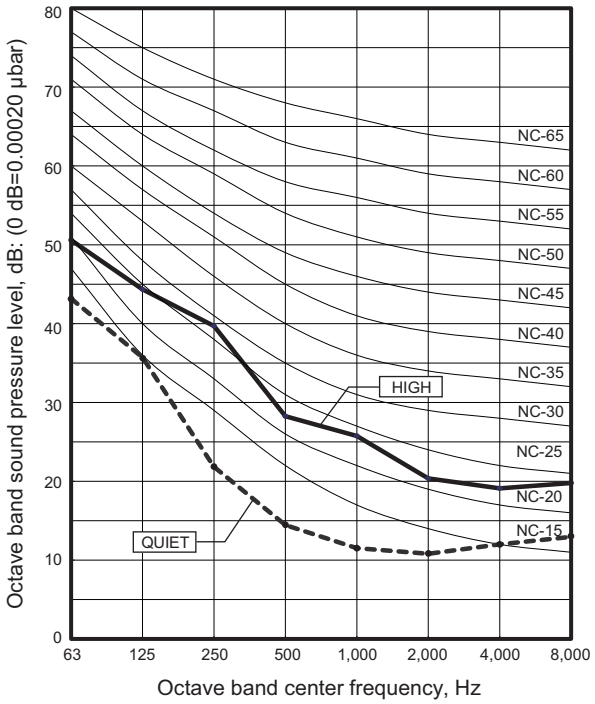

● Heating

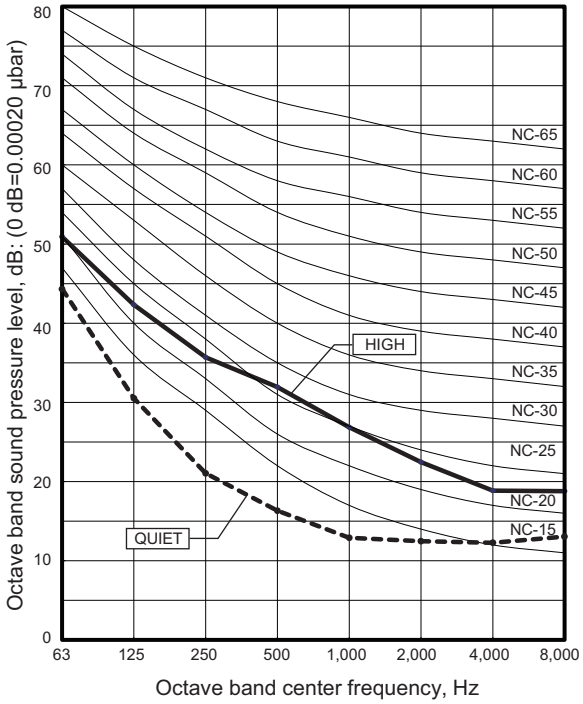

■ Model: ARXG09KSLAP

● Cooling

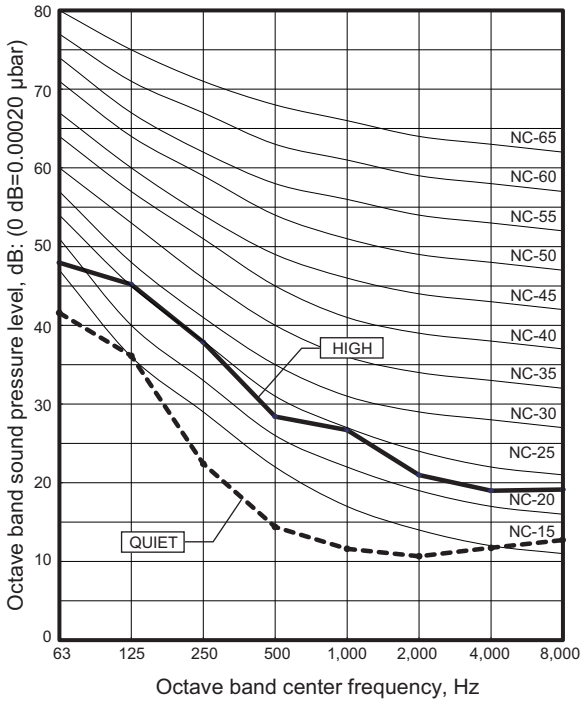

● Heating

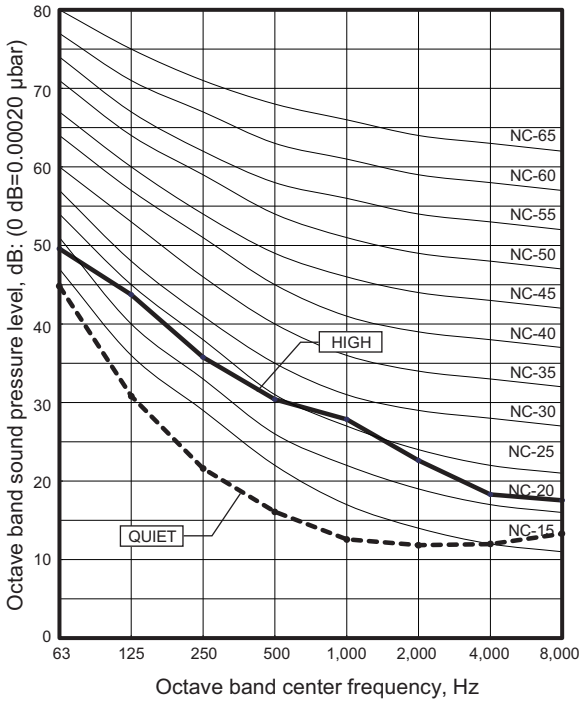

■ Model: ARXG12KSLAP

● Cooling

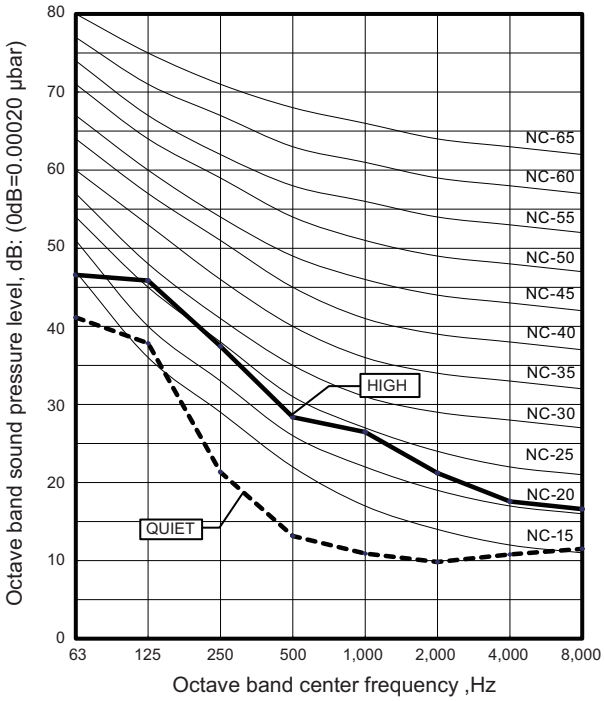

● Heating

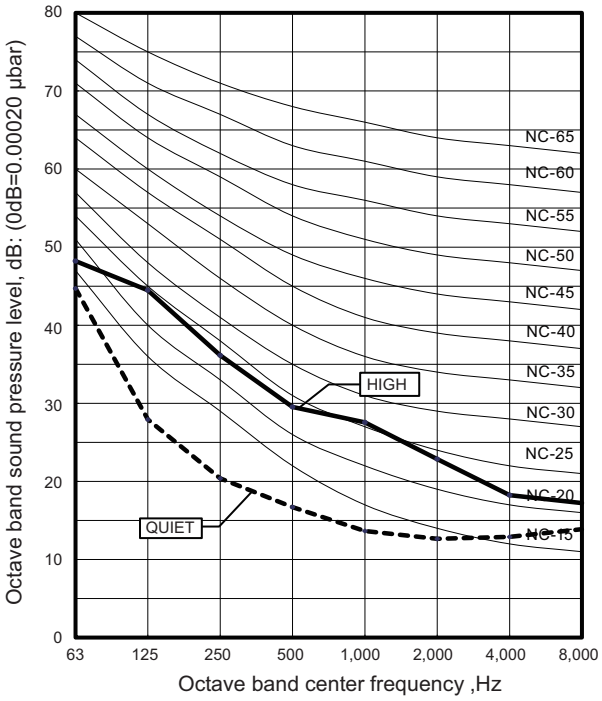

■ Model: ARXG14KSLAP

● Cooling

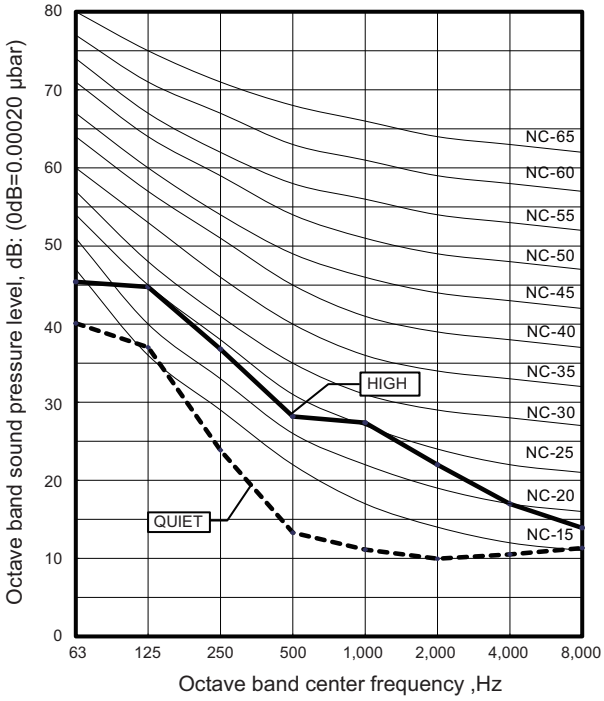

● Heating

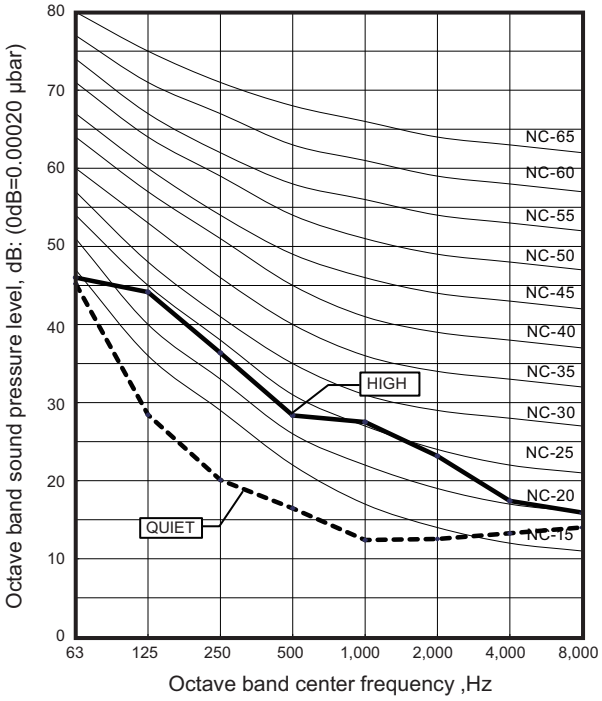

■ Model: ARXG18KSLAP

● Cooling

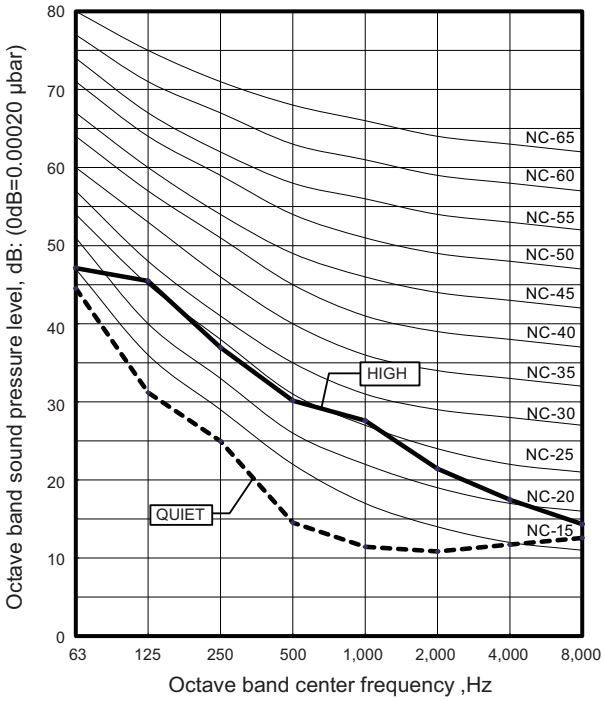

● Heating

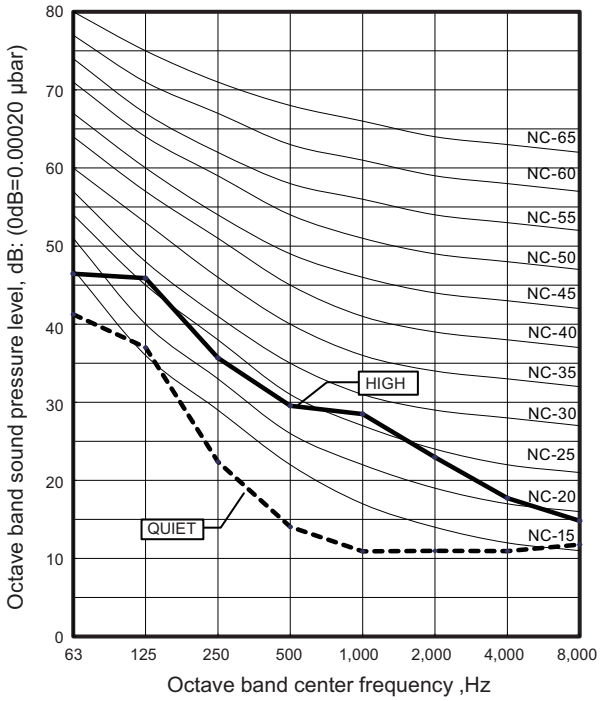

9-3. Slim duct type

■ Model: ARXG07KLLAP

● Cooling

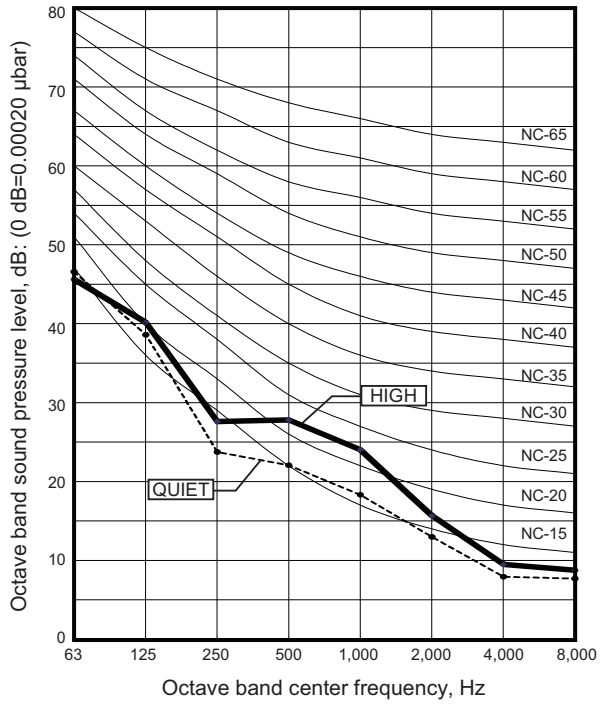

● Heating

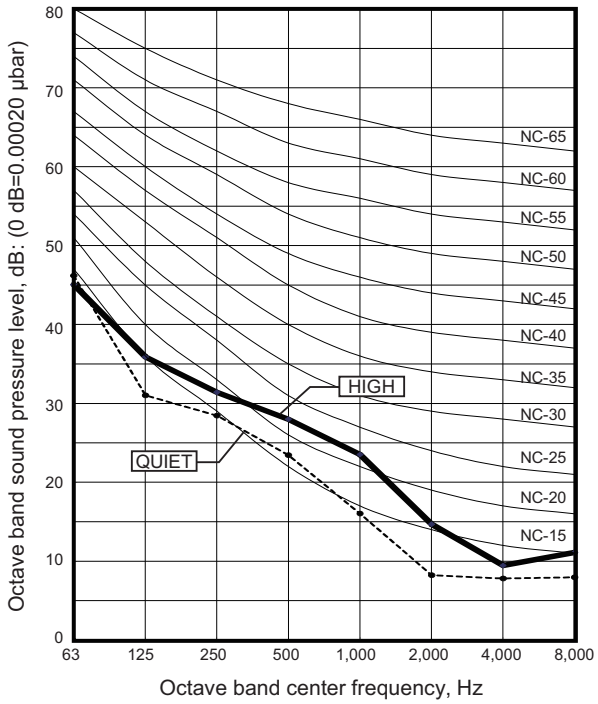

■ Model: ARXG09KLLAP

● Cooling

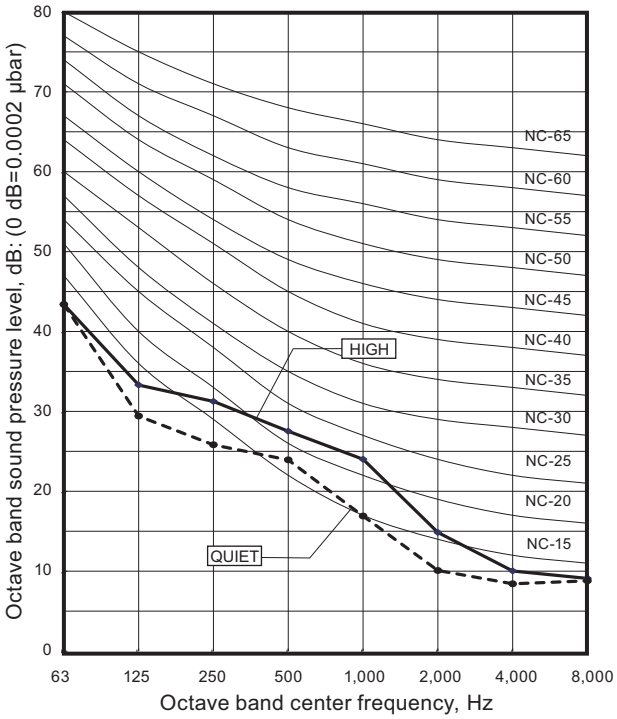

● Heating

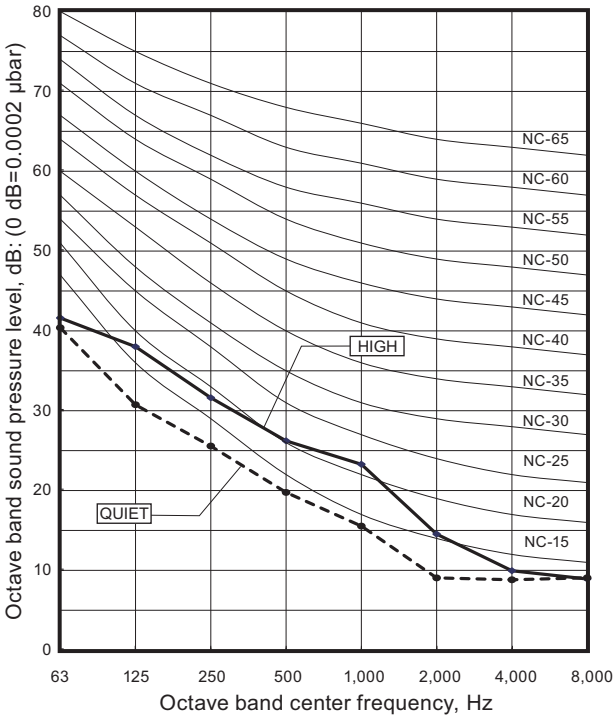

■ Model: ARXG12KLLAP

● Cooling

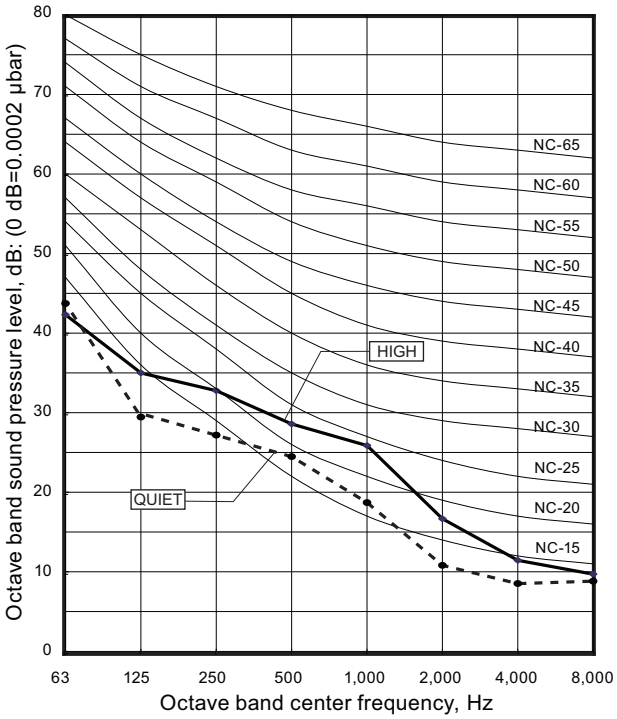

● Heating

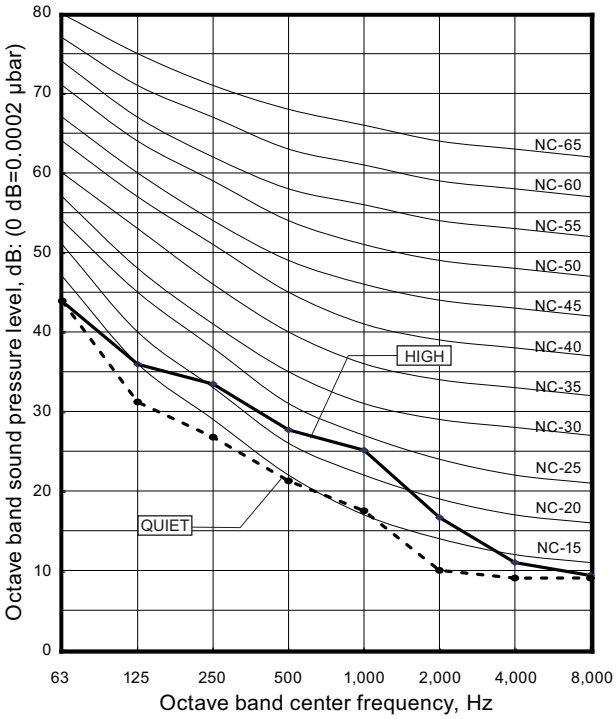

■ Model: ARXG14KLLAP

● Cooling

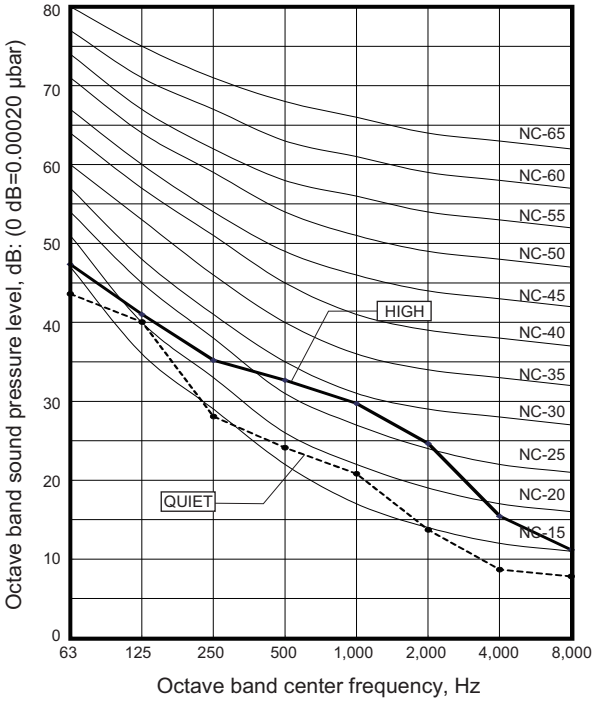

● Heating

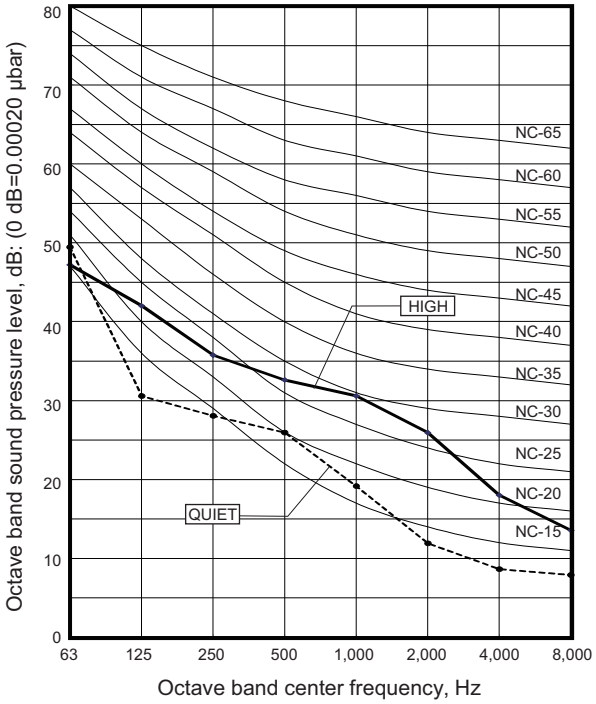

■ Model: ARXG18KLLAP

● Cooling

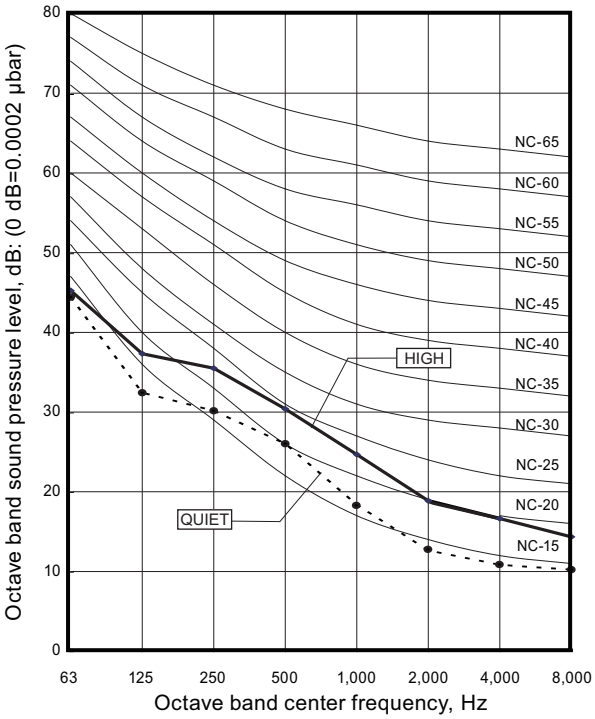

● Heating

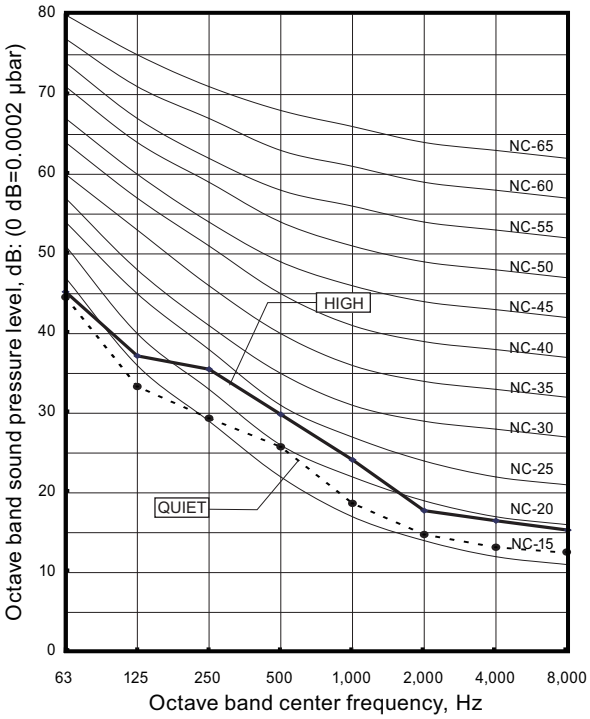

9-4. Medium static pressure duct type

■ Model: ARXG22KMLB

● Cooling

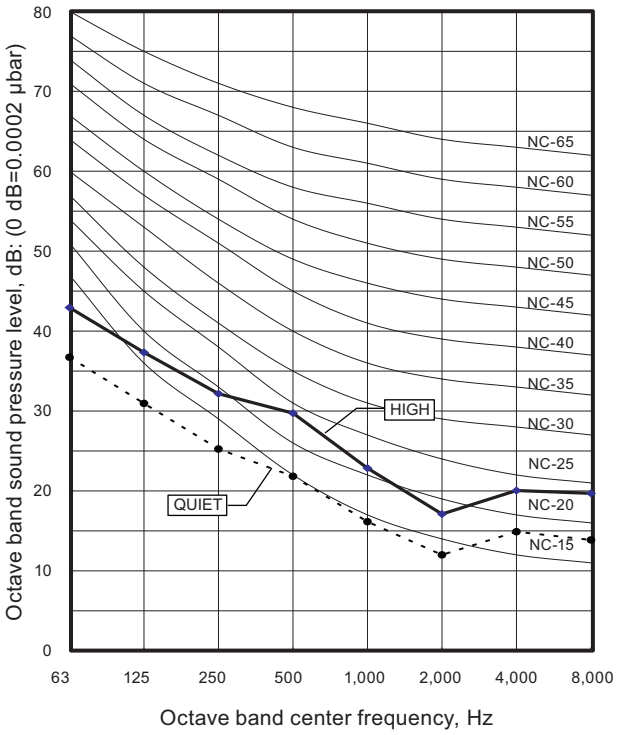

● Heating

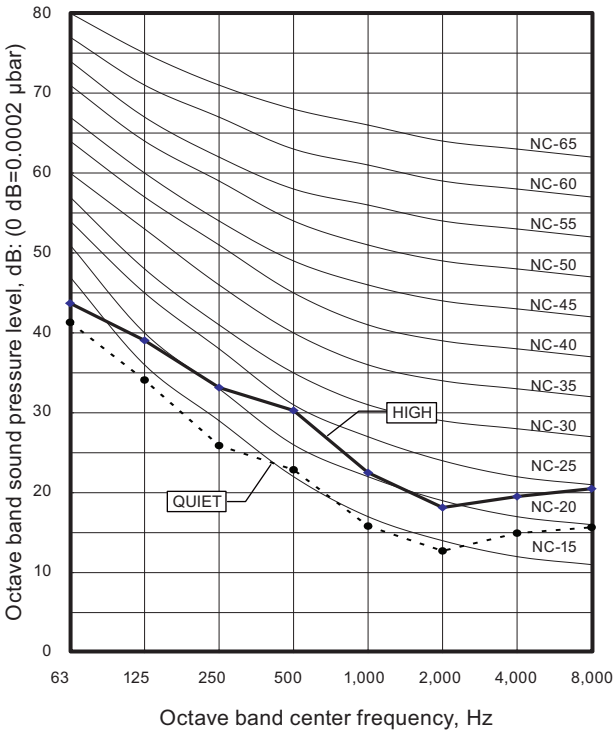

■ Model: ARXH12KMTAP

● Cooling

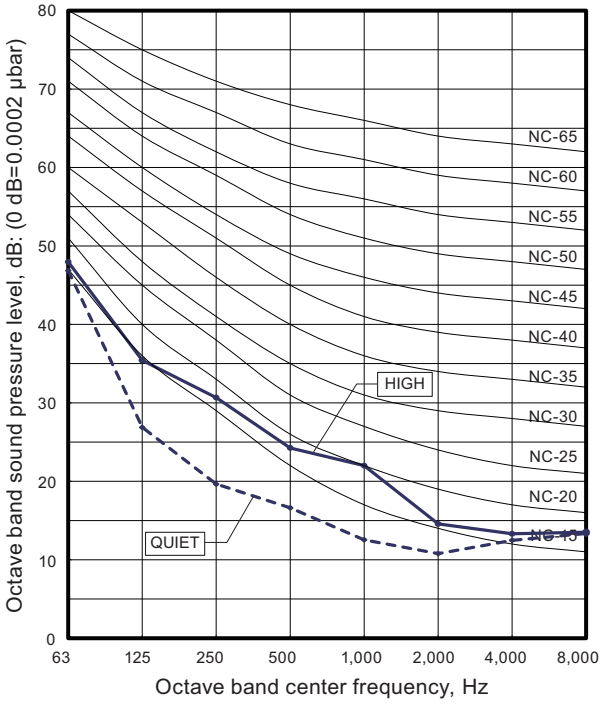

● Heating

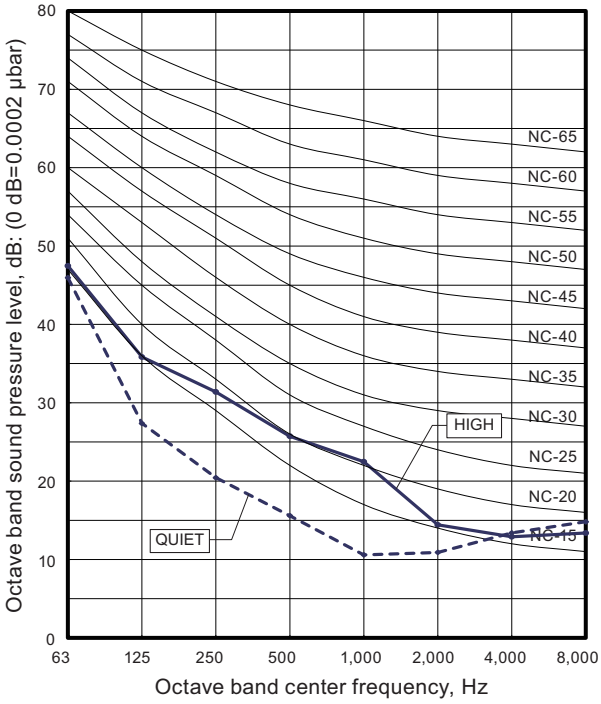

■ Model: ARXH14KMTAP

● Cooling

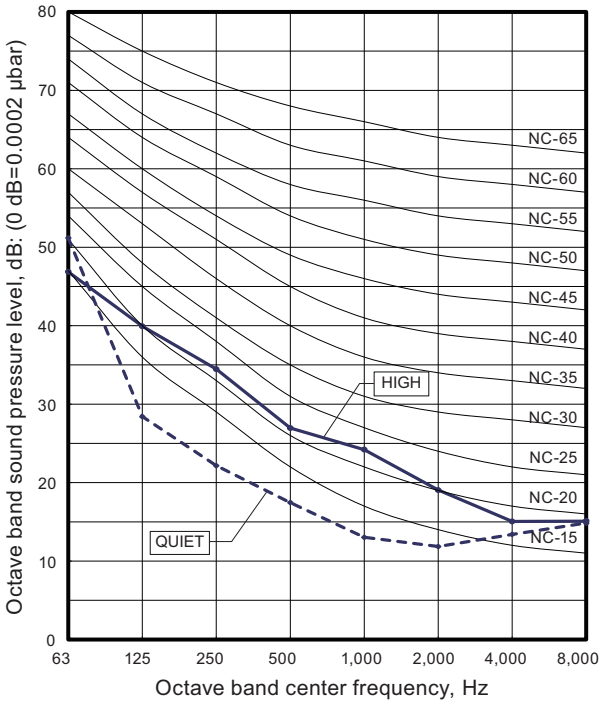

● Heating

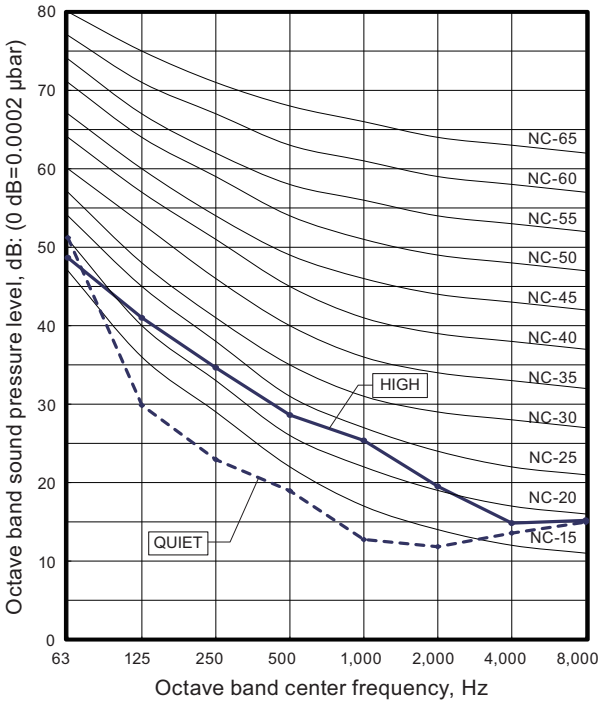

■ Model: ARXH18KMTAP

● Cooling

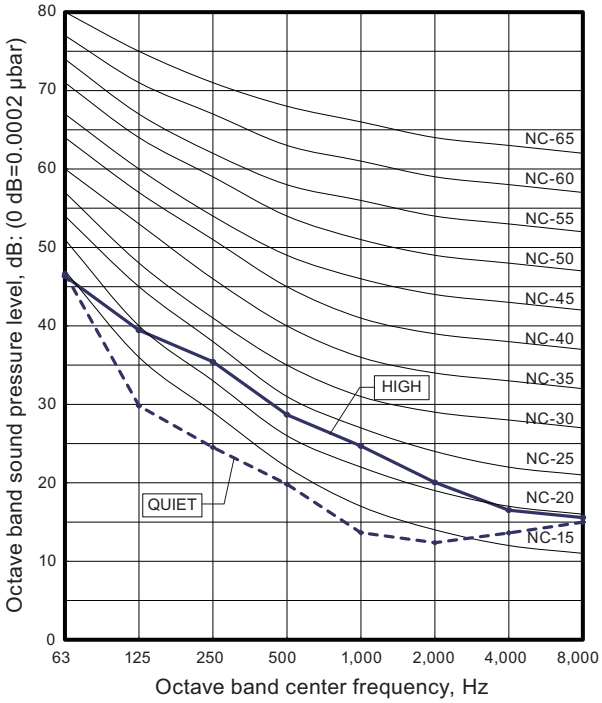

● Heating

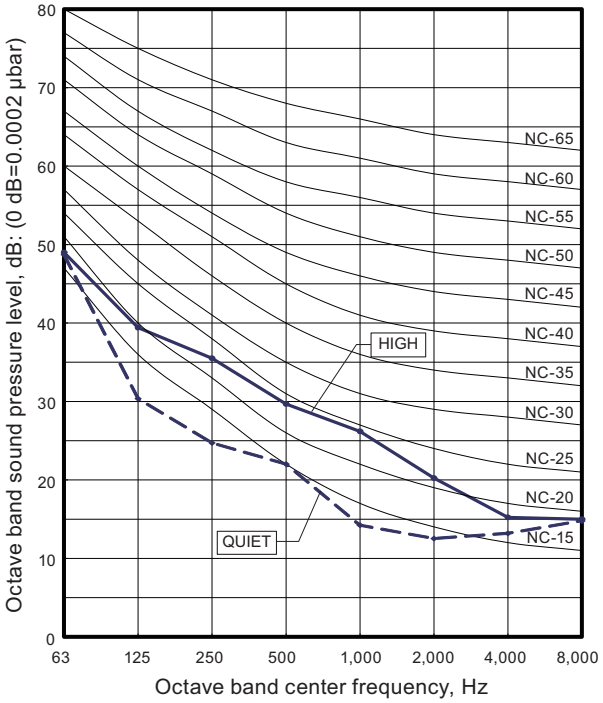

■ Model: ARXH22KMTAP

● Cooling

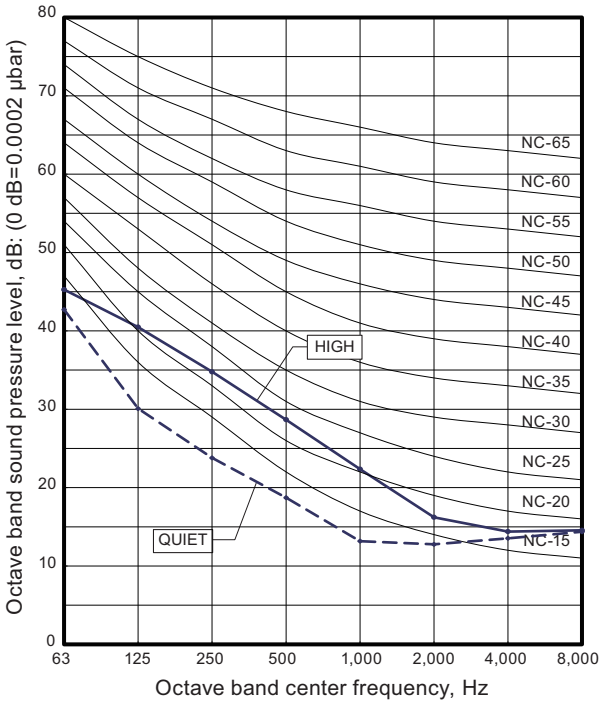

● Heating

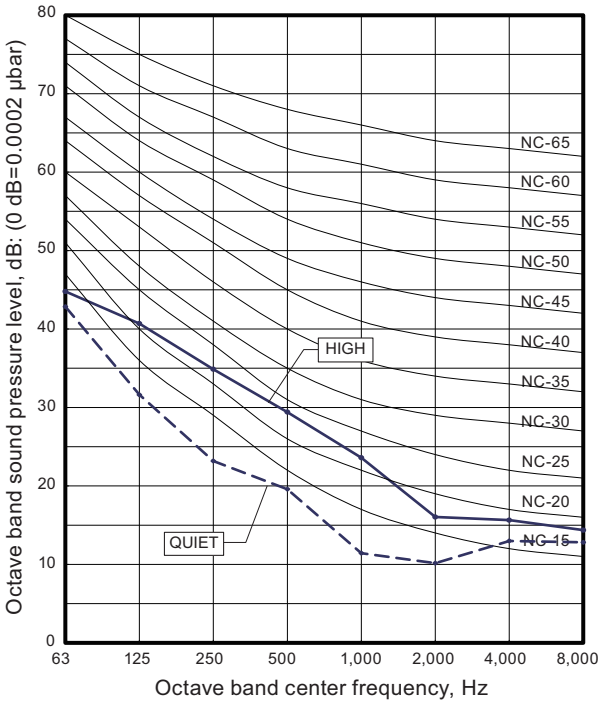

9-5. Wall mounted type

■ Models: ASEH07KMCG, ASEH07KMCG-B, ASEG07KETF, and ASEG07KETF-B

● Cooling

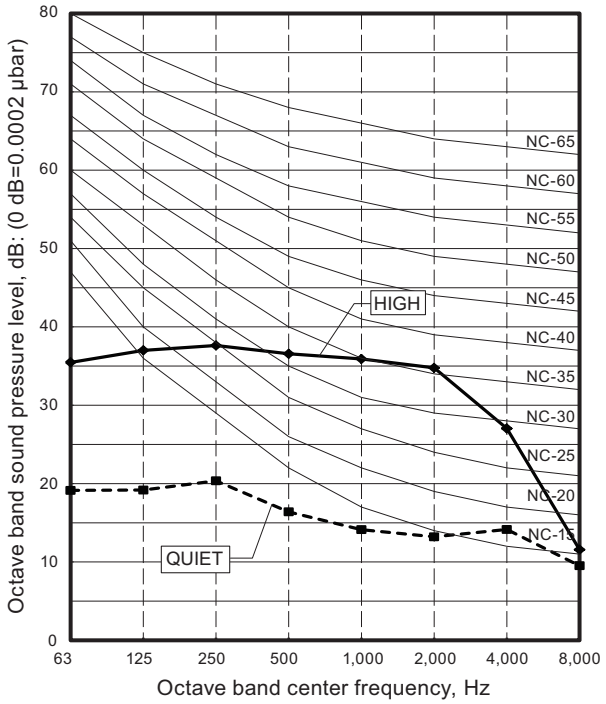

● Heating

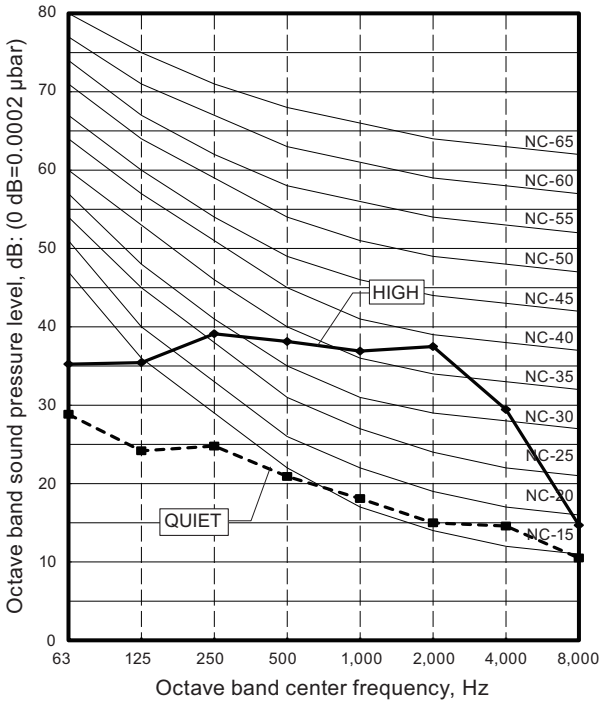

■ Models: ASEH09KMCG, ASEH09KMCG-B, ASEG09KETF, and ASEG09KETF-B

● Cooling

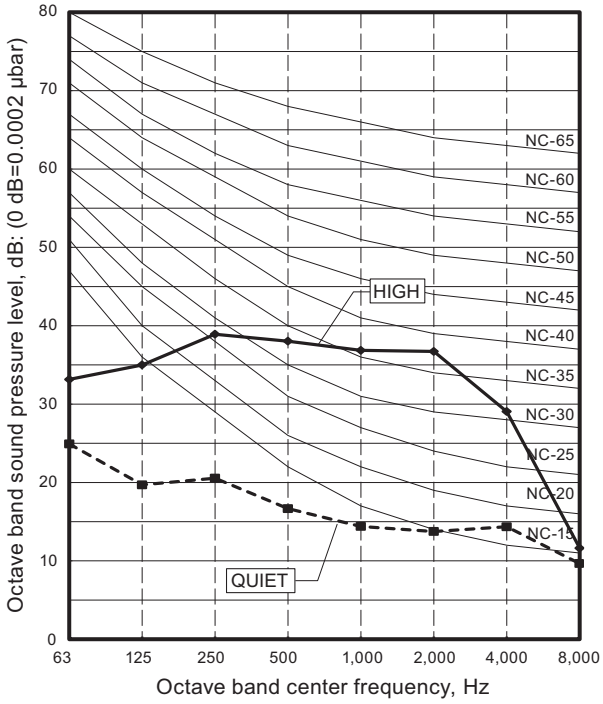

● Heating

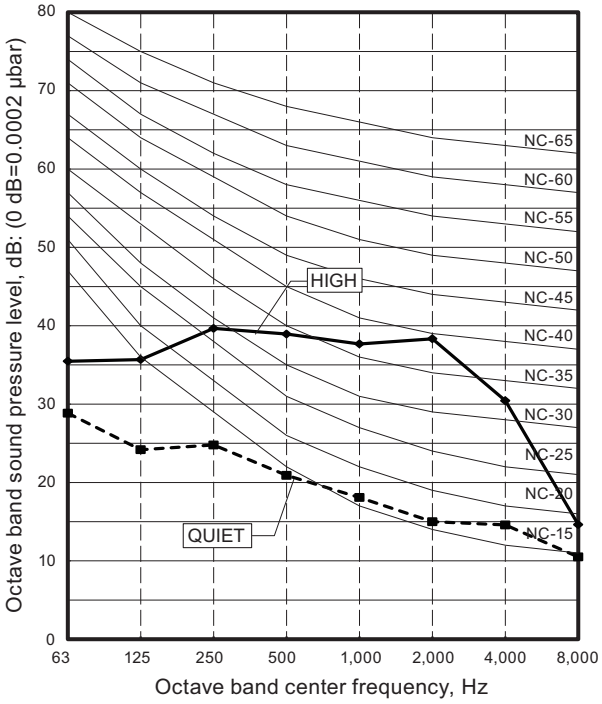

■ Models: ASEH12KMCG, ASEH12KMCG-B, ASEG12KETF, and ASEG12KETF-B

● Cooling

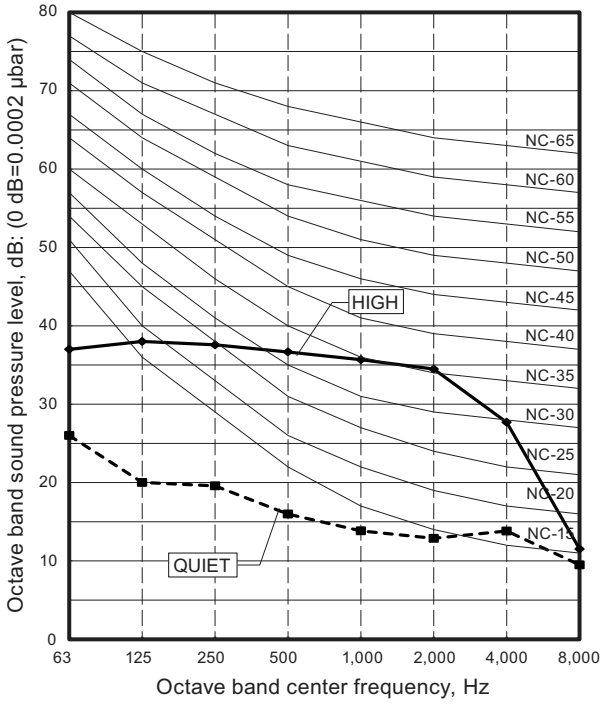

● Heating

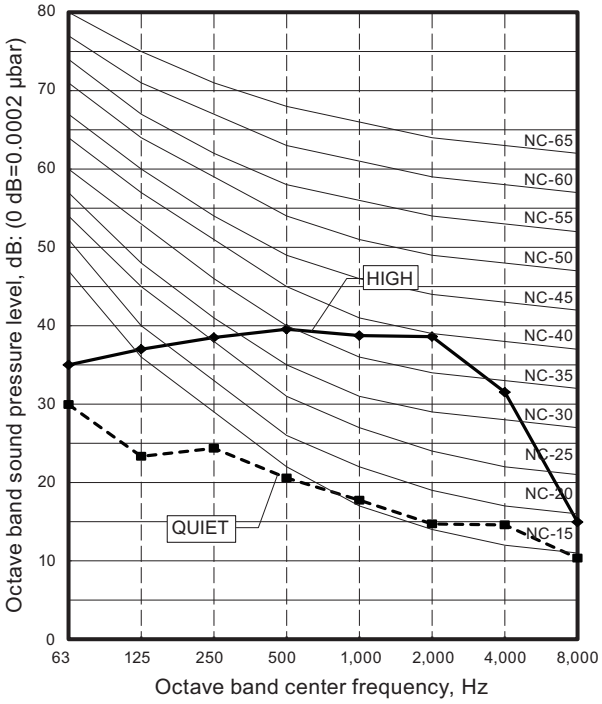

■ Models: ASEH14KMCG, ASEH14KMCG-B, ASEG14KETF, and ASEG14KETF-B

● Cooling

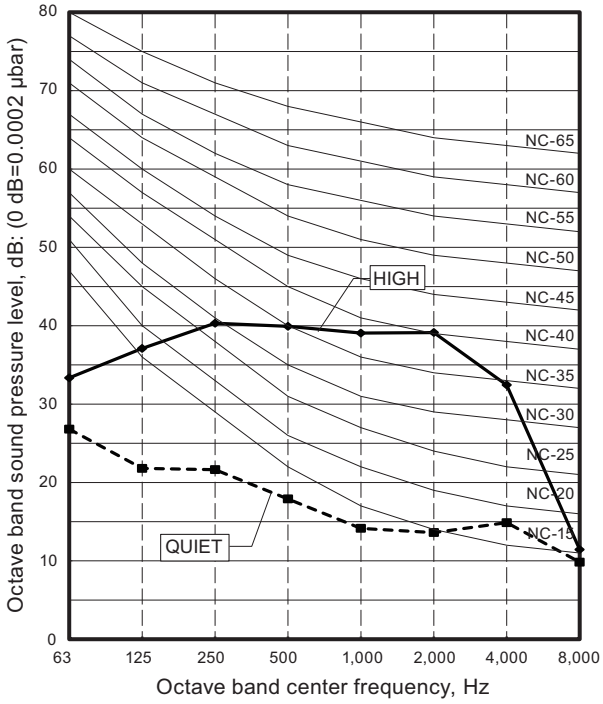

● Heating

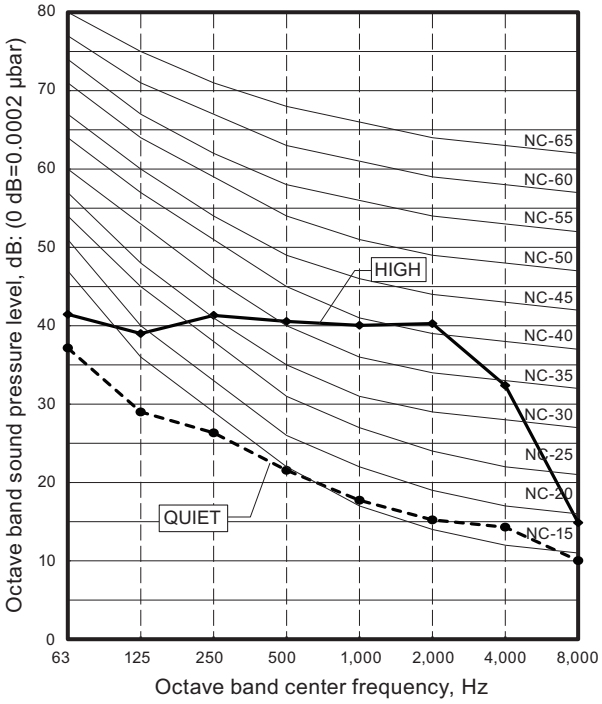

■ Model: ASEH07KGTG

● Cooling

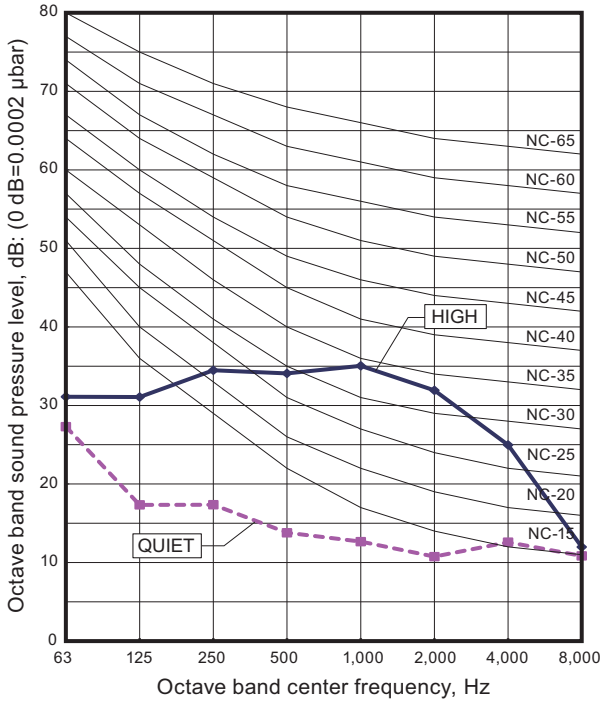

● Heating

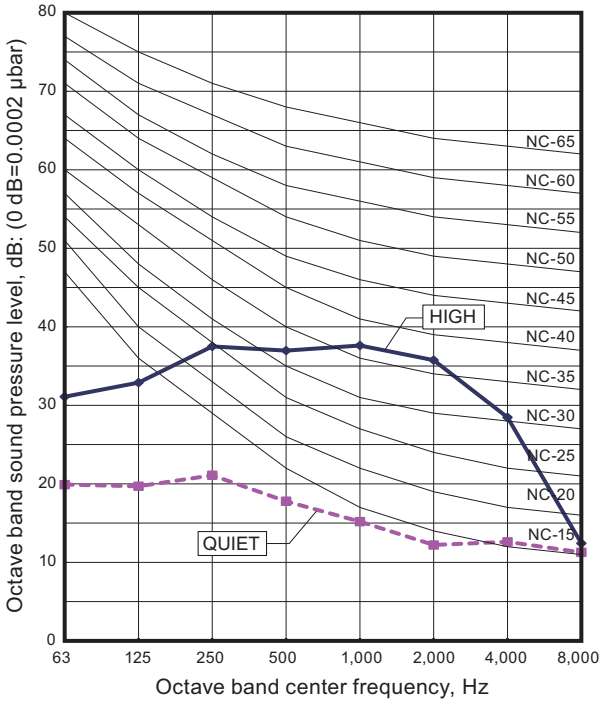

■ Model: ASEH09KGTG

● Cooling

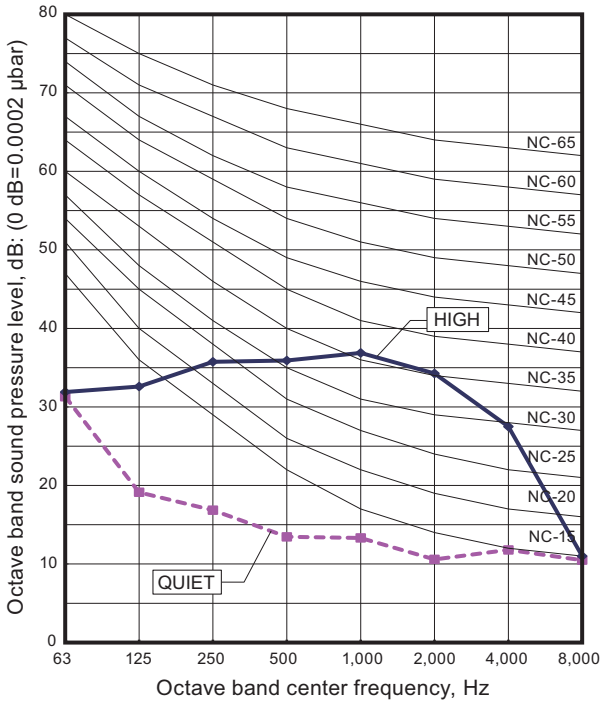

● Heating

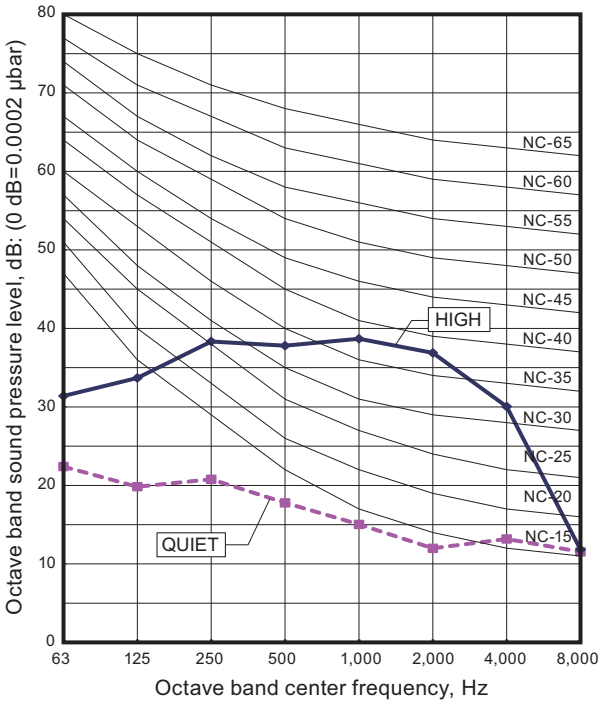

■ Model: ASEH12KGTG

● Cooling

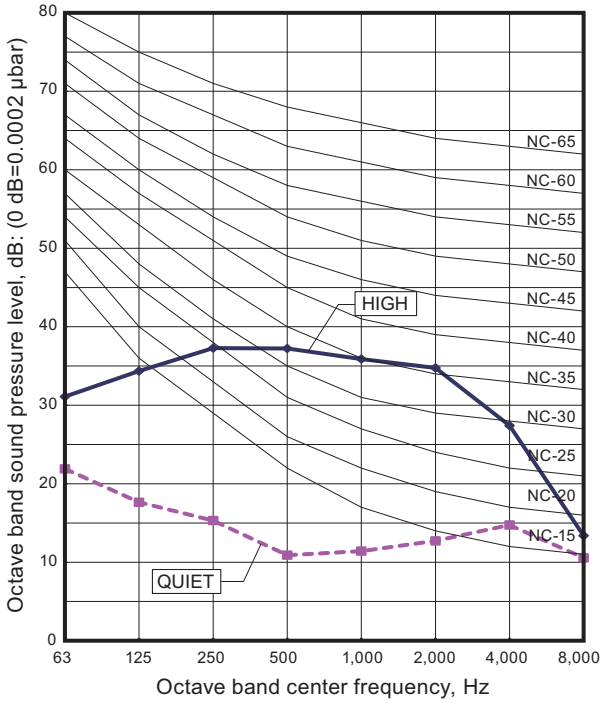

● Heating

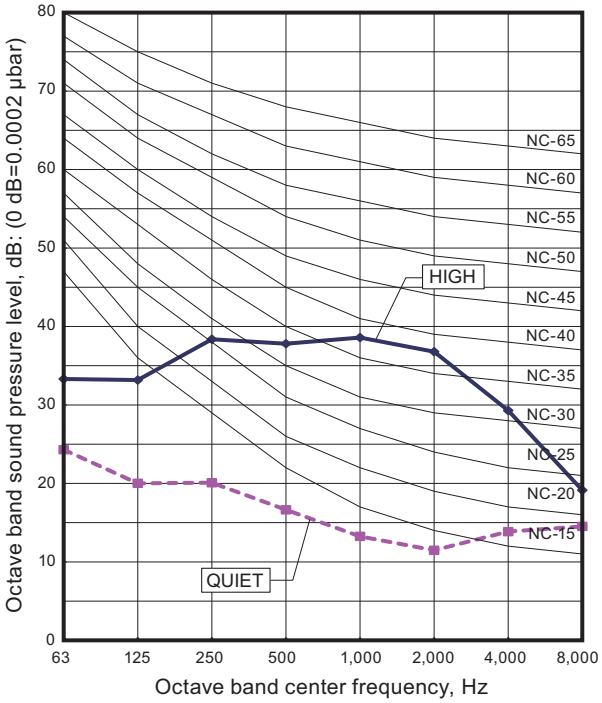

■ Model: ASEH14KGTG

● Cooling

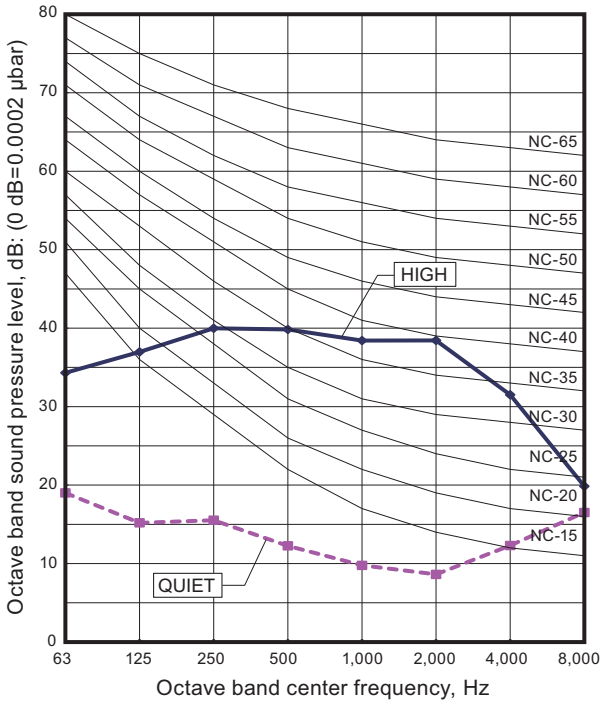

● Heating

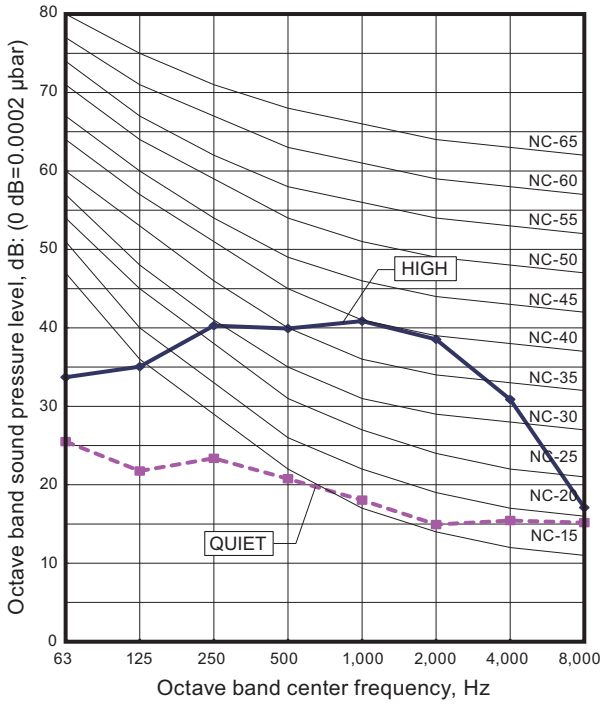

■ ASEH05KNCA

● Cooling

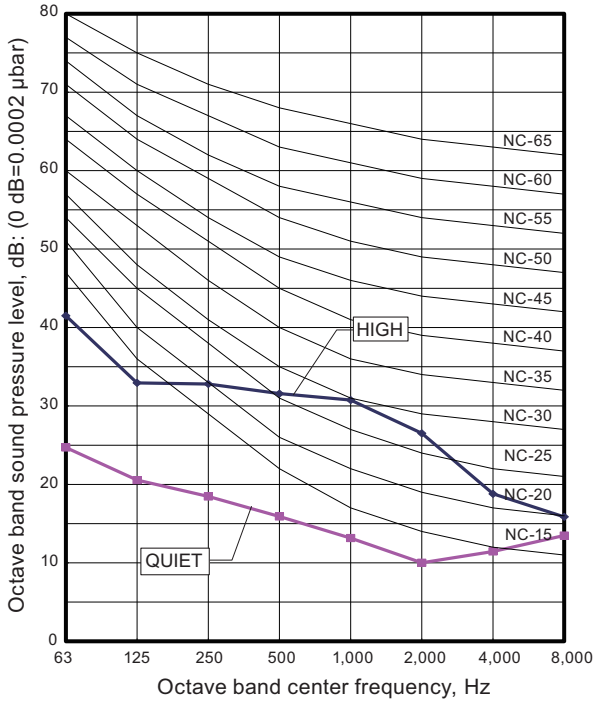

● Heating

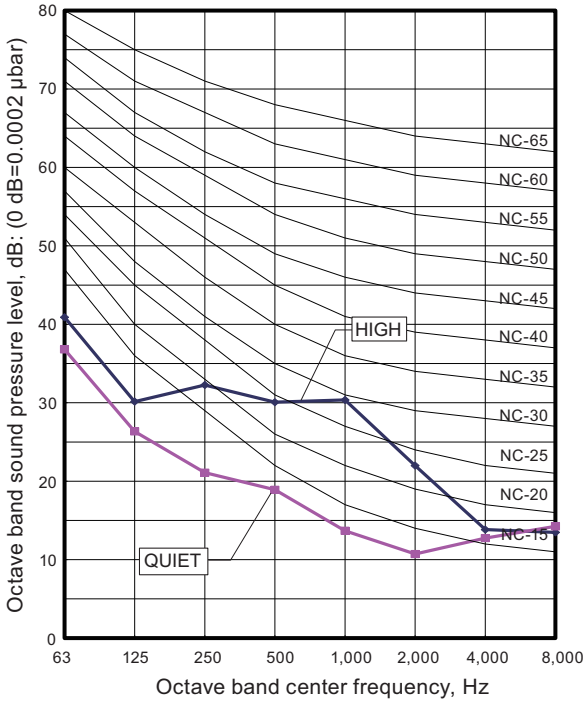

■ ASEH07KNCA

● Cooling

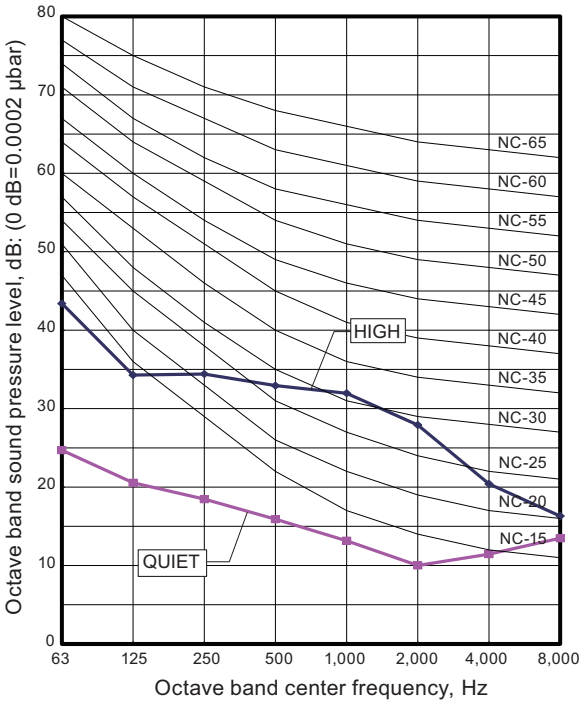

● Heating

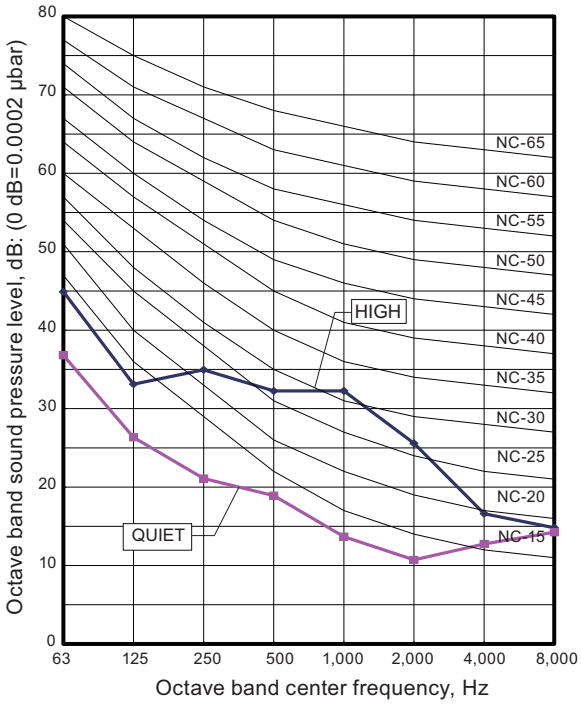

■ ASEH09KNCA

● Cooling

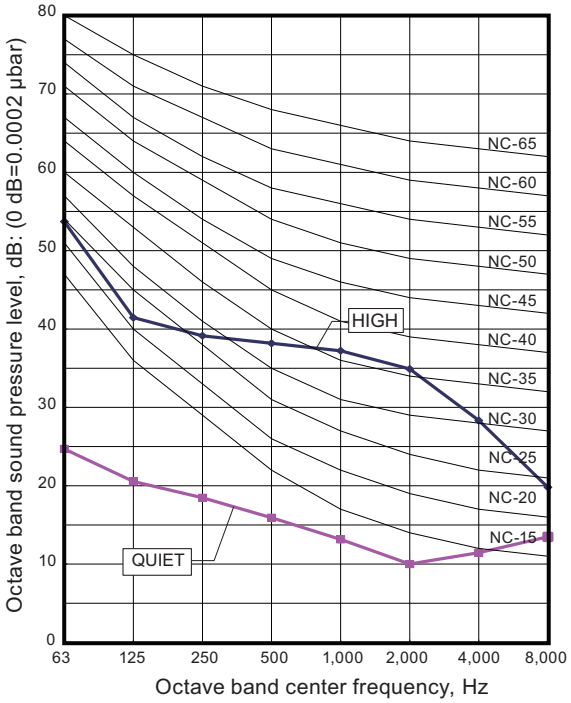

● Heating

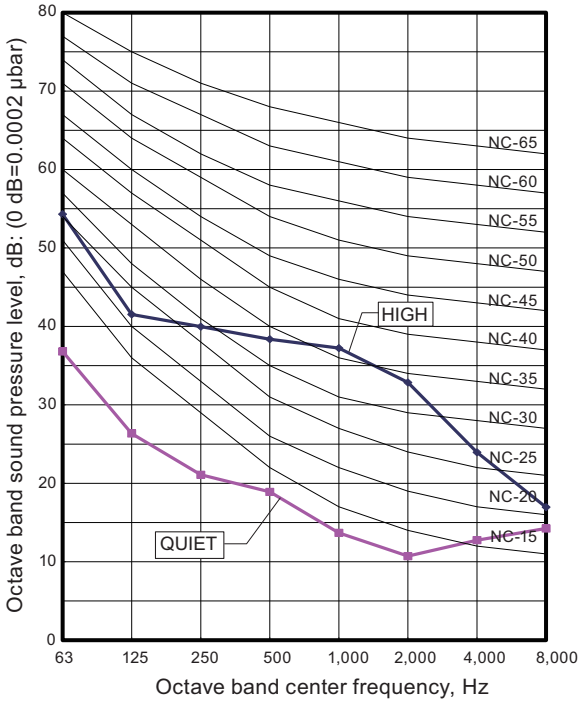

■ ASEH12KNCA

● Cooling

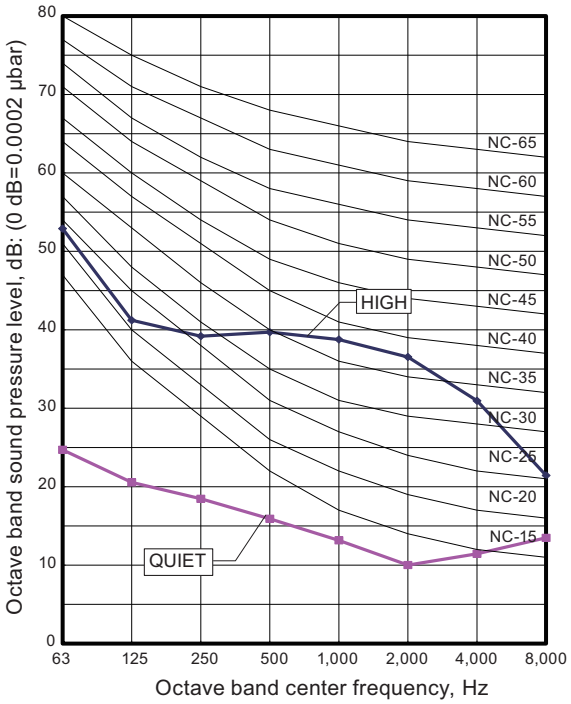

● Heating

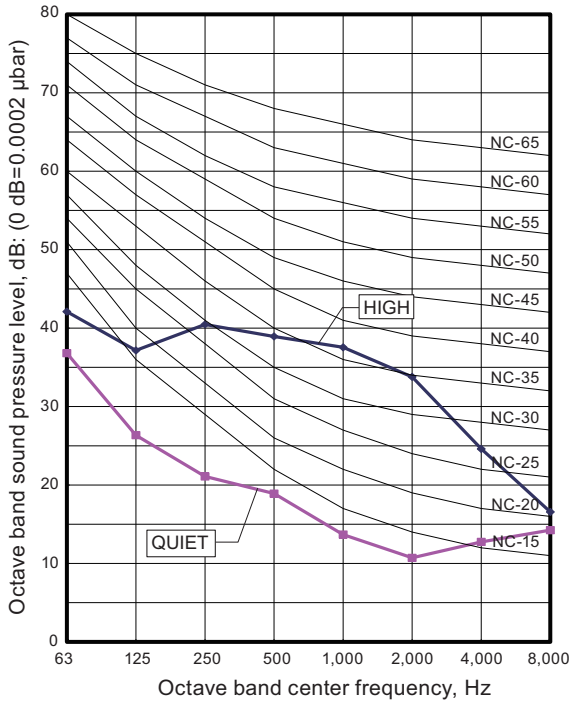

■ Model: ASEG18KMTE

● Cooling

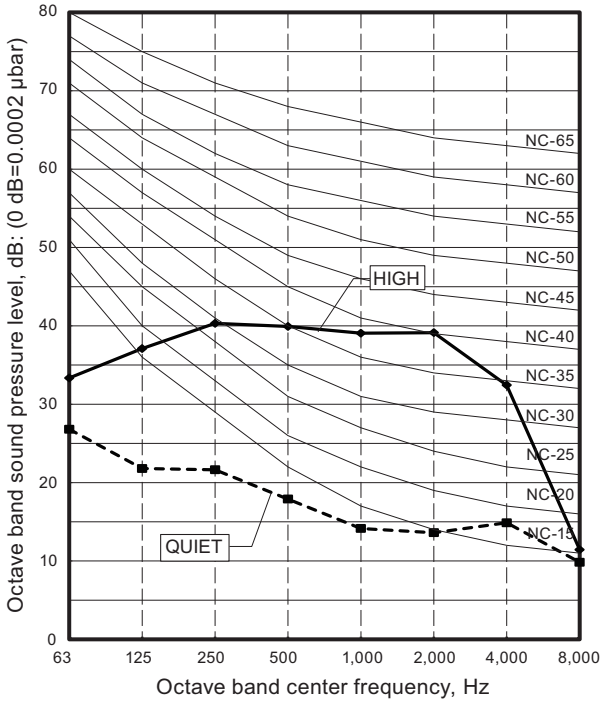

● Heating

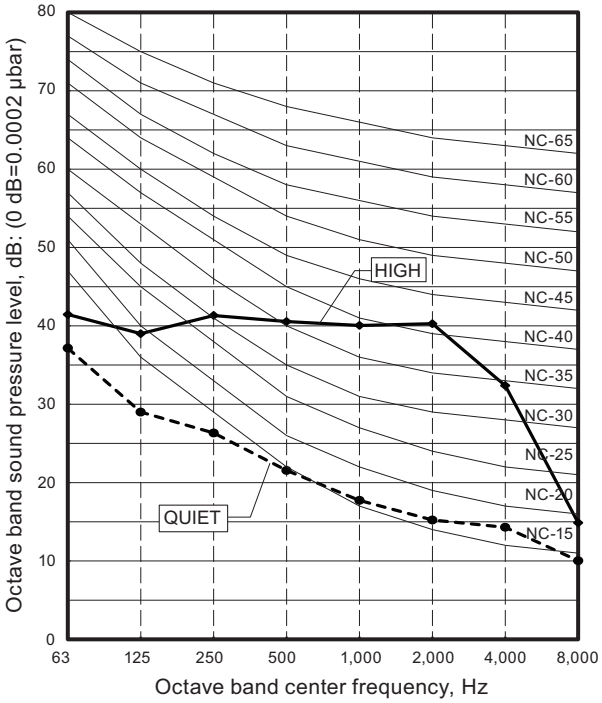

■ Model: ASEG22KMTE

● Cooling

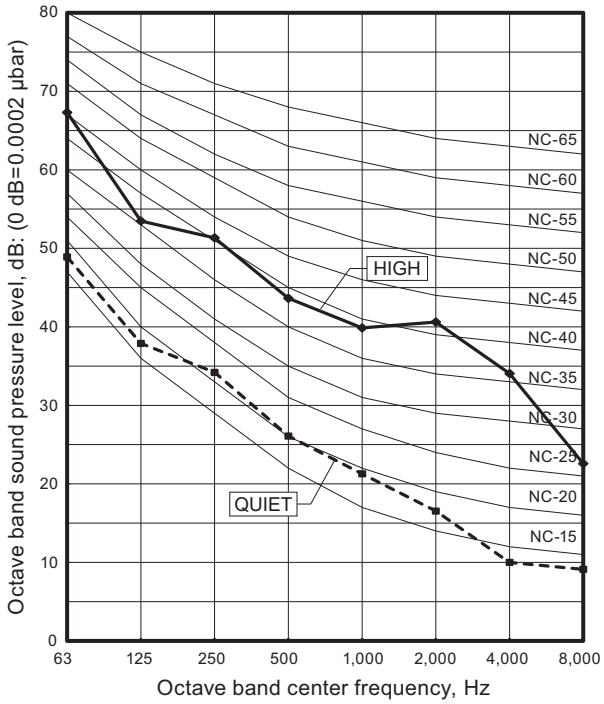

● Heating

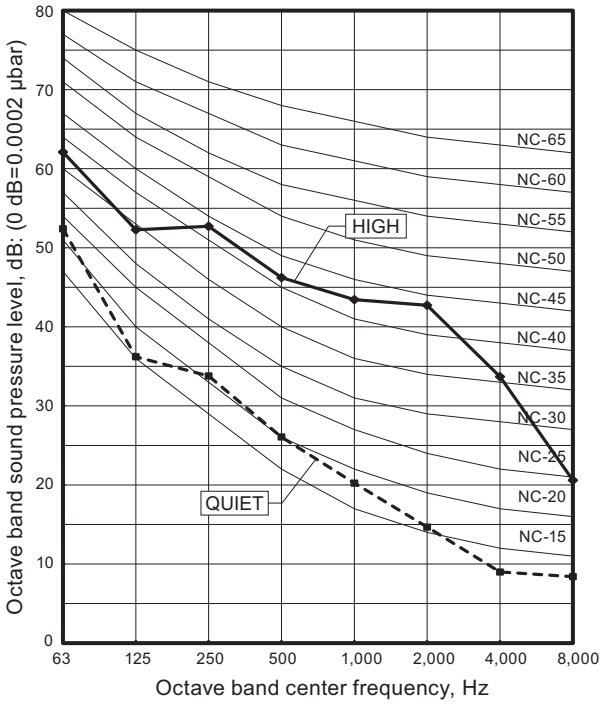

■ Model: ASEG24KMTE

● Cooling

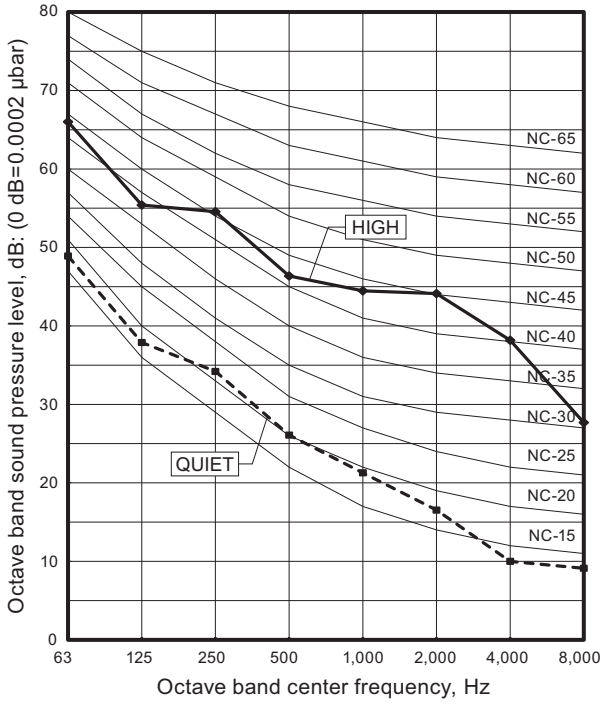

● Heating

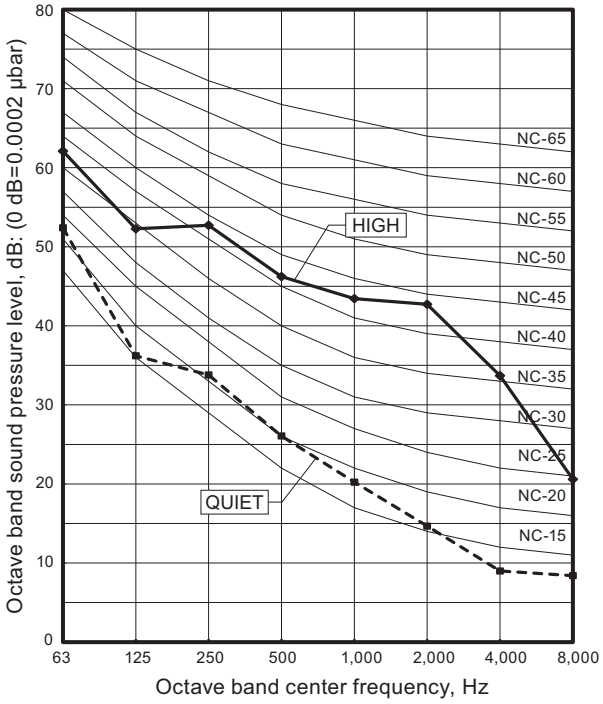

9-6. Ceiling type

■ Model: ABEG18KRTA

● Cooling

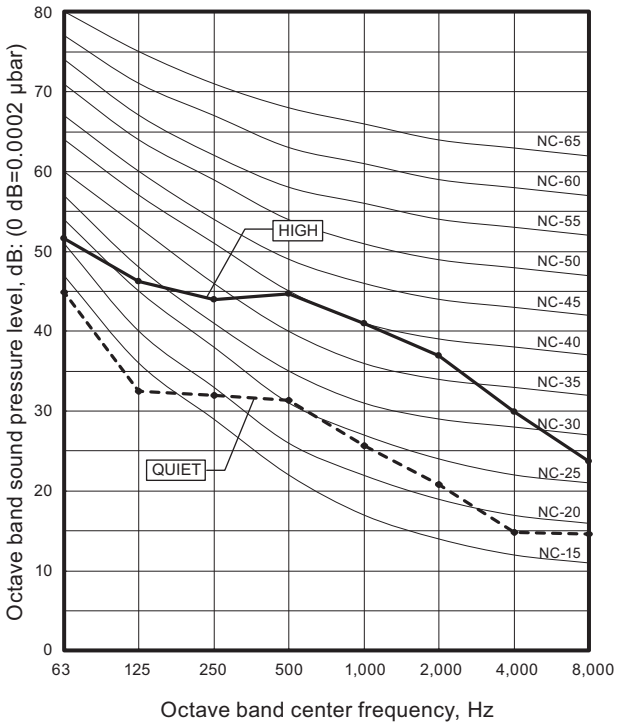

● Heating

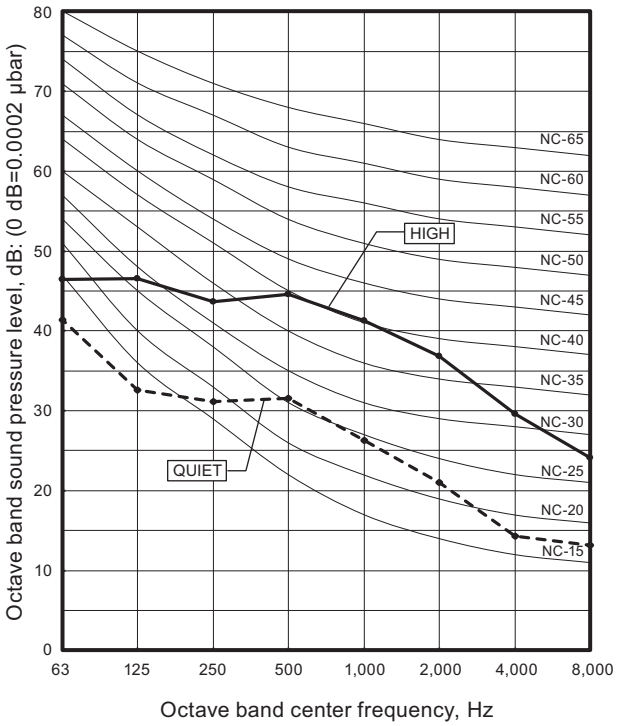

■ Model: ABEG22KRTA

● Cooling

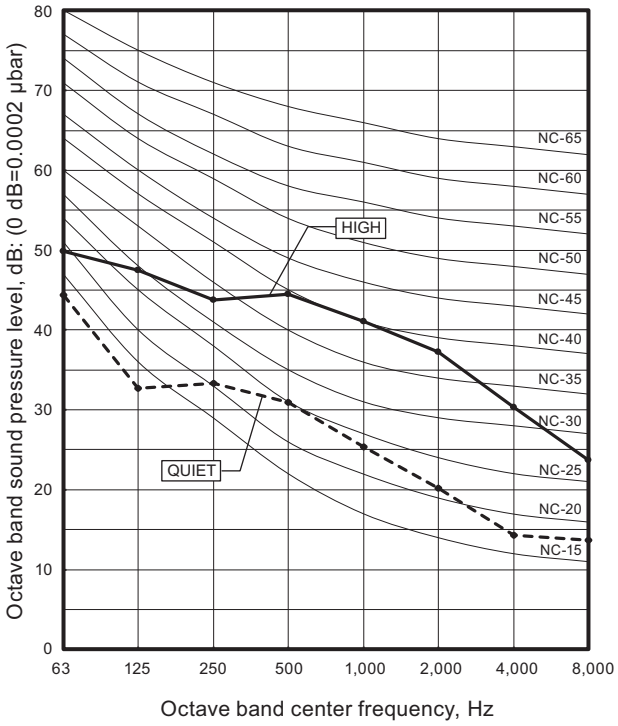

● Heating

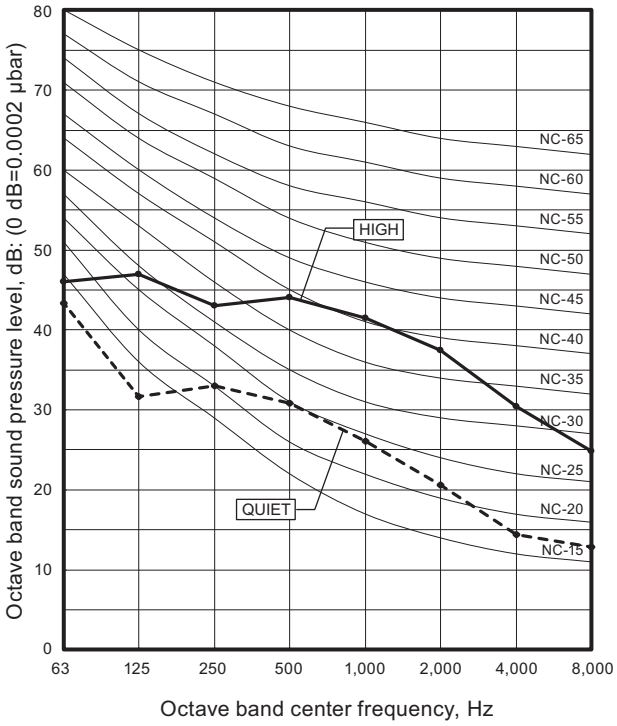

9-7. Floor type

■ Model: AGEG09KVCA

● Cooling

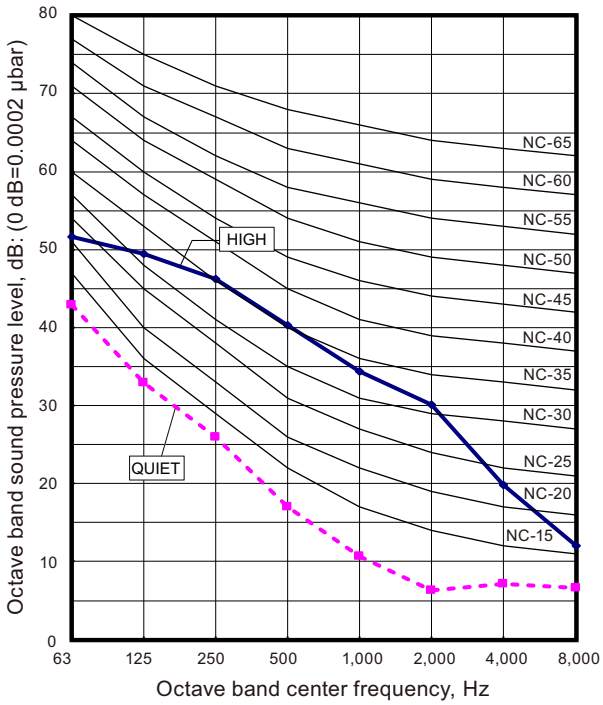

● Heating

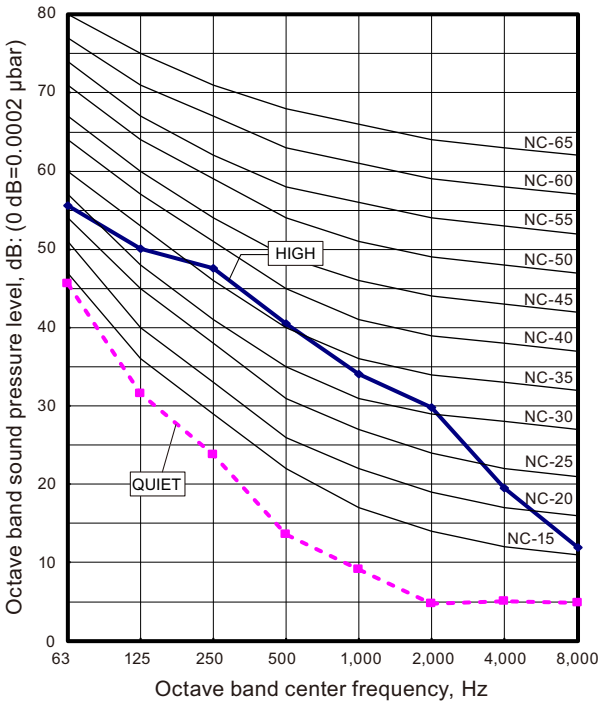

■ Model: AGEG12KVCA

● Cooling

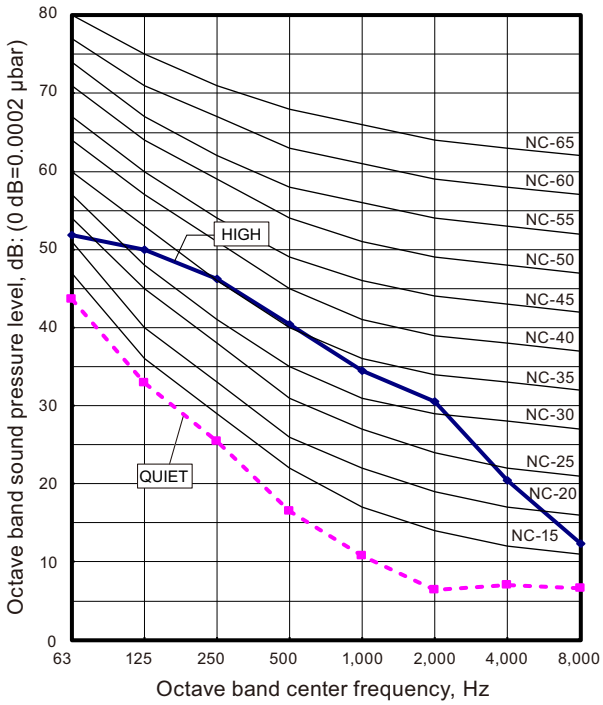

● Heating

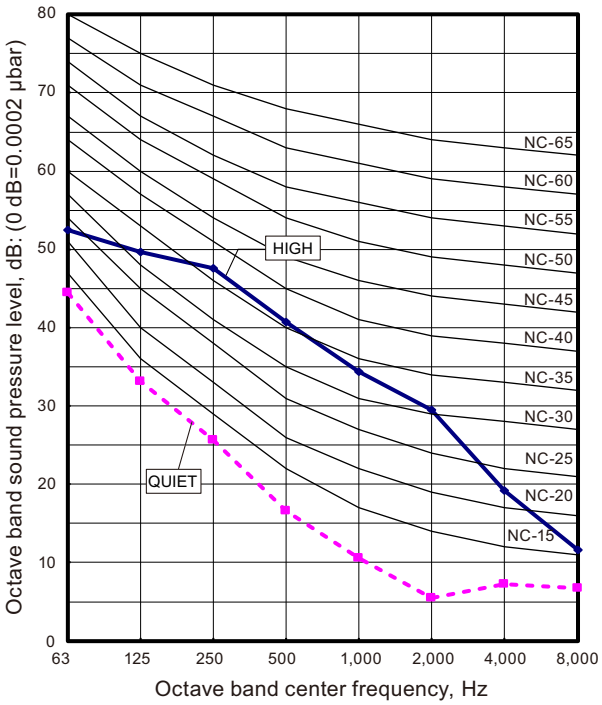

■ Model: AGEG14KVCA

● Cooling

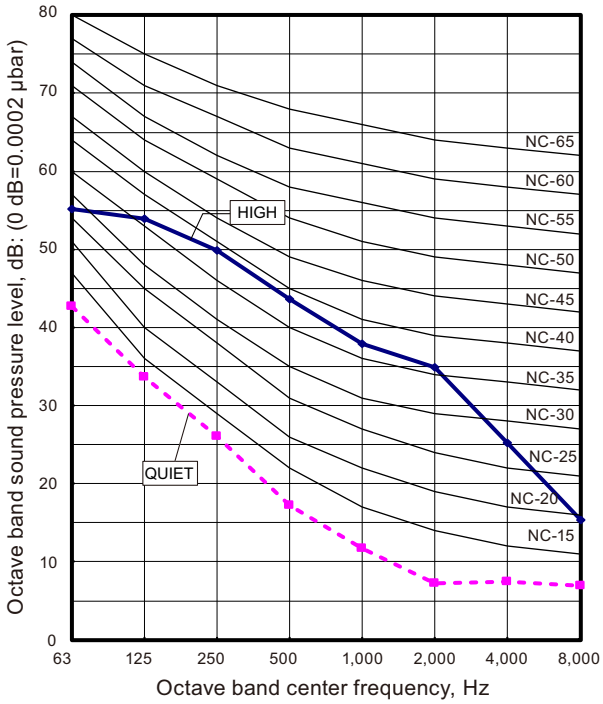

● Heating

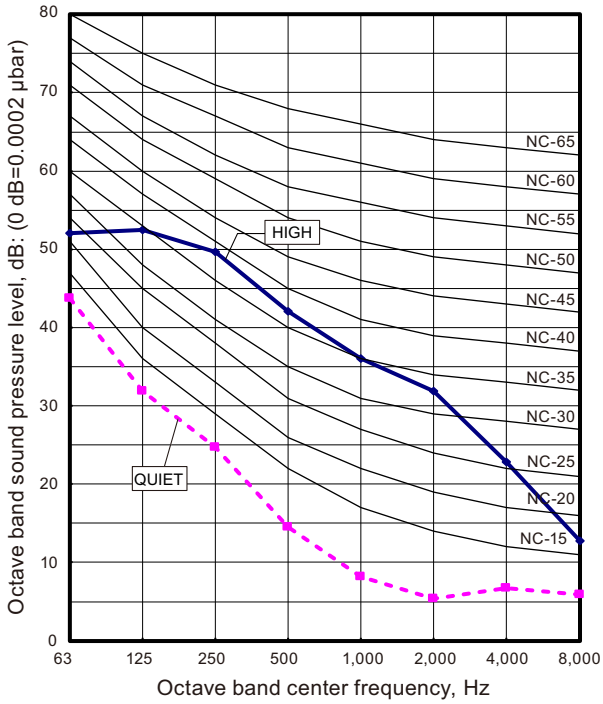

9-8. Sound level check point

■ Compact cassette type

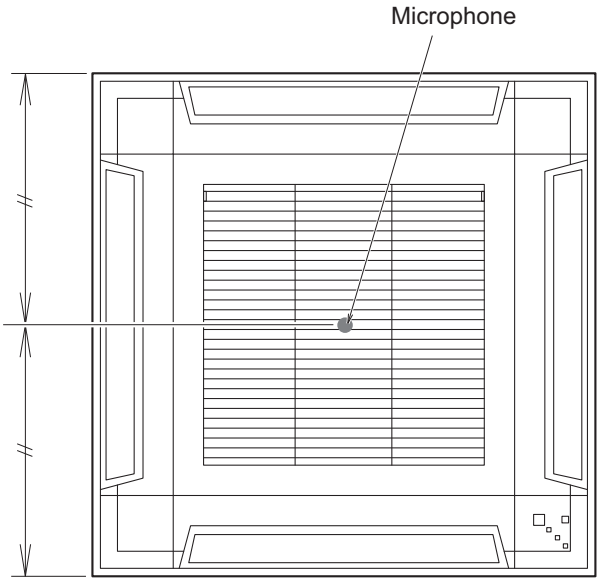

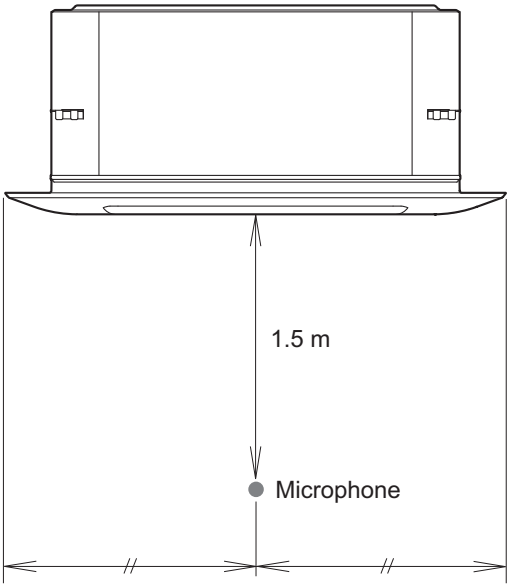

■ Mini duct type, Slim duct type, and Medium static pressure duct type

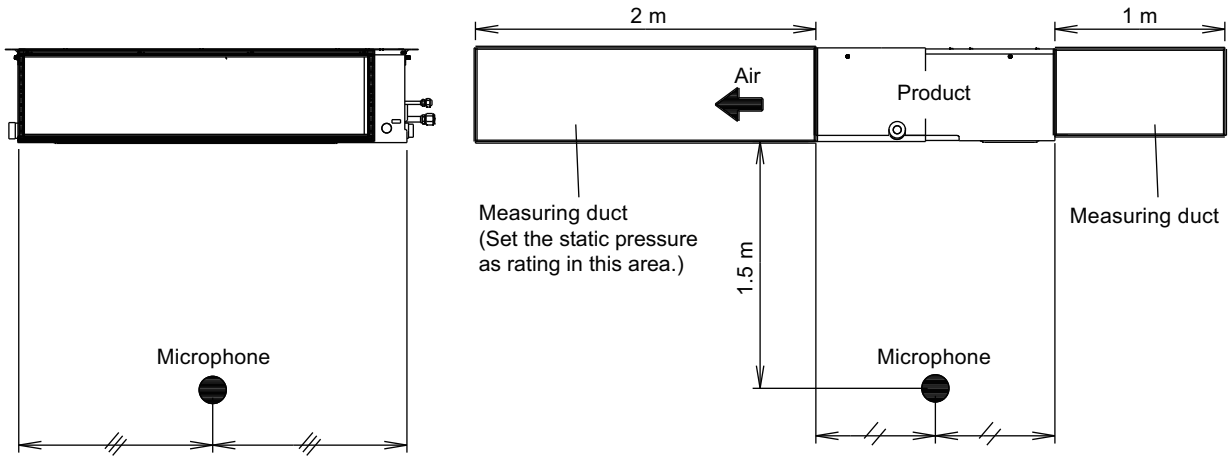

Front view

Side view

NOTE: Detailed shape of the actual indoor unit might be slightly different from the one illustrated above.

■ Wall mounted type

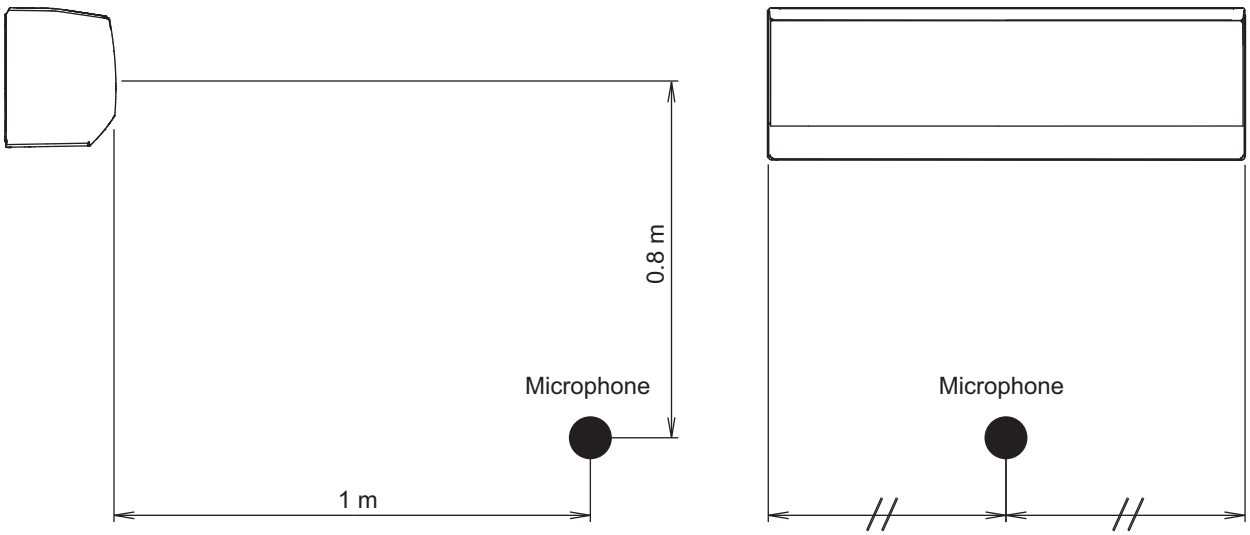

NOTE: Detailed shape of the actual indoor unit might be slightly different from the one illustrated above.

■ Ceiling type

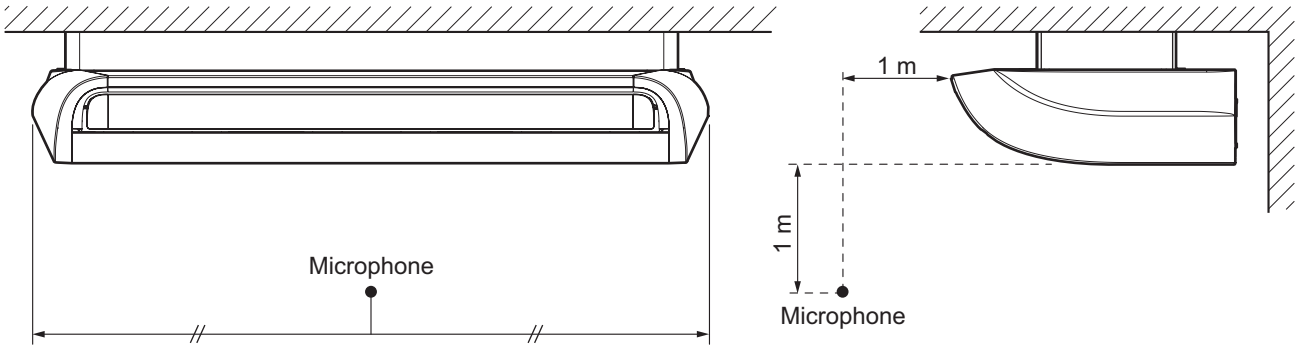

■ Floor type

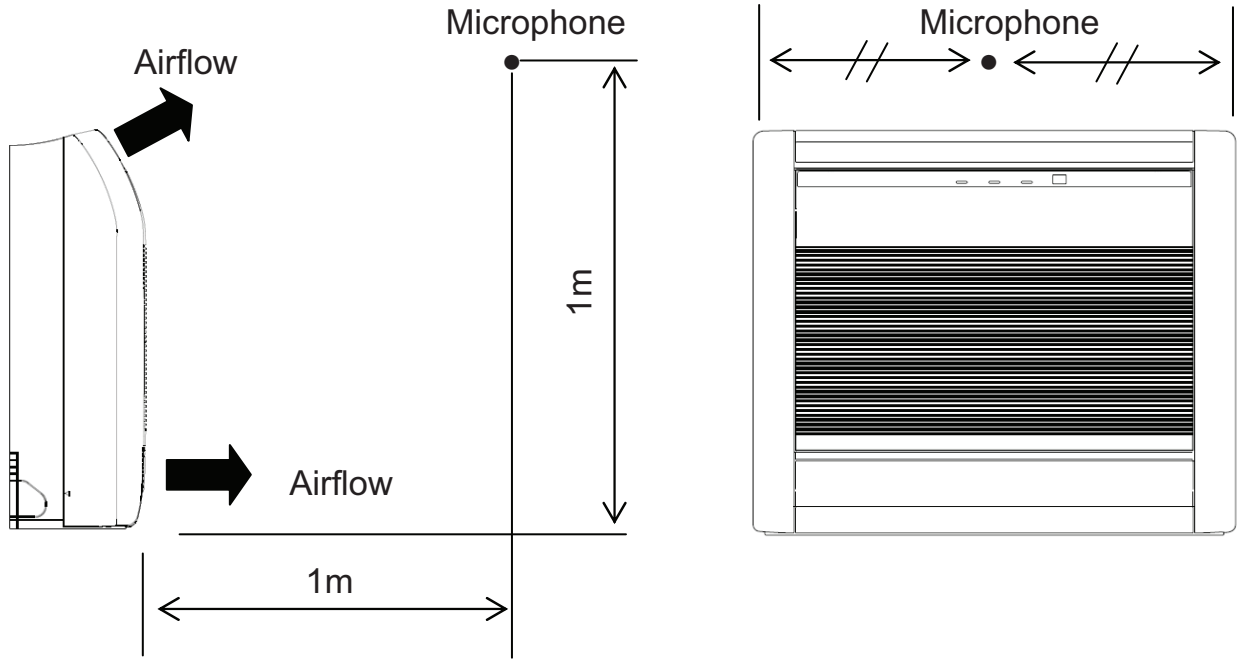

4-5 UNIT
MULTI-SPLIT TYPE

10. Electrical characteristics

		Power supply (50 Hz, 230 V)	Indoor rated		Wiring spec. of connection cable (Indoor unit to outdoor unit)	
Type	Model name	MCA	Input power	FLA	Cross- sectional area	Limited wiring length
		(A)	(W)	(A)	(mm^2)	(m)
Compact cassette	AUXG07KVLA	0.19	18	0.15	1.5	26
	AUXG09KVLA	0.19	18	0.15		
	AUXG12KVLA	0.24	23	0.19		
	AUXG14KVLA	0.28	28	0.22		
	AUXG18KVLA	0.38	39	0.30		
	AUXG22KVLA	0.75	84	0.62		
Mini duct	ARXG07KSLAP	0.33	33	0.29	1.5	26
	ARXG09KSLAP	0.38	40	0.33		
	ARXG12KSLAP	0.42	47	0.38		
	ARXG14KSLAP	0.67	72	0.58		
	ARXG18KSLAP	0.61	63	0.49		
Slim duct	ARXG07KLLAP	0.41	33	0.33	1.5	26
	ARXG09KLLAP	0.38	49	0.30		
	ARXG12KLLAP	0.44	58	0.35		
	ARXG14KLLAP	0.64	76	0.51		
	ARXG18KLLAP	0.55	73	0.44		
Medium static pressure duct	ARXG22KMLB	1.00	94	0.60	1.5	26
	ARXH12KMTAP	0.43	46	0.34		
	ARXH14KMTAP	0.62	70	0.49		
	ARXH18KMTAP	0.65	75	0.52		
	ARXH22KMTAP	0.63	79	0.50		
Wall mounted	ASEH07KMCG ASEH07KMCG-B	0.25	23	0.20	1.5	26
	ASEH09KMCG ASEH09KMCG-B	0.30	27	0.24		
	ASEH12KMCG ASEH12KMCG-B	0.30	27	0.24		
	ASEH14KMCG ASEH14KMCG-B	0.38	33	0.30		
Wall mounted	ASEG07KETF ASEG07KETF-B	0.25	23	0.20	1.5	26
	ASEG09KETF ASEG09KETF-B	0.30	27	0.24		
	ASEG12KETF ASEG12KETF-B	0.30	27	0.24		
	ASEG14KETF ASEG14KETF-B	0.38	33	0.30		
Wall mounted	ASEH07KGTG	0.25	23	0.20	1.5	26
	ASEH09KGTG	0.30	27	0.24		
	ASEH12KGTG	0.30	27	0.24		
	ASEH14KGTG	0.37	33	0.29		
Wall mounted	ASEH05KNCA	0.14	12	0.11	1.5	26
	ASEH07KNCA	0.15	13	0.12		
	ASEH09KNCA	0.24	21	0.19		
	ASEH12KNCA	0.25	22	0.20		
Wall mounted	ASEG18KMTE	0.44	38	0.35	1.5	26
	ASEG22KMTE	0.49	47	0.39		
	ASEG24KMTE	0.55	62	0.44		

4-5 UNIT
MULTI-SPLIT TYPE

		Power supply (50 Hz, 230 V)	Indoor rated		Wiring spec. of connection cable (Indoor unit to outdoor unit)	
Type	Model name	MCA	Input power	FLA	Cross- sectional area	Limited wiring length
		(A)	(W)	(A)	(mm^2)	(m)
Ceiling	ABEG18KRTA	0.39	37	0.21	1.5	26
	ABEG22KRTA	0.49	46	0.25		
Floor	AGEG09KVCA	0.19	16	0.15	1.5	26
	AGEG12KVCA	0.23	20	0.18		
	AGEG14KVCA	0.25	23	0.20		

MCA: Minimum Circuit Ampacity = Maximum operating current (Full load)
FLA: Full Load Amperes (Fan motor)

11. Safety devices

Indoor unit type	Model name	PCB* fuse	Fan motor thermal protector	Terminal thermal fuse	Float switch
Compact cassette	AUXG07KVLA	250 V, 5 A	Activate: 100 ±15 °C Fan motor stop Reset: 95 ±10 °C Fan motor restart	—	○
	AUXG09KVLA				
	AUXG12KVLA				
	AUXG14KVLA				
	AUXG18KVLA				
	AUXG22KVLA				
Mini duct	ARXG07KSLAP		Activate: 135 ±15 °C Fan motor stop Reset: 105 ±15 °C Fan motor restart		
	ARXG09KSLAP				
	ARXG12KSLAP				
	ARXG14KSLAP				
	ARXG18KSLAP				
Slim duct	ARXG07KLLAP				
	ARXG09KLLAP				
	ARXG12KLLAP				
	ARXG14KLLAP				
	ARXG18KLLAP		Activate: 135 ±15 °C Fan motor stop Reset: 115 ±15 °C Fan motor restart		
Medium static pressure duct	ARXG22KMLB	250 V, 5 A	Activate: 135 ±15 °C Fan motor stop Reset: 115 ±15 °C Fan motor restart	—	—
	ARXH12KMTAP		Activate: 135—150 °C Fan motor stop Reset: 105—120 °C Fan motor restart		○
	ARXH14KMTAP		Activate: 135—150 °C Fan motor stop Reset: 105—120 °C Fan motor restart		
	ARXH18KMTAP		Activate: 135—150 °C Fan motor stop Reset: 105—120 °C Fan motor restart		
	ARXH22KMTAP		Activate: 115 ±15 °C Fan motor stop Reset: 70 °C Fan motor restart		
Wall mounted	ASEH07KMCG ASEH07KMCG-B	250 V, 3.15 A	Activate: 170 $^{+25}_{-30}$ °C Fan motor stop Reset: 145 $^{+25}_{-30}$ °C Fan motor restart	—	—
	ASEH09KMCG ASEH09KMCG-B				
	ASEH12KMCG ASEH12KMCG-B				
	ASEH14KMCG ASEH14KMCG-B				

4-5 UNIT MULTI-SPLIT TYPE

Indoor unit type	Model name	PCB* fuse	Fan motor thermal protector	Terminal thermal fuse	Float switch
Wall mounted	ASEG07KETF ASEG07KETF-B	250 V, 3.15 A	Activate: 110 ±15 °C Fan motor speed down Reset: 110 ±15 °C Fan motor speed recover	102 °C Off	—
	ASEG09KETF ASEG09KETF-B				
	ASEG12KETF ASEG12KETF-B				
	ASEG14KETF ASEG14KETF-B		Activate: 125 ±10 °C Fan motor stop Reset: 100 ±10 °C Fan motor restart		
Wall mounted	ASEH07KGTG	250 V, 3.15 A	Activate: 110 ±15 °C Fan motor speed down Reset: 110 ±15 °C Fan motor speed recover	102 °C Off	—
	ASEH09KGTG				
	ASEH12KGTG		Activate: 125 ±10 °C Fan motor stop Reset: 100 ±10 °C Fan motor restart		
	ASEH14KGTG				
Wall mounted	ASEG18KMTE	250 V, 3.15 A	Activate: 125 ±10 °C Fan motor stop Reset: 100 ±10 °C Fan motor restart	102 °C Off	—
	ASEG22KMTE				
	ASEG24KMTE				
Ceiling	ABEG18KRTA	250 V, 3.15 A	Activate: 135 ±15 °C Fan motor stop Reset: 105 ±15 °C Fan motor restart	108 °C Off	—
	ABEG22KRTA	250V, 5.0 A			
Floor	AGEG09KVCA	250V, 5.0 A	Activate: 150 ±15 °C Fan motor stop Reset: 120 ±15 °C Fan motor restart	110 °C Off	—
	AGEG12KVCA				
	AGEG14KVCA				

*: Printed Circuit Board

12. External input and output

12-1. Compact cassette type, Medium static pressure duct type (ARXH12–22KMTAP), and Ceiling type

- **Compact cassette type and Ceiling type**

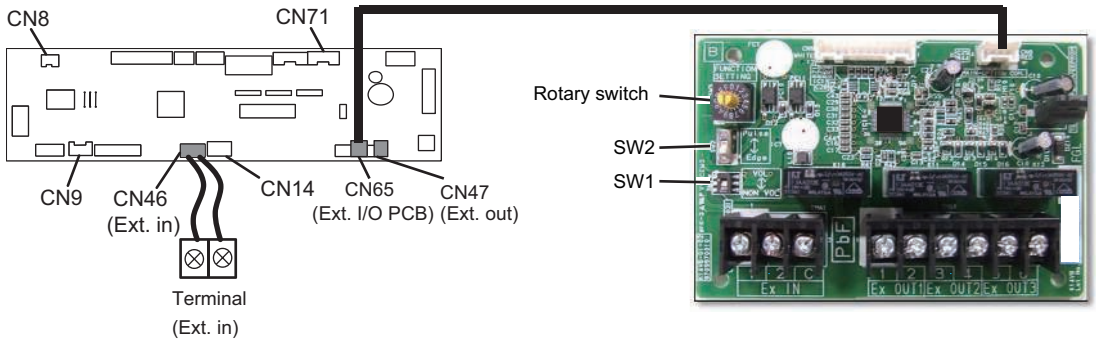

Fig. Indoor unit PCB

Fig. External Input and Output PCB

- **Medium static pressure duct type (ARXH12–22KMTAP)**

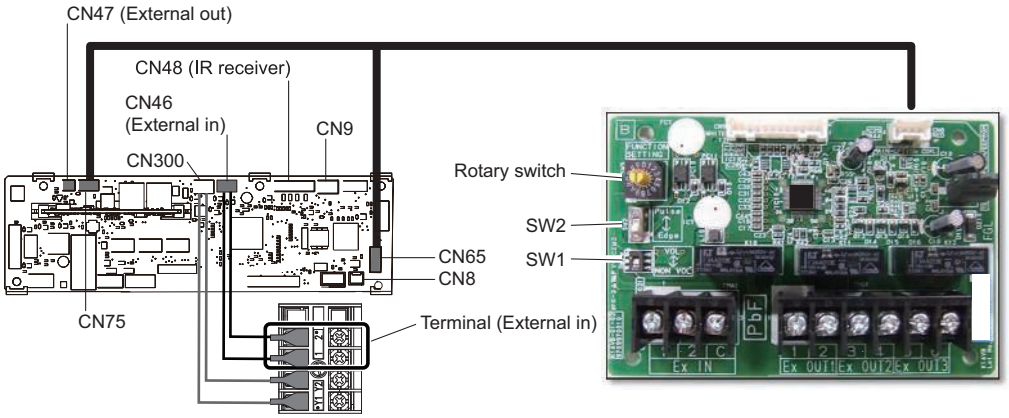

Fig. Indoor unit PCB

Fig. External Input and Output PCB

Connecting point		Input/Output	Function	Input select	Input signal
Indoor unit	Terminal	Input	Operation/Stop	Dry contact	Edge
			Forced stop		
	CN47	Output	Operation/Stop	—	—
			Error status		
			Indoor unit fan operation status		
			External heater output		
External Input and Output PCB (UTY-XCSX)	Ex IN 1/2	Input	Operation/Stop	Dry contact/Apply voltage	Edge/Pulse
	Ex IN 1		Forced thermostat off		Edge
	Ex OUT 1 Ex OUT 2 Ex OUT 3	Output	Operation/Stop	—	—
			Error status		
			Indoor unit fan operation status		
			External heater output		

NOTE: For details of the switching function, refer to "Setting of external input and output" on page 191.

4-5 UNIT MULTI-SPLIT TYPE

■ External input

With using external input function, some functions on this product can be controlled from an external device.

- “Operation/Stop” mode or "Forced stop" mode can be selected with function setting of indoor unit.
- A twisted pair cable should be used. Maximum length of cable is 150 m.
- Use an external input and output cable with appropriate external dimension, depending on the number of cables to be installed.
- The wire connection should be separate from the power cable line.

● Indoor unit

Indoor unit functions such as Operation/Stop can be done by using indoor unit terminal.

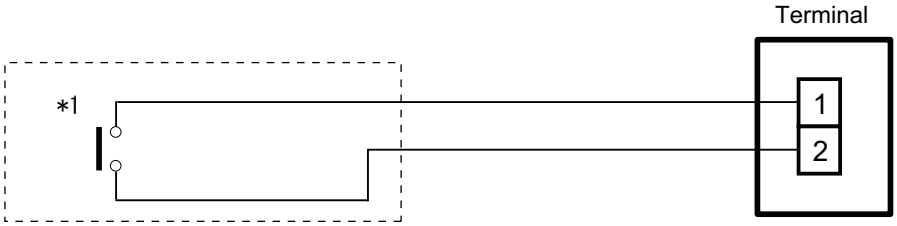

*1: The switch can be used on the following condition: DC 12 V to 24 V, 1 mA to 15 mA.

● External Input and Output PCB

The indoor unit Operation/Stop can be set by using the input terminal on the PCB.

- **Input select**
  Use either one of these types of terminal according to the application. (Both types of terminal cannot be used simultaneously.)
  - **Dry contact**
    In case of internal power supply, set the slide switch of SW1 to "NON VOL" side.

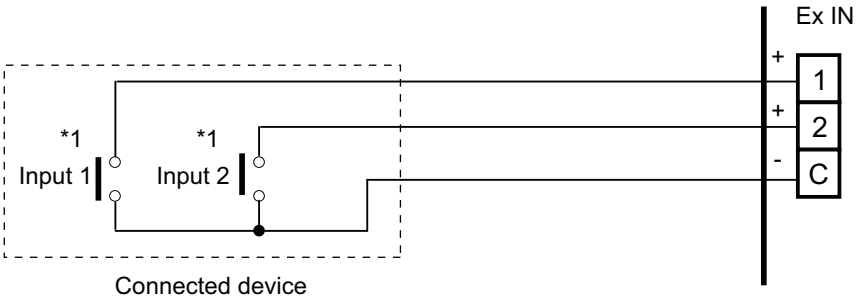

*1: The switches can be used on the following condition: DC 12 V to 24 V, 1 mA to 15 mA.

  - **Apply voltage**
    In case of external power supply, set the slide switch of SW1 to “VOL” side.

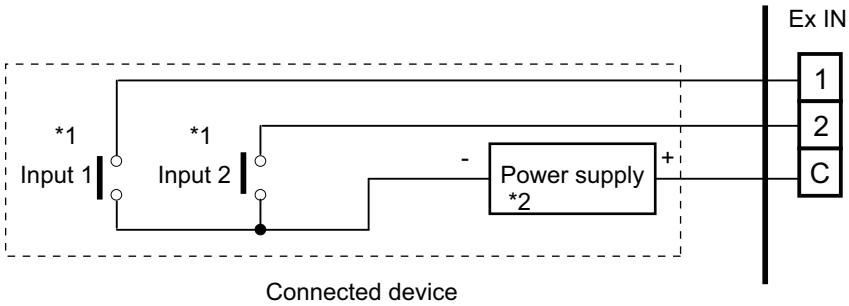

*1: The switches can be used on the following condition: DC 12 V to 24 V, 1 mA to 15 mA.
*2: Make the power supply DC 12 V to 24 V, 10 mA or more.

4-5 UNIT
MULTI-SPLIT TYPE

● Input signal type

- **Indoor unit**
  Input signal type is only "Edge".

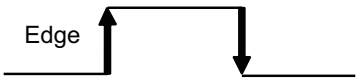

- **External Input and Output PCB**
  The input signal type can be selected.
  Signal type (edge or pulse) can be switched by the DIP switch 2 (SW2) on the External Input and Output PCB.

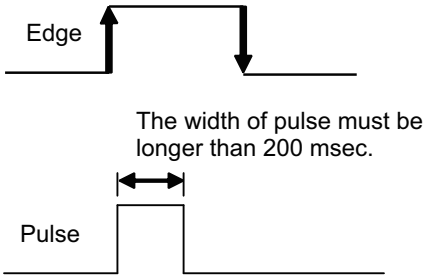

NOTE: The input signal supports the following switch type:
- Edge: Alternate type switch
- Pulse: Momentary type switch

4-5 UNIT MULTI-SPLIT TYPE

■ External output

Use an external output cable with appropriate external dimension, depending on the number of cables to be installed.

● Indoor unit

- A twisted pair cable (22 AWG) should be used. Maximum length of cable is 25 m.
- Output voltage: High DC 12 V ±2 V, Low 0 V.
- Permissible current: 50 mA
- For details, refer to "Setting of external input and output" on page 191.

- **When indicator, etc. are connected directly**

Example: Function setting number 60 is set to "00"

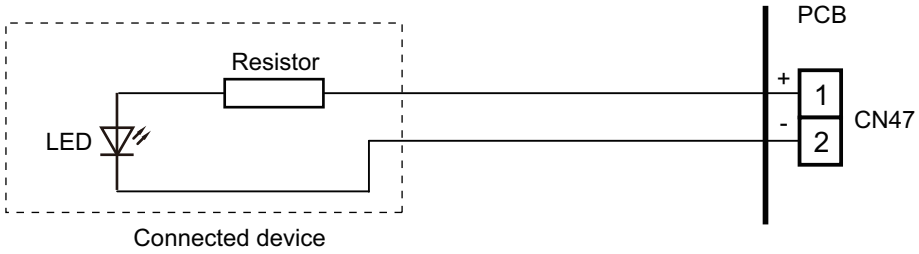

- **When connecting with a device equipped with a power supply**

Example: Function setting number 60 is set to "00"

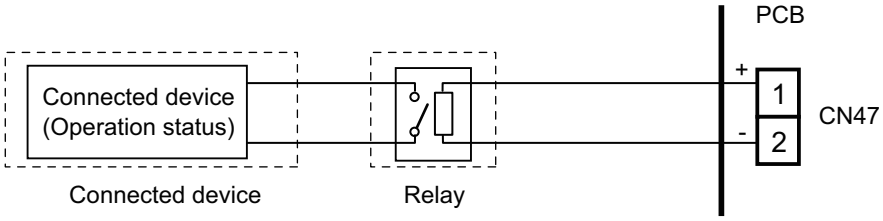

● External Input and Output PCB

- A twisted pair cable (22 AWG) should be used.
- Permissible voltage and current: DC 5 V to 30 V/3 A, AC 30 V to 250 V/3 A
- For details, refer to "Setting of external input and output" on page 191.

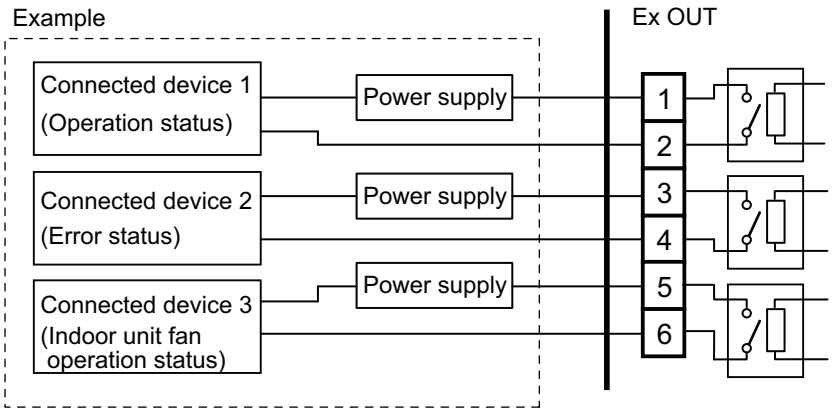

4-5 UNIT MULTI-SPLIT TYPE

■ Setting of external input and output

- **Indoor unit**

Input		
Connecting point	**Function setting number 46**	**Function**
Terminal	00	Operation/Stop mode 1
	01	(Setting prohibited)
	02	Forced stop mode
	03	Operation/Stop mode 2

Output		
Connecting point	**Function setting number 60**	**Function**
CN47	00	Operation/Stop
	01 to 08	(Setting prohibited)
	09	Error status
	10	Indoor unit fan operation status
	11	External heater output

- **External Input and Output PCB**

Switch setting		Input		Output		
Rotary switch	**SW2**	**Ex IN 1**	**Ex IN 2**	**Ex OUT 1**	**Ex OUT 2**	**Ex OUT 3**
1	Edge	Operation/Stop	Not available	Operation/Stop	Error status	Indoor unit fan operation status
	Pulse	Operation	Stop			
2	Edge*	Forced thermostat off	Not available	Error status	Indoor unit fan operation status	External heater output
3 to 9, A		(Setting prohibited)				
B		Forced thermostat off	Not available	Operation/Stop	Indoor unit fan operation status	External heater output
C		Forced thermostat off	Not available	Operation/Stop	Error status	External heater output
D		Forced thermostat off	Not available	Operation/Stop	Indoor unit fan operation status	Error status

NOTES:

- When the rotary switch is selected to “1", the operation of the terminal input of the indoor unit and the External Input and Output PCB input are the same. The operation content depends on the setting of function setting number 46.
- *: The external input other than “Operation/Stop” is available only when the SW2 is set to “Edge”.

4-5 UNIT MULTI-SPLIT TYPE

■ Details of control input function

● Operation/Stop mode 1

- **In the case of "Edge" input**

Function setting	External Input and Output PCB		External input		Input signal	Command
	Rotary switch	SW2				
46-00	—		Input of indoor unit	Terminal	Off → On	Operation
					On → Off	Stop
	1	Edge	External Input and Output PCB	Ex IN 1	Off → On	Operation
					On → Off	Stop

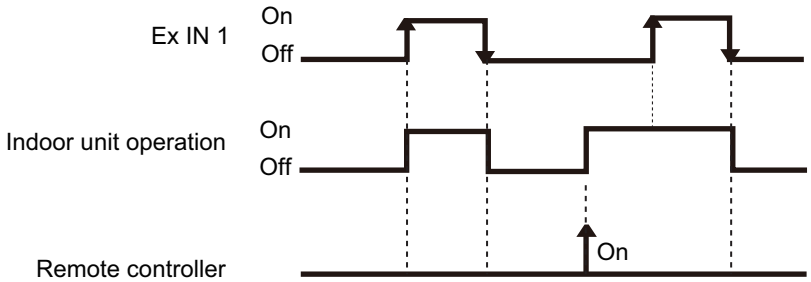

- **In the case of "Pulse" input**

Function setting	External Input and Output PCB		External input		Input signal	Command
	Rotary switch	SW2				
46-00	1	Pulse	External Input and Output PCB	Ex IN 1	Pulse	Operation
				Ex IN 2		Stop

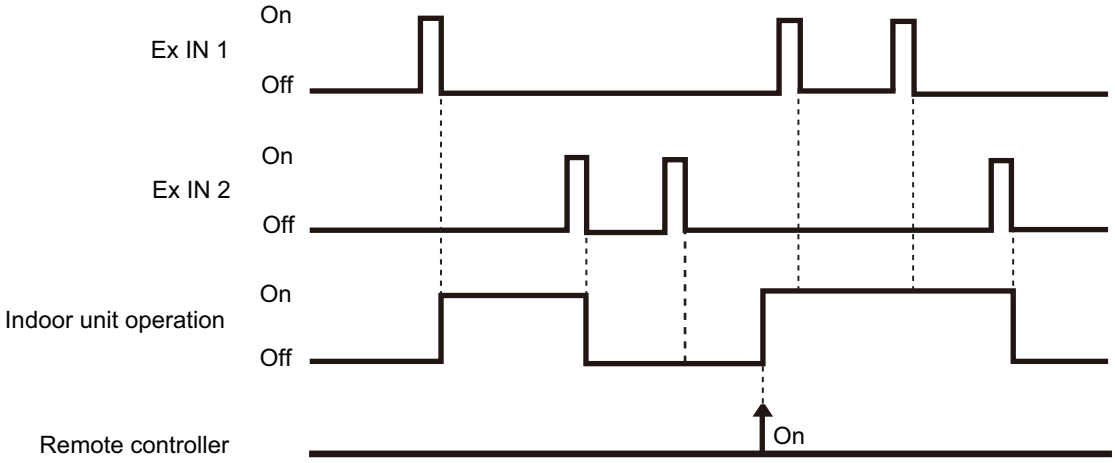

NOTES:

- The last command has priority.
- The indoor units within the same remote controller group operates in the same mode.

4-5 UNIT MULTI-SPLIT TYPE

● Forced stop

- **In the case of "Edge" input**

Function setting	External Input and Output PCB		External input		Input signal	Command
	Rotary switch	SW2				
46-02	—		Input of indoor unit	Terminal	Off → On	Forced stop (R.C. disabled)
					On → Off	Normal (R.C. enabled)
	1	Edge	External Input and Output PCB	Ex IN 1	Off → On	Forced stop (R.C. disabled)
					On → Off	Normal (R.C. enabled)

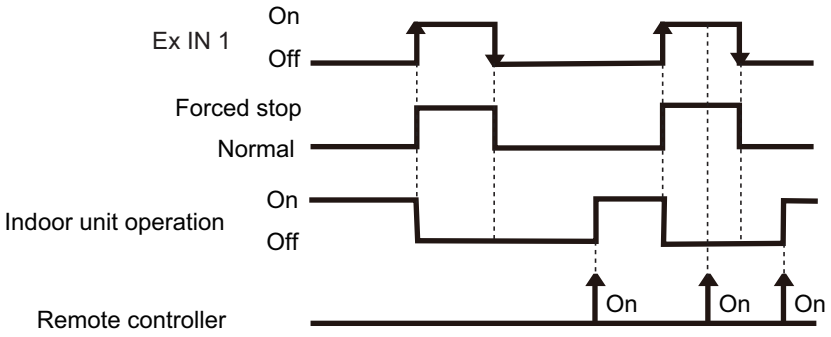

- **In the case of "Pulse" input**

Function setting	External Input and Output PCB		External input		Input signal	Command
	Rotary switch	SW2				
46-02	1	Pulse	External Input and Output PCB	Ex IN 1	Pulse	Forced stop (R.C. disabled)
				Ex IN 2		Normal (R.C. enabled)

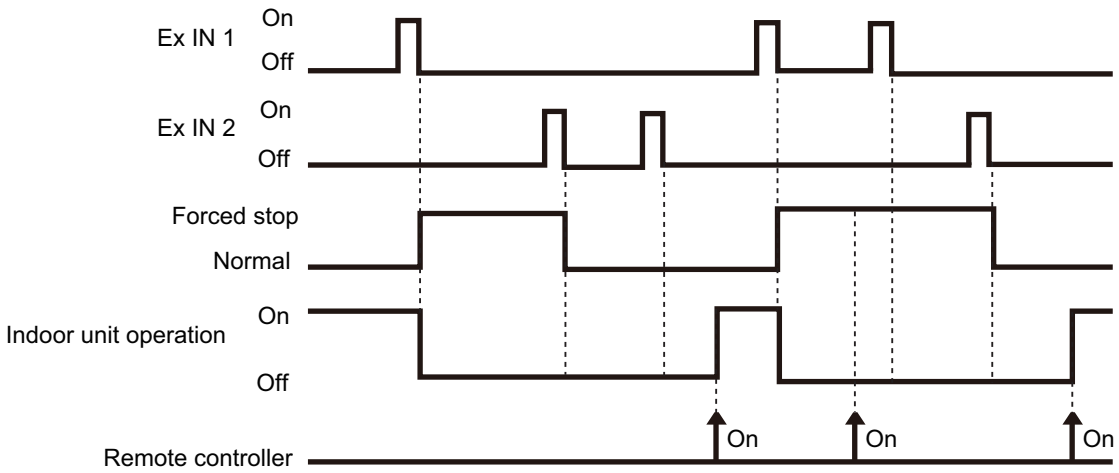

NOTES:

- When the forced stop is triggered, indoor unit stops and Operation/Stop operation by the remote controller is restricted.
- When forced stop function is used with forming a remote controller group, connect the same equipment to each indoor unit within the group.

4-5 UNIT MULTI-SPLIT TYPE

● Operation/Stop mode 2

- **In the case of "Edge" input**

Function setting	External Input and Output PCB		External input		Input signal	Command
	Rotary switch	SW2				
46-03	—		Input of indoor unit	Terminal	Off → On	Operation (R.C. enabled)
					On → Off	Stop (R.C. disabled)
	1	Edge	External Input and Output PCB	Ex IN 1	Off → On	Operation (R.C. enabled)
					On → Off	Stop (R.C. disabled)

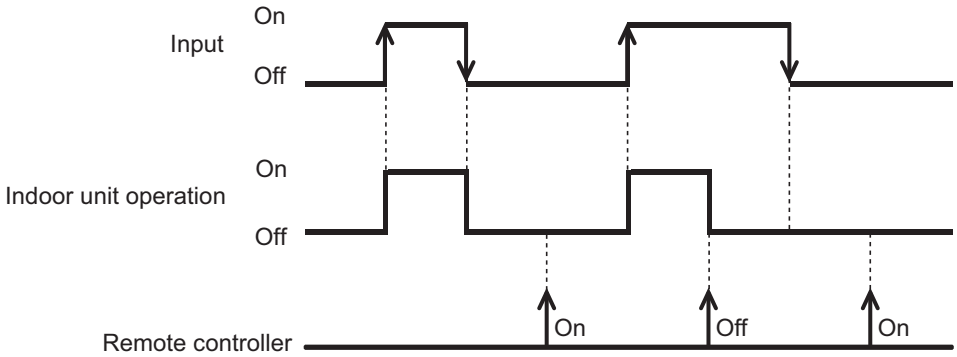

- **In the case of "Pulse" input**

Function setting	External Input and Output PCB		External input		Input signal	Command
	Rotary switch	SW2				
46-03	1	Pulse	External Input and Output PCB	Ex IN 1	Pulse	Operation (R.C. enabled)
				Ex IN 2		Stop (R.C. disabled)

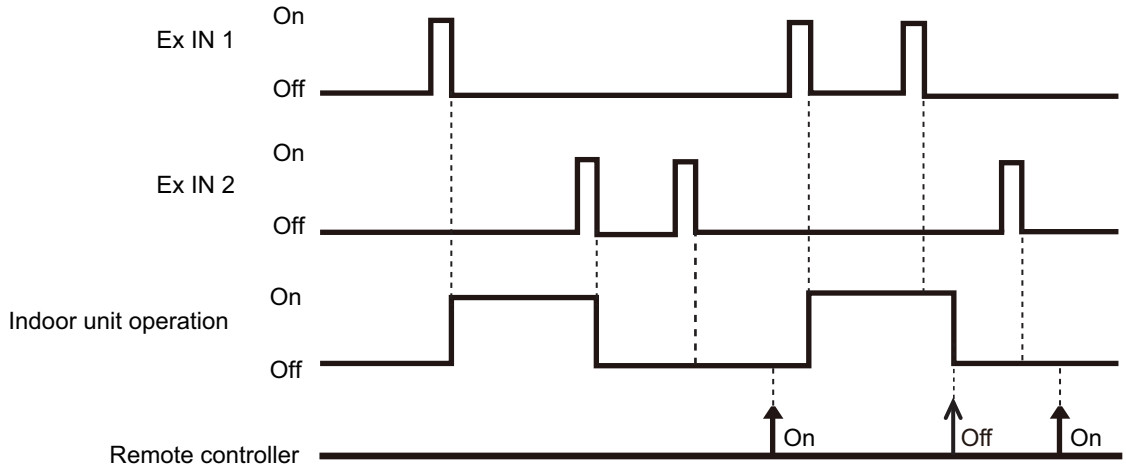

NOTE: When "Operation/Stop" mode 2 function is used with forming a remote controller group, connect the same equipment to each indoor unit within the group.

4-5 UNIT
MULTI-SPLIT TYPE

● Forced thermostat off

External Input and Output PCB	External input		Input signal	Command
Rotary switch				
2, B, C, D	External Input and Output PCB	Ex IN 1	Off → On	Thermostat off
			On → Off	Normal operation

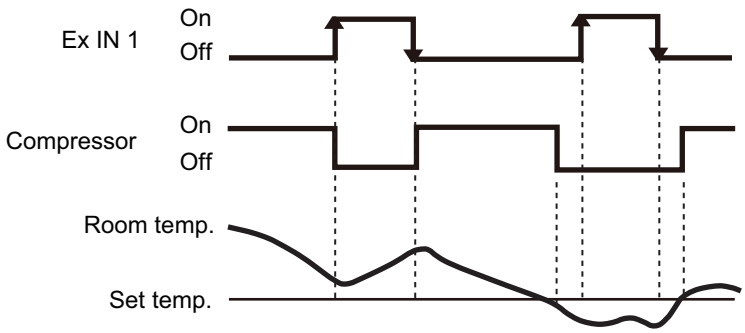

■ Details of control output function

● Operation status

Function setting	External Input and Output PCB / Rotary switch	External output		Output signal	Status
60-00	—	Output of indoor unit	CN47	Off → On	Operation
				On → Off	Stop
—	1, B, C, D	External Input and Output PCB	Ex OUT 1	Off → On	Operation
				On → Off	Stop

The output is low when the unit is stopped.

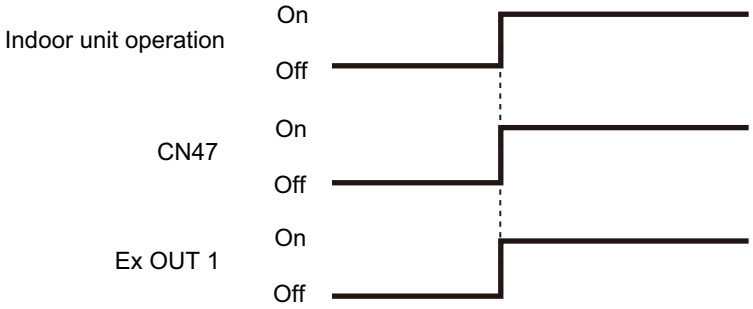

● Error status

Function setting	External Input and Output PCB / Rotary switch	External output		Output signal	Status
60-09	—	Output of indoor unit	CN47	Off → On	Error
				On → Off	Normal
—	2	External Input and Output PCB	Ex OUT 1	Off → On	Error
				On → Off	Normal
—	1, C	External Input and Output PCB	Ex OUT 2	Off → On	Error
				On → Off	Normal
—	D	External Input and Output PCB	Ex OUT 3	Off → On	Error
				On → Off	Normal

The output is on when an error is generated for the indoor unit.

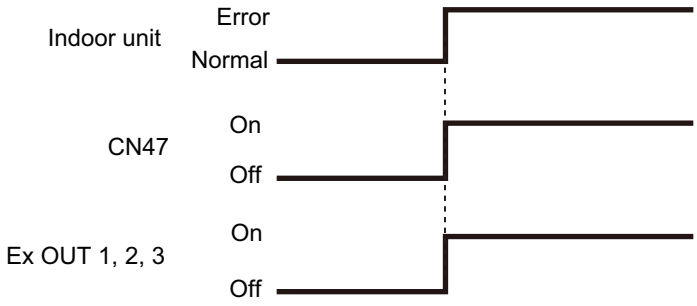

4-5 UNIT MULTI-SPLIT TYPE

● Indoor unit fan operation status

Function setting	External Input and Output PCB / Rotary switch	External output		Output signal	Status
60-10	—	Output of indoor unit	CN47	Off → On	Fan run
				On → Off	Fan stop
—	2, B, D	External Input and Output PCB	Ex OUT 2	Off → On	Fan run
				On → Off	Fan stop
—	1	External Input and Output PCB	Ex OUT 3	Off → On	Fan run
				On → Off	Fan stop

Output signal	Condition
On	The indoor unit fan is operating.
Off	The fan is stopped or during cold air prevention. During thermostat off when in dry mode operation.

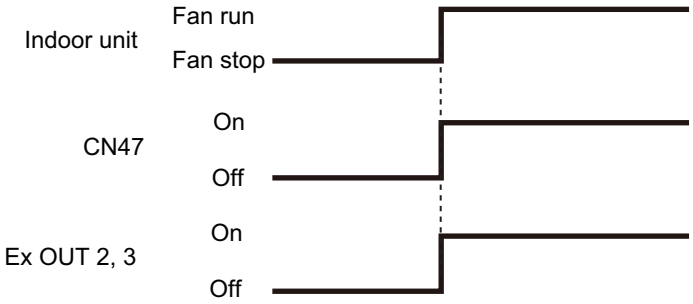

12-2. Mini duct type, Slim duct type, and Medium static pressure duct type (ARXG22KMLB)

Exterior of the indoor unit PCB and the component location differ by the type of the indoor unit as follows.

- **Mini duct type, Slim duct type, and Medium static pressure duct types :**

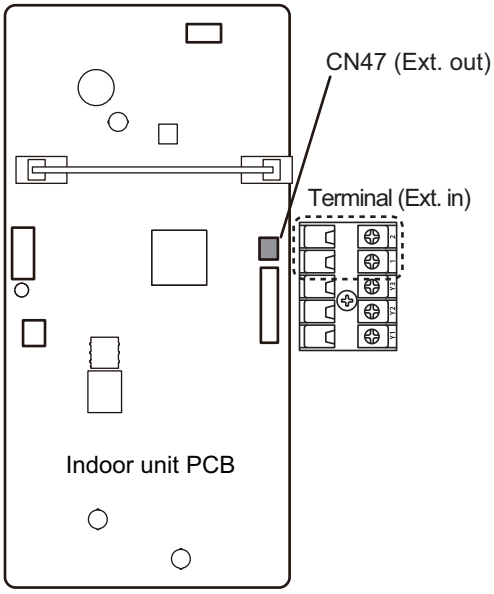

External input and output		Connector	Input select	Input signal	External connect kit (Optional parts)
External input	Operation/Stop Forced stop	Terminal	Dry contact	Edge	—
External output	Operation status	CN47	—	—	UTY-XWZXZG
	Error status				
	Indoor unit fan operation status				
	External heater output				

4-5 UNIT MULTI-SPLIT TYPE

■ External input

With using external input function, some functions on this product can be controlled from an external device.

- “Operation/Stop” mode or "Forced stop" mode can be selected with function setting of indoor unit.
- A twisted pair cable (22AWG) should be used. Maximum length of cable is 150 m.
- The wire connection should be separate from the power cable line.

Indoor unit functions such as Operation/Stop can be done by using indoor unit terminals.

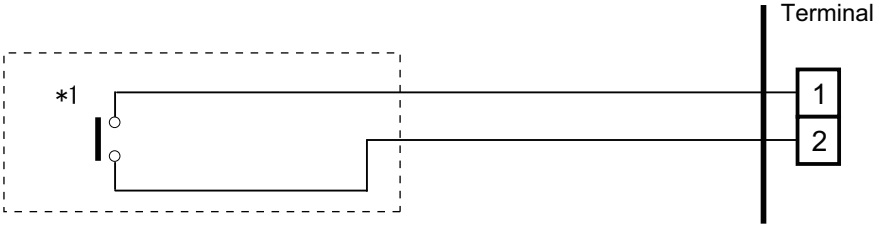

*1: The switch can be used on the following condition: DC 12 V to 24 V, 1 mA to 15 mA.

■ External output

Use an external output cable with appropriate external dimension, depending on the number of cables to be installed.

- A twisted pair cable (22AWG) should be used. Maximum length of cable is 25 m.
- Output voltage: High DC 12 V ± 2 V, Low 0 V.
- Permissible current: 50 mA
- For details, refer to "Combination of external input and output" on page 200.

● When indicator, etc. are connected directly

Example: Function setting 60 is set to "00"

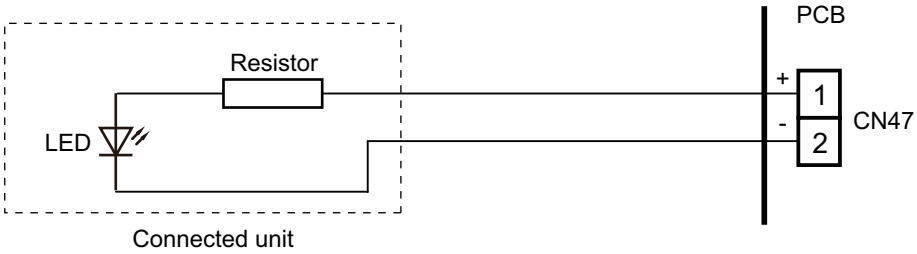

● When connecting with a device equipped with a power supply

Example: Function setting 60 is set to "00"

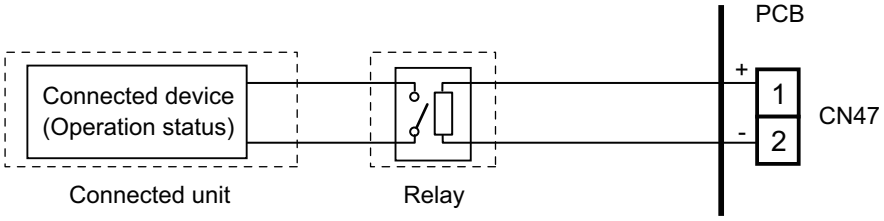

4-5 UNIT
MULTI-SPLIT TYPE

■ Combination of external input and output

By combining the function setting of the indoor unit, you can select various combinations of functions.

Combination examples of external input and output are as follows:

Mode	Function setting	External input	External output
		Terminal	CN47
0	60—00	Operation/Stop	
1—8	60—01 to 60—08	(Setting prohibited)	
9	60—09	Operation/Stop	Error status
10	60—10	Operation/Stop	Indoor unit fan operation status
11	60—11	Operation/Stop	External heater output

NOTE: Input of Operation/Stop depends on the setting of function setting 46.

- 00: Operation/Stop mode 1 (Remote controller enabled)
- 01: (Setting prohibited)
- 02: Forced stop
- 03: Operation/Stop mode 2 (Remote controller disabled)

● Input signal type

- Indoor unit
  Input signal type is only "Edge".

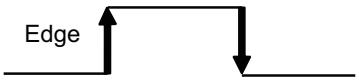

■ Details of function

● Control input function

- **When function setting is "Operation/Stop" mode 1**

Function setting	External input	Input signal	Command
46—00	Terminal	Off → On	Operation
		On → Off	Stop

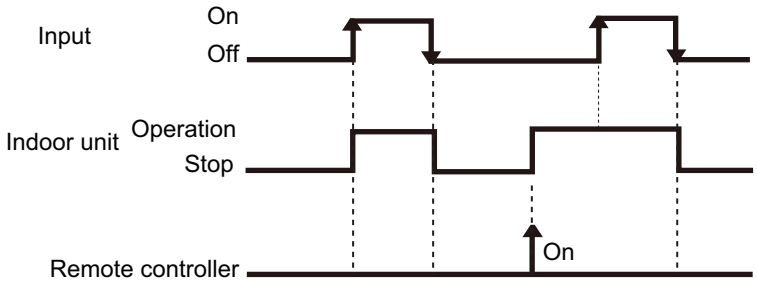

NOTES:

- The last command has priority.
- The indoor units within the same remote controller group operates in the same mode.

- **When function setting is "Forced stop" mode**

Function setting	External input	Input signal	Command
46—02	Terminal	Off → On	Forced stop
		On → Off	Normal

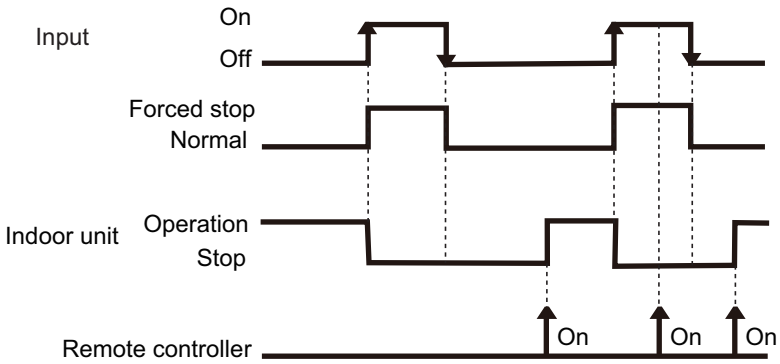

NOTES:

- When the forced stop is triggered, indoor unit stops and Operation/Stop operation by the remote controller is restricted.
- When forced stop function is used with forming a remote controller group, connect the same equipment to each indoor unit within the group.

- **When function setting is "Operation/Stop" mode 2**

Function setting	External input	Input signal	Command
46—03	Terminal	Off → On	Operation
		On → Off	Stop (Remote controller disabled)

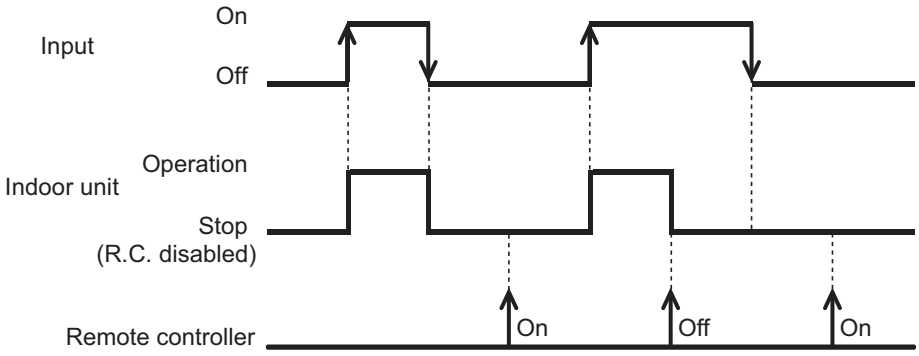

NOTE: When "Operation/Stop" mode 2 function is used with forming a remote controller group, connect the same equipment to each indoor unit within the group.

● Control output function

Function setting	External output	Output signal	Command
60—00	CN47	Low → High	Operation
		High → Low	Stop

The output is low when the unit is stopped.

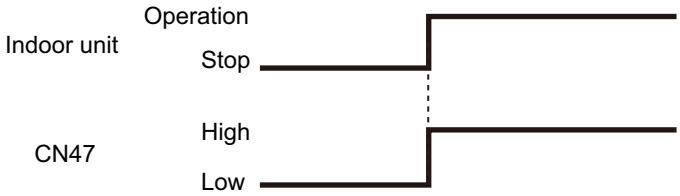

● Error status

Function setting	External output	Output signal	Command
60—09	CN47	Low → High	Error
		High → Low	Normal

The output is ON when an error is generated for the indoor unit.

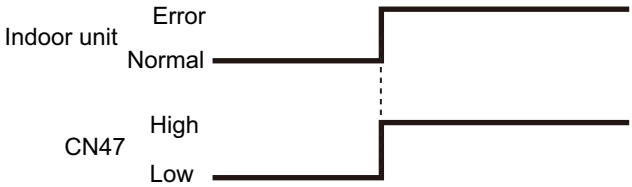

4-5 UNIT MULTI-SPLIT TYPE

● Indoor unit fan operation status

Function setting	External output	Output signal	Command
60—10	CN47	Low → High	Fan run
		High → Low	Fan stop

Output signal	Condition
On	The indoor unit fan is operating.
Low → High	
Off	The fan is stopped or during cold air prevention. During thermostat off when in dry mode operation.
High → Low	

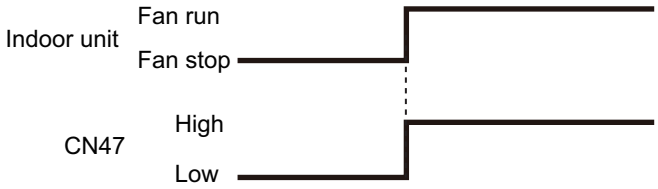

● External heater output

Function setting	External output	Output signal	Command
60—11	CN47	Low → High	Heater on
		High → Low	Heater off

Output signal	Condition
Low → High	Heater turns on as shown in diagram of heating temperature
Off → On	
High → Low	Heater turns off as shown in diagram of heating temperature • Other than Heating mode • Error occurred • Forced thermo off • Fan stop protection
On → Off	

Specifications of the signal output performance are as shown as follows:

Example When set temperature (Ts) is set at 22 °C;

- And room temperature (Tr) increase above 12 °C, signal output is on.
- And Tr increase above 21 °C, signal output is off.
- And Tr decrease below 19 °C, signal output is on.
- And Tr decrease below 10 °C, signal output is off.

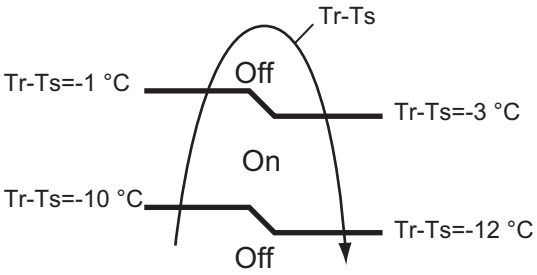

The output also turns off in defrost operation.

12-3. Wall mounted type (KMCG, KMCG-B, KETF, KETF-B, KGTG, and KMTE)

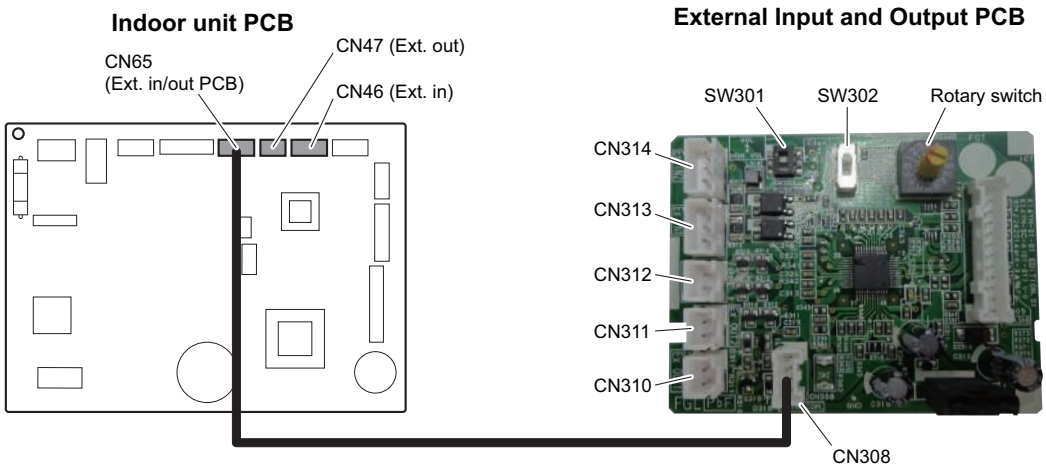

PCB	External input	External output	Connector	Input select	Input signal
Indoor unit	Operation/Stop	—	CN46	Dry contact	Edge
	Forced stop				
	—	Operation status	CN47	—	—
		Error status			
		Indoor unit fan operation status			
External Input and Output PCB (UTY-XCSXZ2)	Operation/Stop	—	CN313/ CN314	Dry contact/ Apply voltage	Edge/Pulse
	Forced stop				
	Forced thermostat off		CN313		Edge
	—	Operation status	CN310/ CN311/ CN312	—	—
		Error status			
		Indoor unit fan operation status			

4-5 UNIT
MULTI-SPLIT TYPE

■ External input

With using external input function, some functions on this product can be controlled from an external device.

- “Operation/Stop” mode or "Forced stop" mode can be selected with function setting of indoor unit.
- A twisted pair cable should be used. Maximum length of cable is 150 m.
- The wire connection should be separate from the power cable line.

● Indoor unit

Indoor unit functions such as Operation/Stop can be done by using indoor unit connectors.

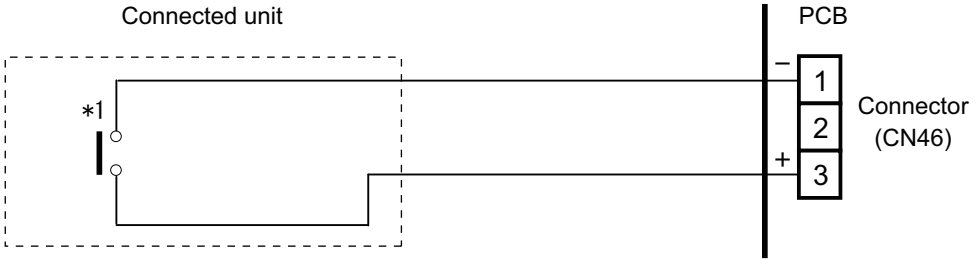

*1: The switch can be used on the following condition: DC 12 V to 24 V, 1 mA to 15 mA.

4-5 UNIT
MULTI-SPLIT TYPE

● External Input and Output PCB

The indoor unit Operation/Stop can be set by using the input connector on the PCB.

- **Input select:**
  Use either one of these types of connectors according to the application. (Both types of connectors cannot be used simultaneously.)
  - Dry contact
    In case of internal power supply, set the slide switch of SW301 to "NON VOL" side.

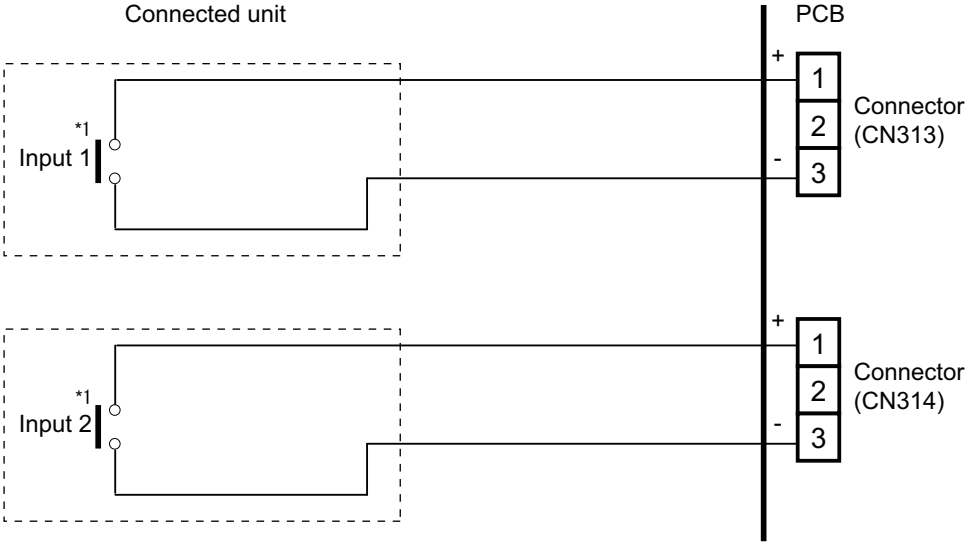

*1: The switches can be used on the following condition: DC 12 V to 24 V, 1 mA to 15 mA.

  - Apply voltage
    In case of external power supply, set the slide switch of SW301 to "VOL" side.

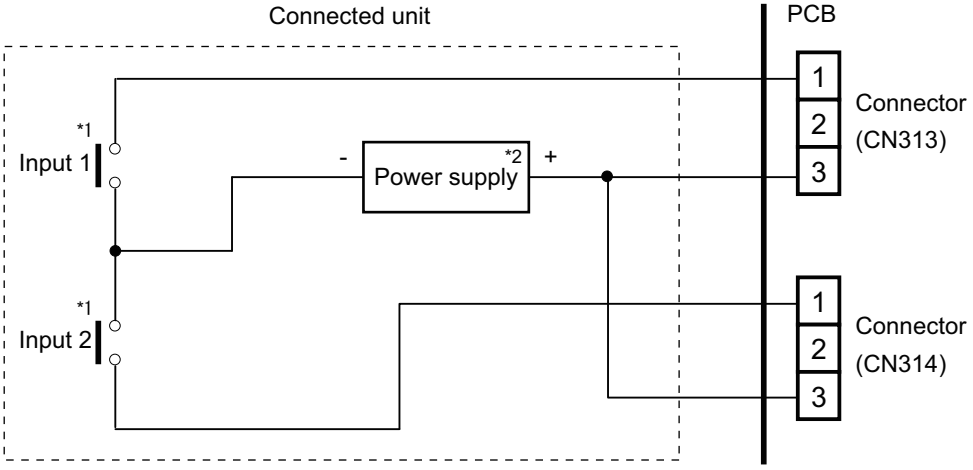

*1: The switches can be used on the following condition: DC 12 V to 24 V, 1 mA to 15 mA.
*2: Make the power supply DC 12 to 24 V, 10 mA or more.

4-5 UNIT MULTI-SPLIT TYPE

■ External output

Use an external output cable with appropriate external dimension, depending on the number of cables to be installed.

● Indoor unit

- A twisted pair cable should be used. Maximum length of cable is 25 m.
- Output voltage: High DC 12 V ± 2 V, Low 0 V.
- Permissible current: 50 mA
- For details, refer to "Combination of external input and output" on page 209

● When indicator or other components are connected directly

Example: Function setting 60 is set to "00"

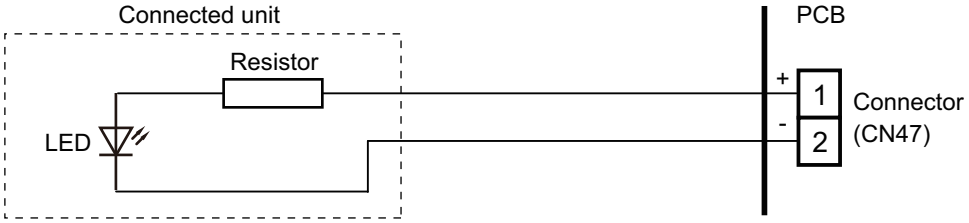

● When connecting with a device equipped with a power supply

Example: Function setting 60 is set to "00"

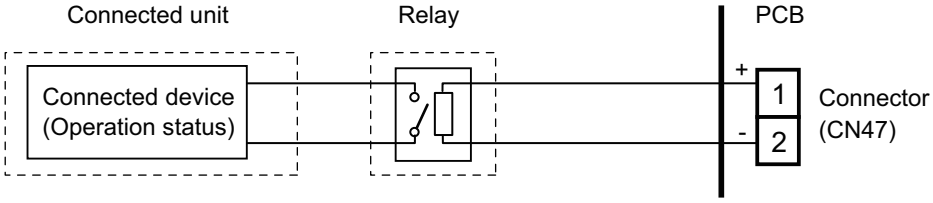

4-5 UNIT
MULTI-SPLIT TYPE

● External Input and Output PCB

- A twisted pair cable should be used. Maximum length of cable is 25 m.
- Output voltage: High DC 12 V±2 V, Low 0 V.
- Permissible current: 50 mA
- For details, refer to "Combination of external input and output" on page 209

- **When indicator or other components are connected directly:**
  Example: Rotary SW on External Input and Output PCB is set to “1”.

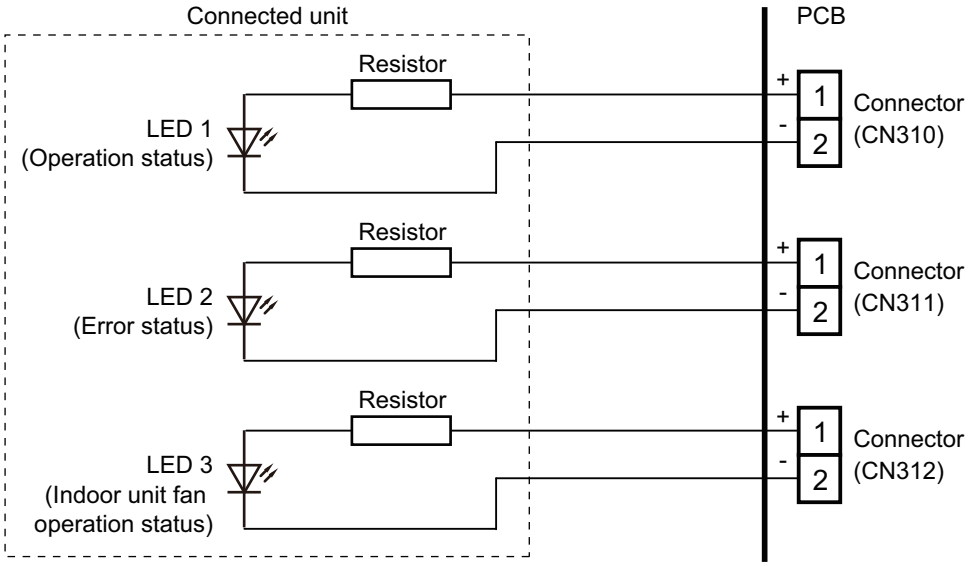

- **When connecting with a device equipped with a power supply:**
  Example: Rotary SW on External Input and Output PCB is set to “1”.

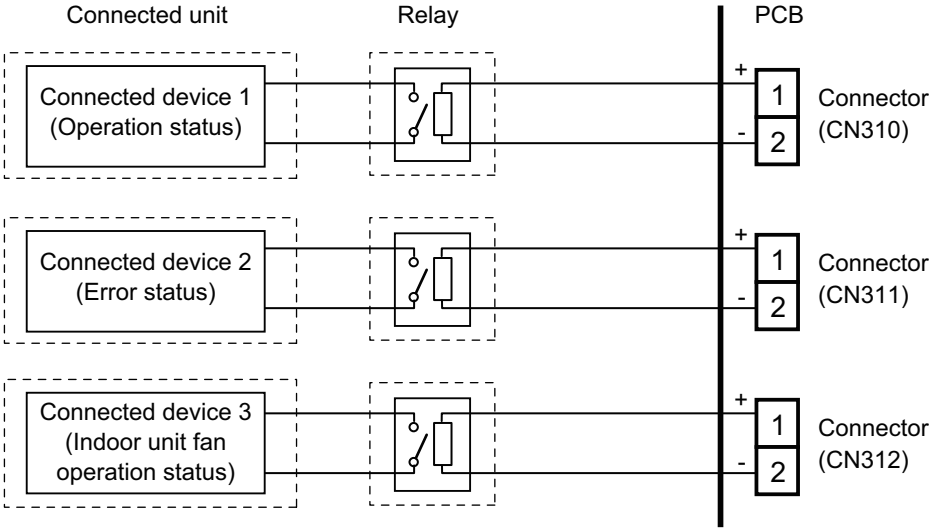

4-5 UNIT MULTI-SPLIT TYPE

■ Combination of external input and output

By combining the function setting of the indoor unit and rotary switch setting of the External Input and Output PCB, you can select various combinations of functions.

Combination examples of external input and output are as follows:

<table>
<tr><th rowspan="3">Mode</th><th rowspan="3">Function setting</th><th rowspan="3">Rotary SW</th><th colspan="3">External input</th></tr>
<tr><th>Indoor unit</th><th colspan="2">External Input and Output PCB</th></tr>
<tr><th>CN46</th><th>CN313</th><th>CN314</th></tr>
<tr><td rowspan="2">0-1</td><td rowspan="2">60—00</td><td rowspan="2">1</td><td rowspan="4">Operation/Stop mode1
(Function setting 46-00)
or
Forced stop
(Function setting 46-02)
or
Operation/Stop mode2
(Function setting 46-03)</td><td>Operation/Stop</td><td>Not available</td></tr>
<tr><td>Operation</td><td>Stop</td></tr>
<tr><td>0-2</td><td>60-00</td><td>2</td><td>Forced thermostat OFF</td><td>Not available</td></tr>
<tr><td>1—8</td><td>60-01—08</td><td>3—9, A</td><td colspan="3">(Setting prohibited)</td></tr>
<tr><td>9</td><td>60-09</td><td>B</td><td rowspan="2">Operation/Stop mode1
(Function setting 46-00)
or
Forced stop
(Function setting 46-02)
or
Operation/Stop mode2
(Function setting 46-03)</td><td rowspan="2">Forced thermostat OFF</td><td rowspan="2">Not available</td></tr>
<tr><td>10</td><td>60-10</td><td>C</td></tr>
<tr><td>11</td><td>60-11</td><td>D</td><td colspan="3">(Setting prohibited)</td></tr>
</table>

<table>
<tr><th rowspan="3">Mode</th><th rowspan="3">Function setting</th><th rowspan="3">Rotary SW</th><th colspan="4">External output</th></tr>
<tr><th>Indoor unit</th><th colspan="3">External Input and Output PCB</th></tr>
<tr><th>CN47</th><th>CN310</th><th>CN311</th><th>CN312</th></tr>
<tr><td>0-1</td><td>60-00</td><td>1</td><td>Operation/Stop</td><td>Operation/Stop</td><td>Error status</td><td>Indoor unit fan operation status</td></tr>
<tr><td>0-2</td><td>60-00</td><td>2</td><td>Operation/Stop</td><td>Error status</td><td>Indoor unit fan operation status</td><td>Not available</td></tr>
<tr><td>1—8</td><td>60-01—08</td><td>3—9, A</td><td colspan="4">(Setting prohibited)</td></tr>
<tr><td>9</td><td>60-09</td><td>B</td><td>Error status</td><td rowspan="2">Operation/Stop</td><td>Indoor unit fan operation status</td><td rowspan="2">Not available</td></tr>
<tr><td>10</td><td>60-10</td><td>C</td><td>Indoor unit fan operation status</td><td>Error status</td></tr>
<tr><td>11</td><td>60-11</td><td>D</td><td colspan="4">(Setting prohibited)</td></tr>
</table>

NOTE: Input of Operation/Stop depends on the setting of function setting 46.

00: Operation/Stop mode 1 (Remote controller enabled)

01: (Setting prohibited)

02: Forced stop

03: Operation/Stop mode 2 (Remote controller disabled)

4-5 UNIT
MULTI-SPLIT TYPE

● Input signal type

External Input and Output PCB:

The input signal type can be selected.

Signal type (edge or pulse) can be switched by the DIP switch SW302 on the External Input and Output PCB.

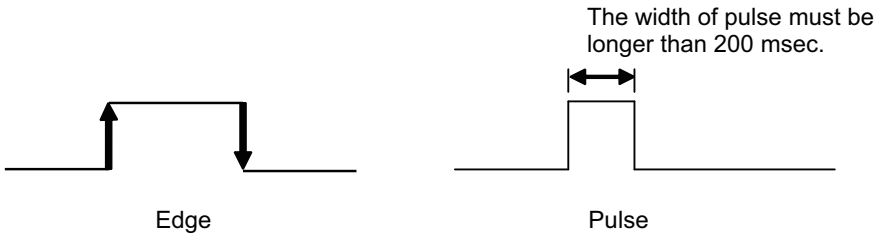

■ Details of function

● Control input function

- **When function setting is “Operation/Stop” mode 1**
  - In the case of “Edge” input:

Function setting	Rotary SW on External Input and Output PCB	External input		Input signal	Command
46-00	1	External Input and Output PCB	CN313	Off → On	Operation
				On → Off	Stop

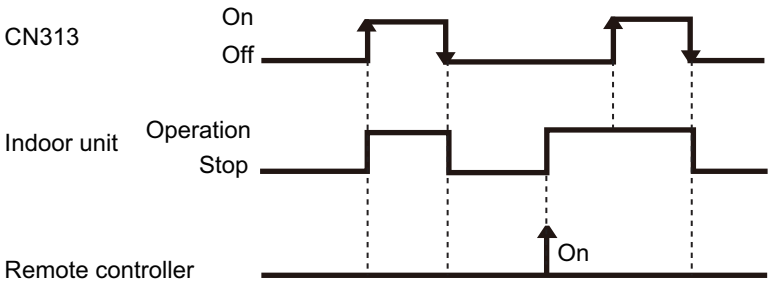

  - In the case of “Pulse” input:

Function setting	Rotary SW on External Input and Output PCB	External input		Input signal	Command
46-00	1	External Input and Output PCB	CN313	Pulse	Operation
			CN314	Pulse	Stop

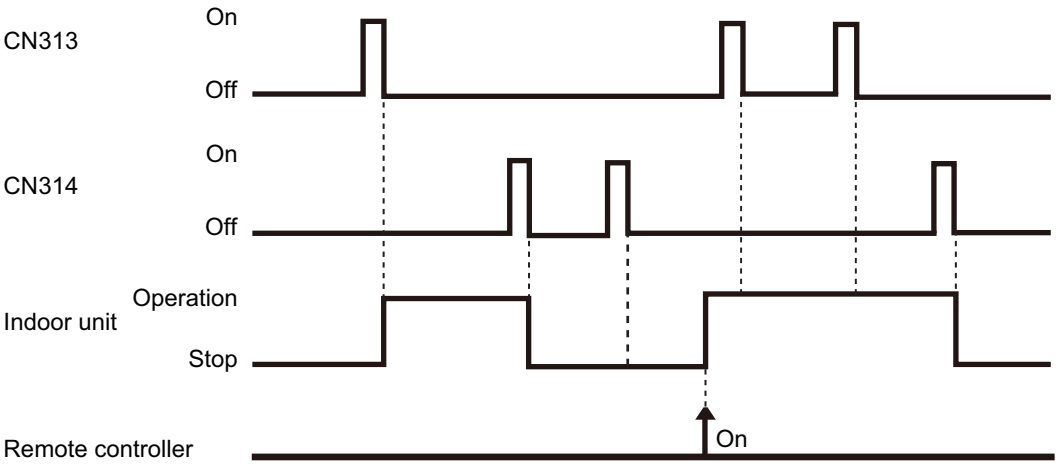

NOTES:

- The last command has priority.
- The indoor units within the same remote controller group operates in the same mode.

- **When function setting is “Forced stop” mode**
  - In the case of “Edge” input:

Function setting	Rotary SW on External Input and Output PCB	External input		Input signal	Command
46-02	1	External Input and Output PCB	CN313	Off → On	Forced stop
				On → Off	Normal

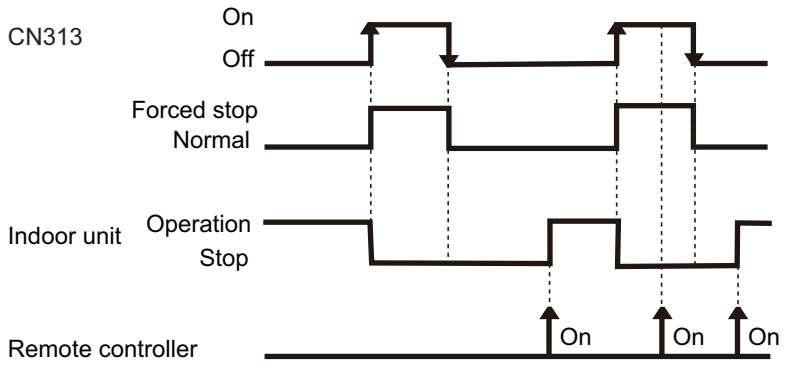

  - In the case of “Pulse” input:

Function setting	Rotary SW on External Input and Output PCB	External input		Input signal	Command
46-02	1	External Input and Output PCB	CN313	Pulse	Forced stop
			CN314	Pulse	Normal

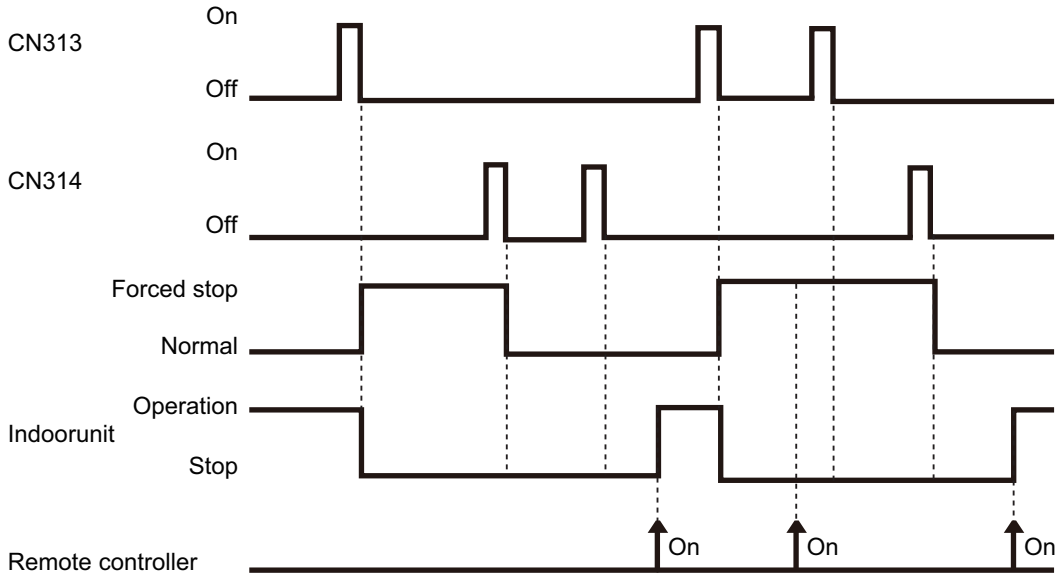

NOTES:

- When the forced stop is triggered, indoor unit stops and Operation/Stop operation by the remote controller is restricted.
- When forced stop function is used with forming a remote controller group, connect the same equipment to each indoor unit within the group.

- **When function setting is “Operation/Stop” mode 2**
  - In the case of “Edge” input:

Function setting	Rotary SW on External Input and Output PCB	External input		Input signal	Command
46-03	1	External Input and Output PCB	CN313	Off → On	Operation
				On → Off	Stop (Remote controller disabled)

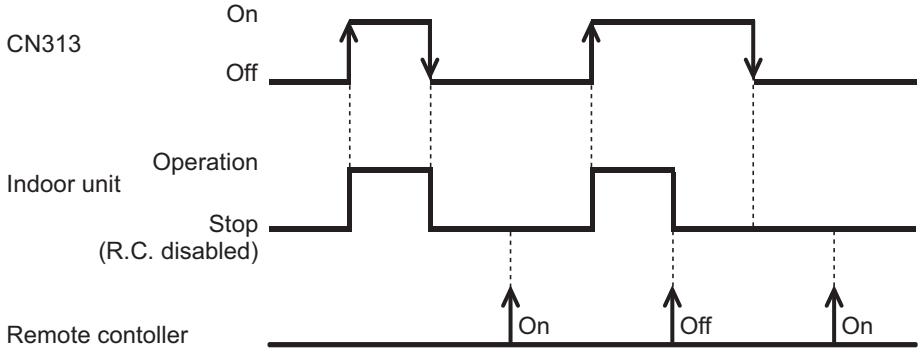

  - In the case of “Pulse” input:

Function setting	Rotary SW on External Input and Output PCB	External input		Input signal	Command
46-03	1	External Input and Output PCB	CN313	Pulse	Operation
			CN314	Pulse	Stop (Remote controller disabled)

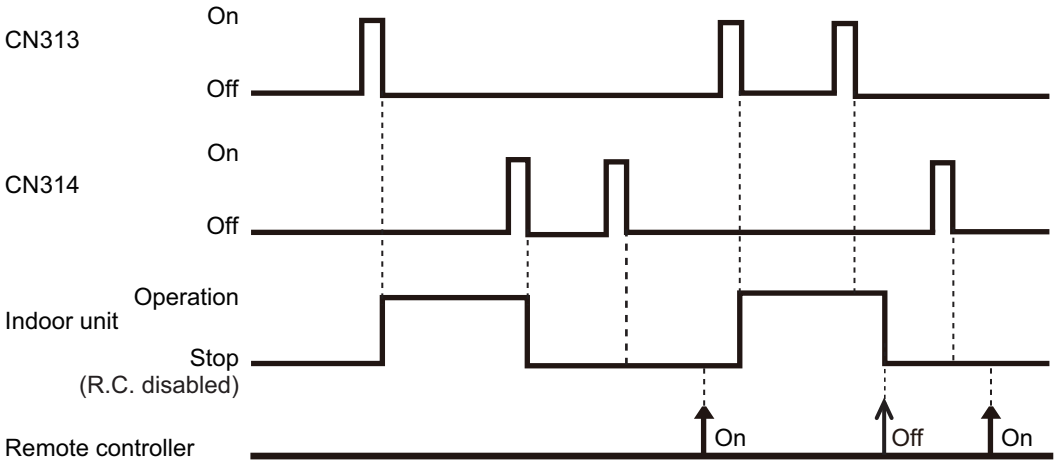

NOTE: When “Operation/Stop” mode 2 function is used with forming a remote controller group, connect the same equipment to each indoor unit within the group.

- **Forced thermostat off function**

Function setting / Rotary SW on External Input and Output PCB	External input		Input signal	Command
60-00 / 2 60-09 / B 60-10 / C	External Input and Output PCB	CN313	Off → On	Thermostat off
			On → Off	Normal operation

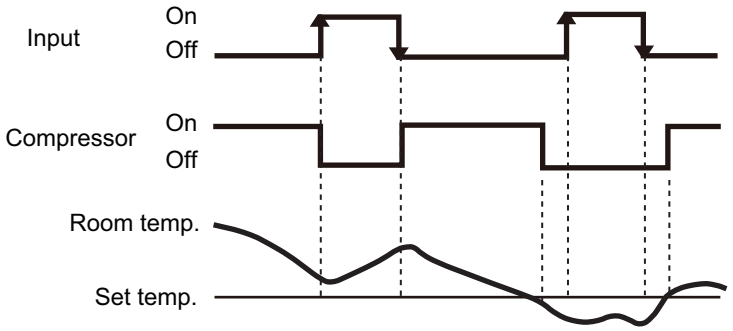

4-5 UNIT MULTI-SPLIT TYPE

● Control output function

- **Operation/Stop status**

Function setting / Rotary SW on External Input and Output PCB	External output		Output signal	Command
60-00 / 1 60-00 / 2	Output of indoor unit	CN47	Off → On	Operation
			On → Off	Stop
60-00 / 1 60-09 / B 60-10 / C 60-11 / D	External Input and Output PCB	CN310	Off → On	Operation
			On → Off	Stop

The output is low when the unit is stopped.

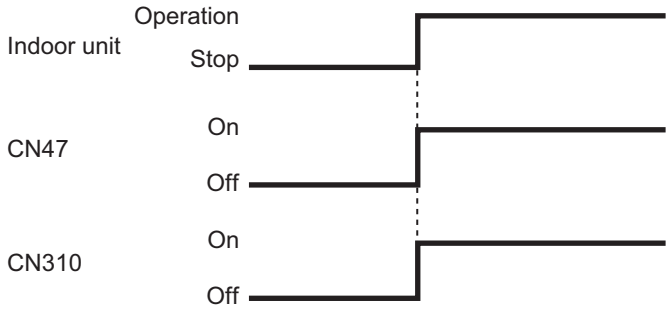

- **Error status**

Function setting / Rotary SW on External Input and Output PCB	External output		Output signal	Command
60-09 / B	Output of indoor unit	CN47	Off → On	Error
			On → Off	Normal
60-00 / 2	External Input and Output PCB	CN310	Off → On	Error
			On → Off	Normal
60-00 / 1 60-10 / C		CN311	Off → On	Error
			On → Off	Normal
60-11 / D		CN312	Off → On	Error
			On → Off	Normal

The output is ON when an error is generated for the indoor unit.

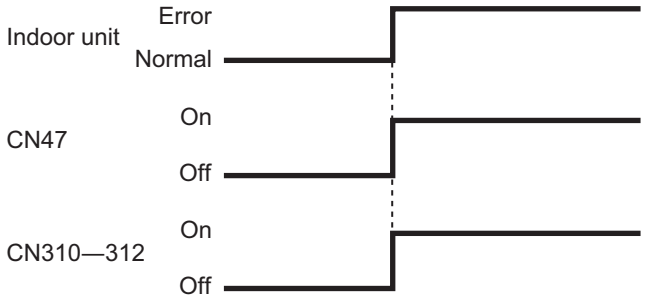

4-5 UNIT MULTI-SPLIT TYPE

- **Indoor unit fan operation status**

Function setting / Rotary SW on External Input and Output PCB	External output		Output signal	Command
60-10 / C	Output of indoor unit	CN47	Off → On	Fan run
			On → Off	Fan stop
60-00 / 2 60-09 / B 60-11 / D	External Input and Output PCB	CN311	Off → On	Fan run
			On → Off	Fan stop
60-00 / 1		CN312	Off → On	Fan run
			On → Off	Fan stop

Output signal	Condition
On Low → High	The indoor unit fan is operating.
Off High → Low	The fan is stopped or during cold air prevention. During thermostat off when in dry mode operation.

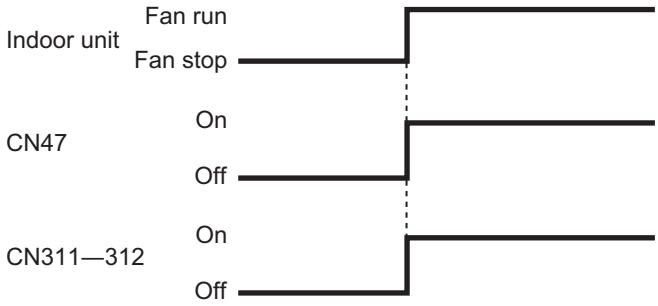

12-4. Floor type

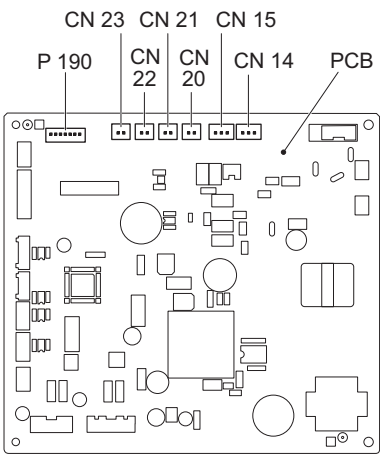

PCB	External input	External output	Connector	Input signal
Indoor unit	Operation/Stop	—	CN14	Edge
	Forced stop			
	Forced thermostat off		CN15	
	—	Operation status	CN20/CN21/ CN22/CN23	—
		Error status		
		Indoor unit fan operation status		
		External heater output		

■ External input

With using external input function, some functions on this product can be controlled from an external device.

- “Operation/Stop” mode can be selected with function setting of indoor unit.
- A twisted pair cable (22AWG) should be used. Maximum length of cable is 150 m.
- The wire connection should be separate from the power cable line.

● Indoor unit

Indoor unit functions such as Operation/Stop can be done by using indoor unit connectors.

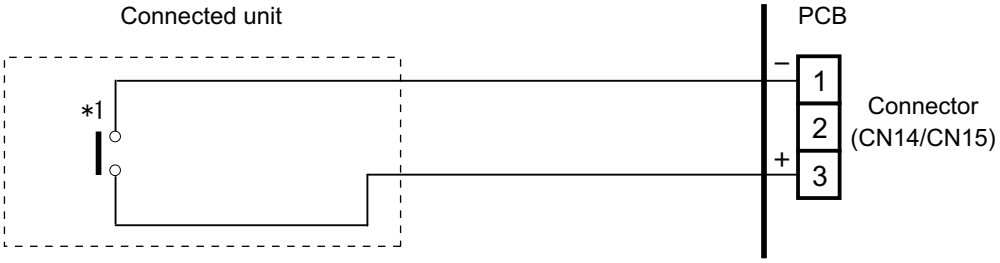

*1: The switch can be used on the following condition: DC 12 V to24 V,1 mA to15 mA.

4-5 UNIT MULTI-SPLIT TYPE

■ External output

Use an external output cable with appropriate external dimension, depending on the number of cables to be installed.

● Indoor unit

- A twisted pair cable (22AWG) should be used. Maximum length of cable is 25 m .
- Output voltage: High DC 12 V ±2 V,Low 0 V.
- Permissible current: 50 mA
- For details, refer to Chapter 12-4-3. "Combination of external input and output" on page 219.

● When indicator or other components are connected directly

Example: Function setting 60 is set to "00"

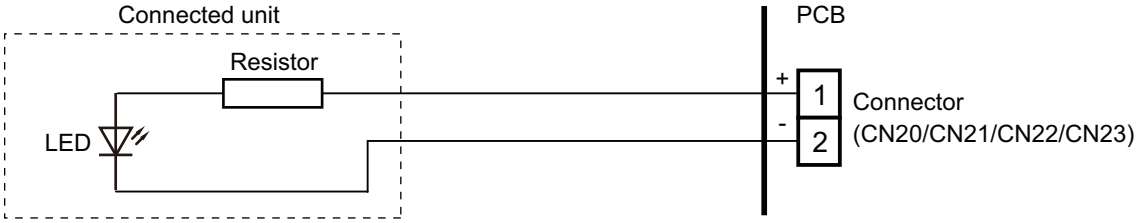

● When connecting with a device equipped with a power supply

Example: Function setting 60 is set to "00"

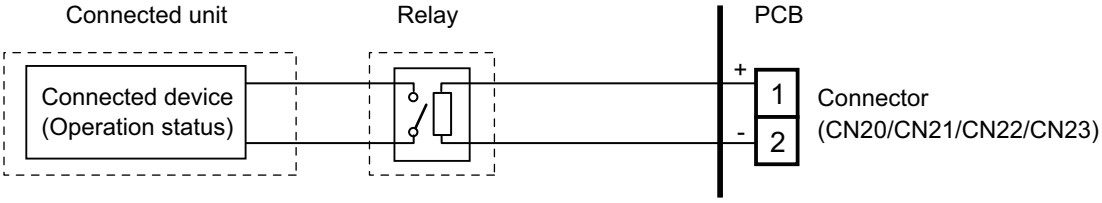

4-5 UNIT MULTI-SPLIT TYPE

■ Combination of external input and output

By combining the function setting of the indoor unit, you can select various combinations of functions.

Combination examples of external input and output are as follows:

Mode	Function setting	External input	
		Indoor unit	
		CN14	CN15
0	60-00	Operation/Stop (Function setting 46-00) or Forced stop (Function setting 46-02)	Forced thermostat Off
9	60-09		Forced thermostat Off
10	60-10		Forced thermostat Off
11	60-11		Forced thermostat Off
12	60-12		Forced thermostat Off

Mode	Function setting	External output			
		Indoor unit			
		CN20	CN21	CN22	CN23
0	60-00	Operation/Stop	Error status	Indoor unit fan operation status	External heater output
9	60-09	Error status	Operation/Stop	Indoor unit fan operation status	External heater output
10	60-10	Indoor unit fan operation status	Operation/Stop	Error status	External heater output
11	60-11	External heater output	Operation/Stop	Indoor unit fan operation status	Error status

NOTE: Input of Operation/Stop depends on the settingof function setting 46.
00: Operation/Stop mode 1 (Remote controller enabled)
01:(Setting prohibited)
02: Forced stop
03: Operation/Stopmode 2 (Remote controller disabled)

● Input signal type

- **Indoor unit**
  Input signal type is only "Edge".

■ Details of function

● Control input function

- **When function setting is "Operation/Stop" mode 1**
  - **In the case of "Edge" input**

Mode	Function setting		External input		Input signal	Command
0	46-00	—	Input of indoor unit	CN14	Off → On	Operation
					On → Off	Stop
		60-00		CN15	Off → On	Operation
					On → Off	Stop

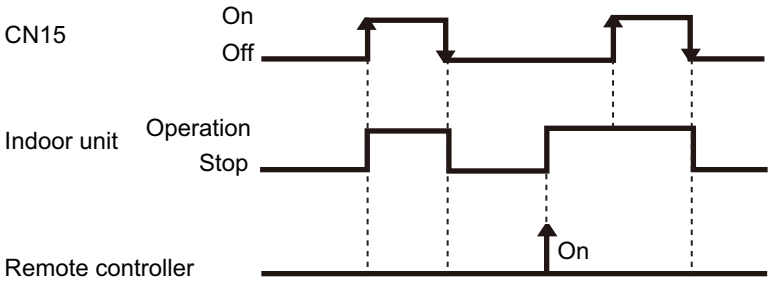

- **When function setting is "Forced stop" mode**
  - **In the case of "Edge" input**

Mode	Function setting		External input		Input signal	Command
0	46-02	—	Input of indoor unit	CN14	Off → On	Forced stop
					On → Off	Normal
		60-00		CN15	Off → On	Forced stop
					On → Off	Normal

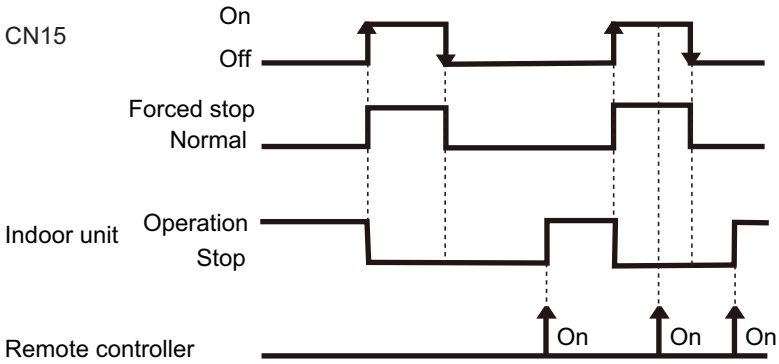

- **When function setting is "Operation/Stop"mode 2**
  - **In the case of "Edge" input**

Mode	Function setting		External input		Input signal	Command
0	46-03	—	Input of indoor unit	CN14	Off → On	Operation
					On → Off	Stop (Remote controller disabled)
		60-00		CN15	Off → On	Operation
					On → Off	Stop (Remote controller disabled)

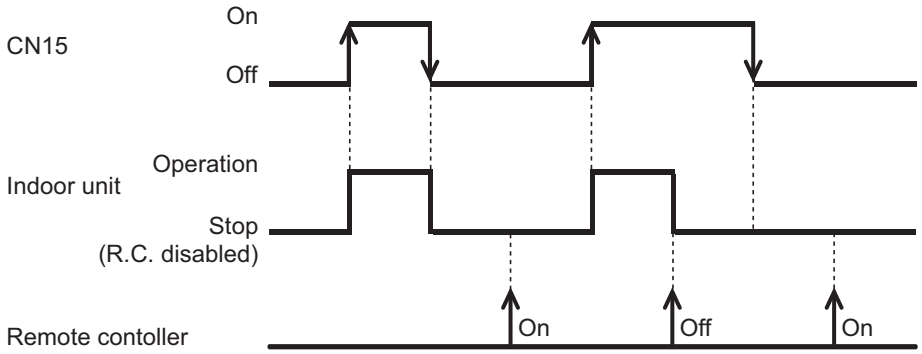

4-5 UNIT MULTI-SPLIT TYPE

● Control output function

- **Operation/Stop status**

Mode	Function setting	External output		Output signal	Command
0	60-00	Output of indoor unit	CN15	Low → High	Operation
				High → Low	Stop
0	60-00		CN20	Off → On	Operation
				On → Off	Stop

The output is low when the unit is stopped.

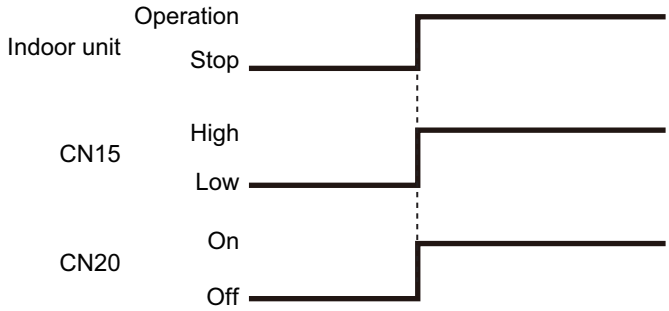

- **Error status**

Mode	Function setting	External output		Output signal	Command
9	60-09	Output of indoor unit	CN15	Low → High	Error
				High → Low	Normal
0	60-00		CN21	Off → On	Error
				On → Off	Normal

The output is ON when an error is generated for the indoor unit.

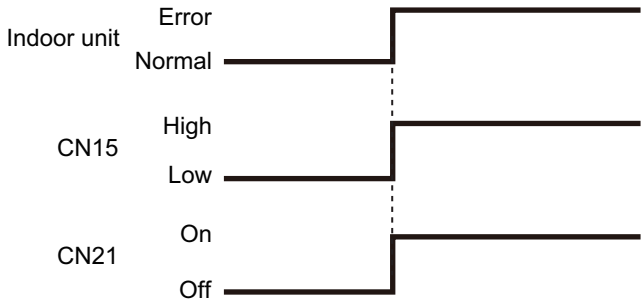

- **Indoor unit fan operation status**

Mode	Function setting	External output		Output signal	Command
10	60-10	Output of indoor unit	CN15	Low → High	Fan run
				High → Low	Fan stop
0	60-00		CN22	Off → On	Fan run
				On → Off	Fan stop

Output signal	Condition
On Low → High	The indoor unit fan is operating.
Off High → Low	The fan is stopped or during cold air prevention. During thermostat off when in dry mode operation.

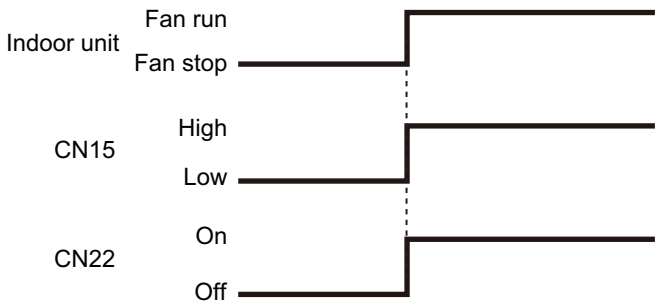

- **Setpoint Attainment status**

NOTE: This function is valid only when function setting 96 is set to “01” (Primary unit) or “02” (Secondary unit).

When the room temperature does not reach the setpoint at a room due to the lower cooling performance caused by external factor such as the outdoor temperature change, signal is output to tell the attainment status of setpoint.

Mode	Function setting	External output		Output signal	Command
12	60-12	Outputof indoor unit	CN15	On → Off	Normal
				Off → On	Setpoint Attainment

Output signal	Condition
Off	Reached the setpoint. (Tr≤ Tsα + 0.5°C)
On	Unreached the setpoint. (Tr> Tsα + 2.5°C) However, even if the setpoint unreached,the signal will not be output for 7 minutes after power is turned on.

When performing the server room control, both of the primary unit and secondary unit output the setpoint attainment status if any of the unit is outputting alternative operation command.

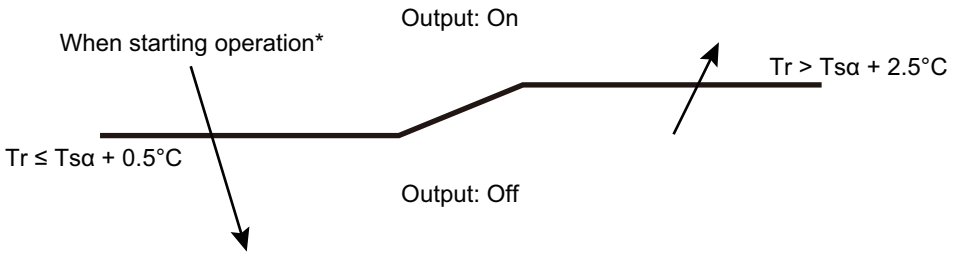

*: When starting operation or resetting, judges the zone to descending direction.

4-5 UNIT
MULTI-SPLIT TYPE

● External heater output

- **Installation configuration of individual connection**
  External heating device is installed individually. (No use of indoor unit fan)

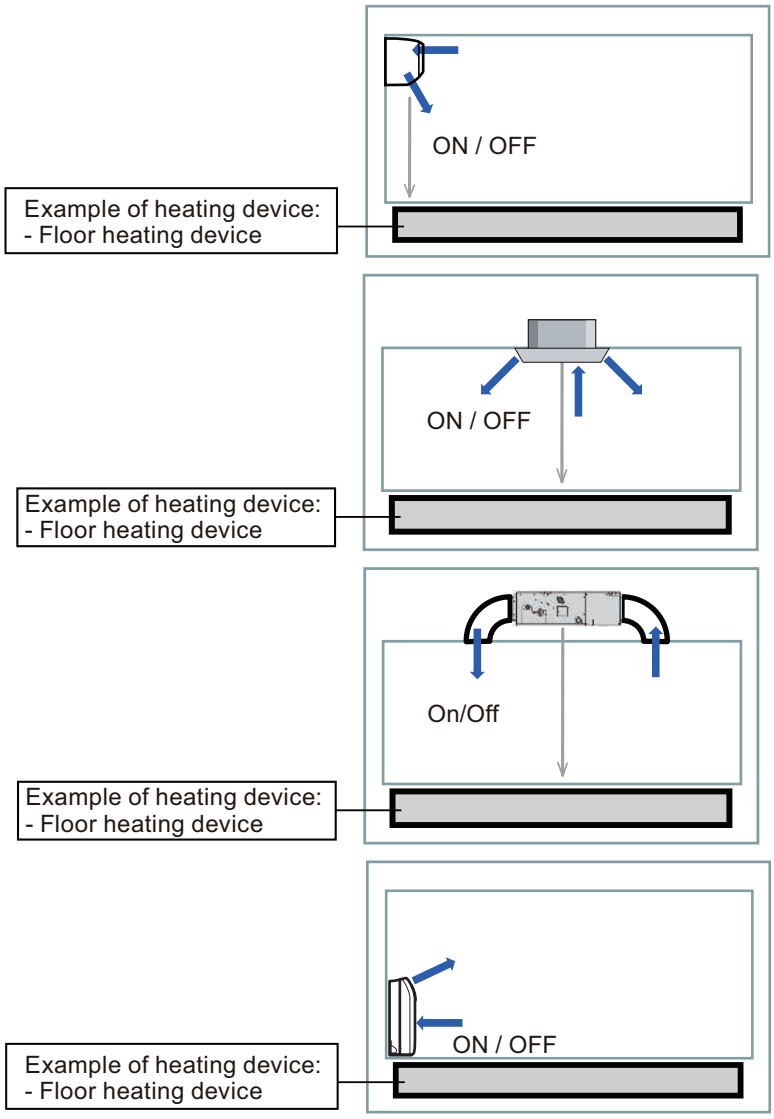

⚠ WARNING

- Design and install external heater appropriately with considering its protection.
- Inappropriate designing and installation of external heater may cause a fire by emitted heat from the external heater.
- Fujitsu General Ltd. is not responsible for inappropriate designing or installation of external heating device.

- **Auxiliary heater control 1**

Operation	Condition
Heater on	Heater is on as shown in following diagram of heating temperature.
Heater off	• Heater is off as shown in following diagram of heating temperature. • Other than heating mode • Error occurred • Forced thermostat off • Fan stop protection

– Temperature of heater on (Thon): Adjustable by function number 62 (Operating temperature switching of external heaters).
– All control temperatures will shift by adjusting “Thon”.

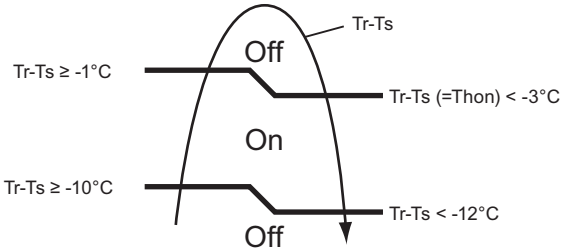

Tr: Room temperature
Ts: Set temperature
Thon: Heater on temperature

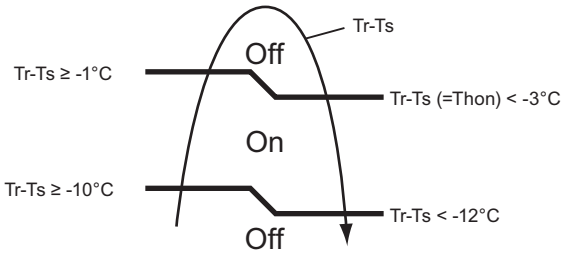

Tr: Room temperature
Ts: Set temperature
Thon: Heater on temperature

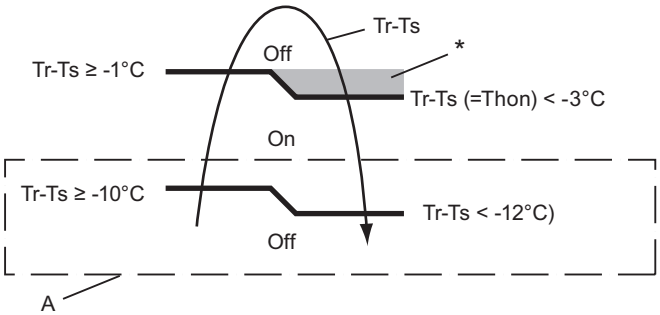

Tr: Room temperature
Ts: Set temperature
Thon: Heater on temperature

*: When room temperature stays in this zone for a specific time, auxiliary heater is turned on. For details, refer to function number 71.

Example: When set temperature (Ts) is 22°C (Factory setting),
– and room temperature (Tr) increases above 12°C, signal output is on.
– and room temperature (Tr) increases above 21°C, signal output is off.
– and room temperature (Tr) decreases below 19°C, signal output is on.
– and room temperature (Tr) decreases below 10°C, signal output is off.

13. Group connection

NOTE: Group control cannot be used together with WLAN Adapter.

Installation procedure for group control system:

A number of indoor units can be operated at the same time using a single remote controller.

NOTE: When different type of indoor units (such as wall mounted type and cassette type, cassette type and duct type, or other combinations) are connected using group control system, some functions may no longer be available.

1. Connect up to 16 indoor units in a system.

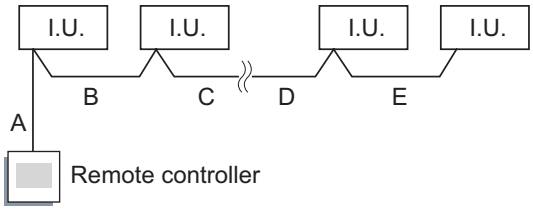

A, B, C, D, E: Remote controller cable		
Wiring length limitation	UTY-RVRY	A + B + C + D + E ≤ 70 m
	Other than UTY-RVRY	A + B + C + D + E ≤ 500 m

Example of wiring method

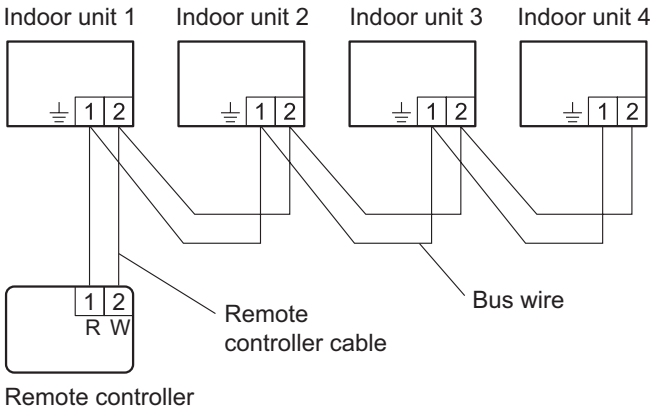

Example of wiring method

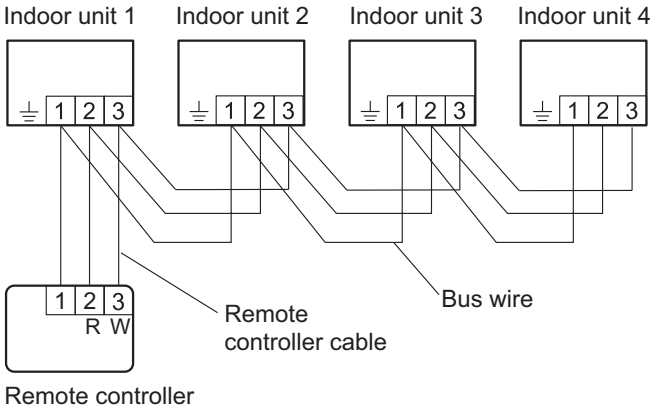

14. Remote controller

14-1. Wireless remote controller (AR-REW4E and AR-REJ1E)

■ Overview

AR-REW4E

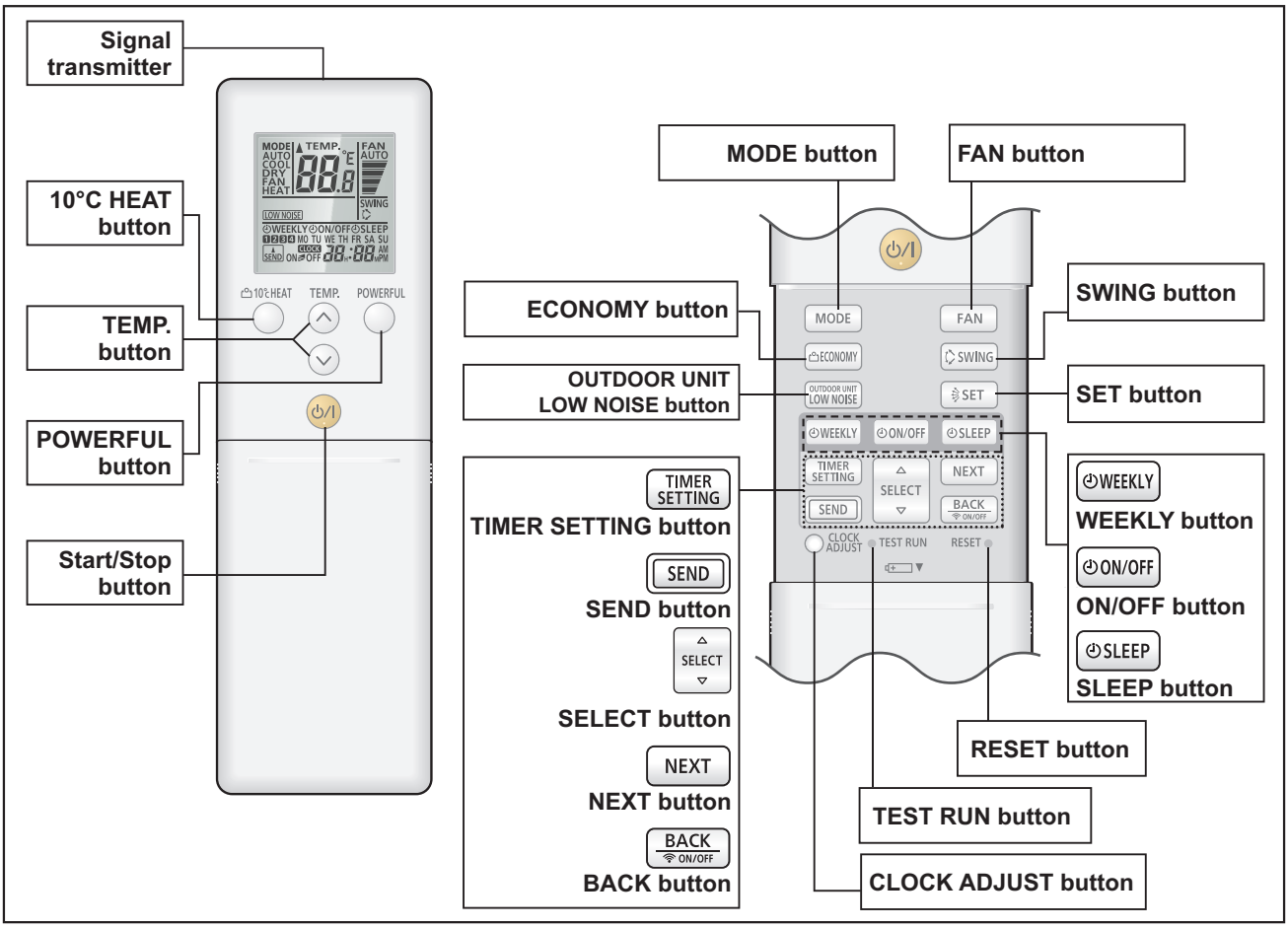

NOTE: Functions may differ by type of the indoor unit. For details, refer to the operation manual.

Display panel

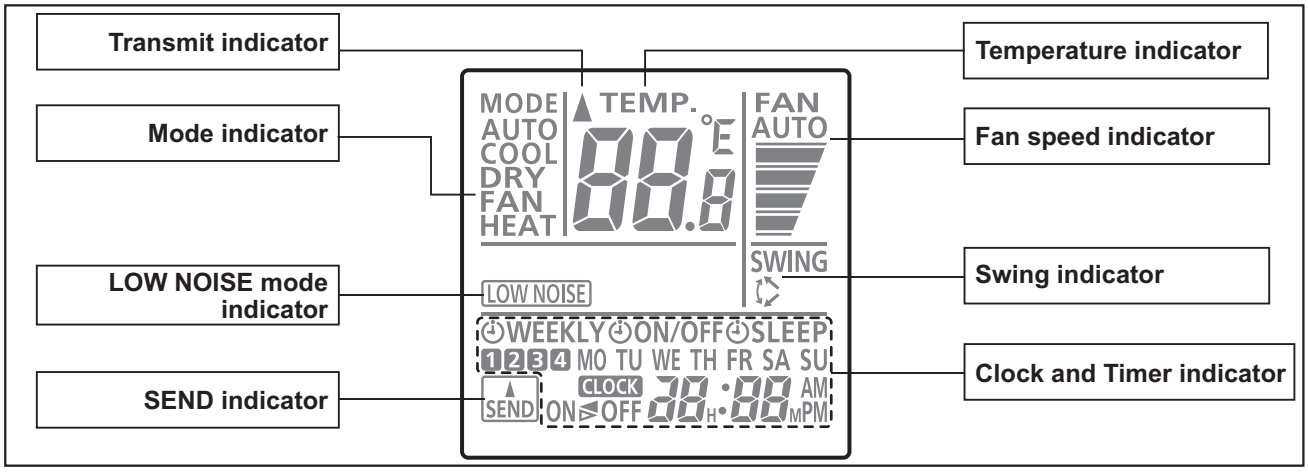

To facilitate explanation, the accompanying illustration has been drawn to show all possible indicators; in actual operation, however, the display will only show those indicators appropriate to the current operation.

AR-REJ1E

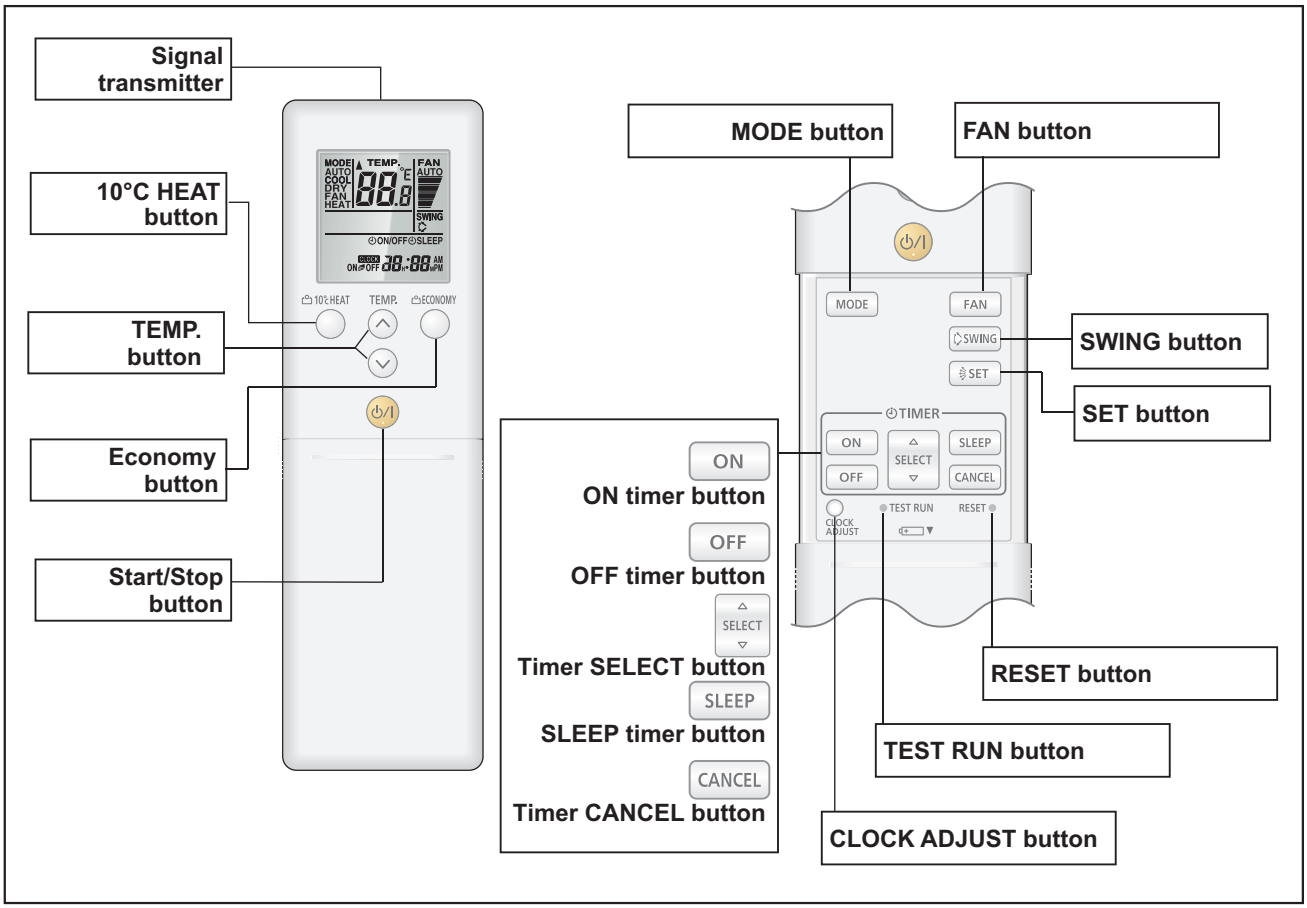

NOTE: Functions may differ by type of the indoor unit. For details, refer to the operation manual.

Display panel

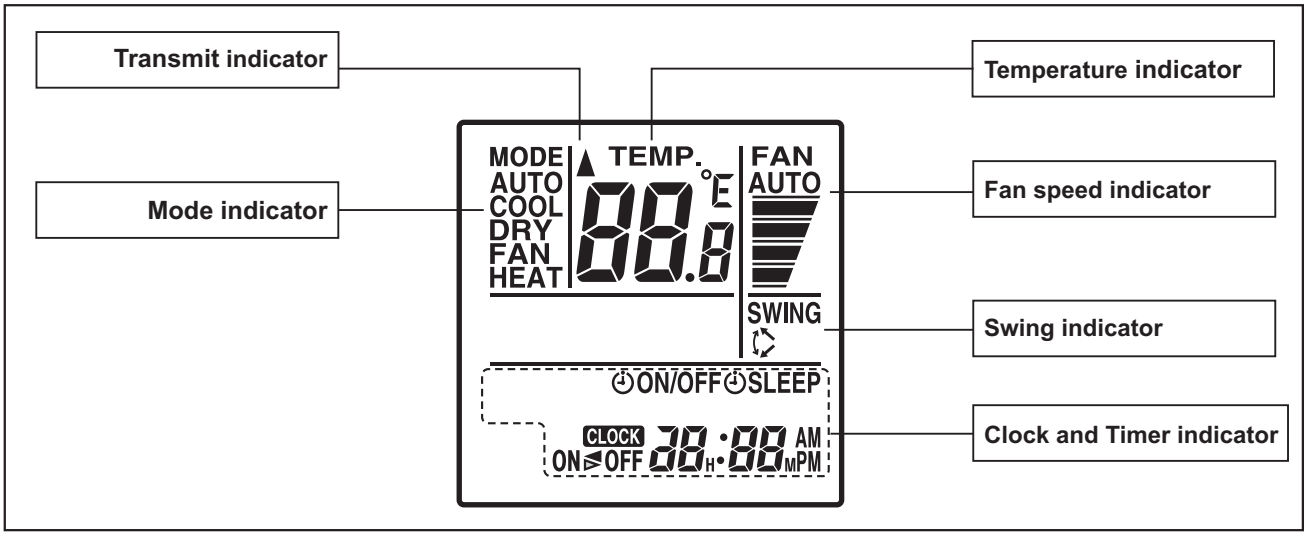

To facilitate explanation, the accompanying illustration has been drawn to show all possible indicators; in actual operation, however, the display will only show those indicators appropriate to the current operation.

4-5 UNIT
MULTI-SPLIT TYPE

■ Specifications

● Controller

Unit: mm

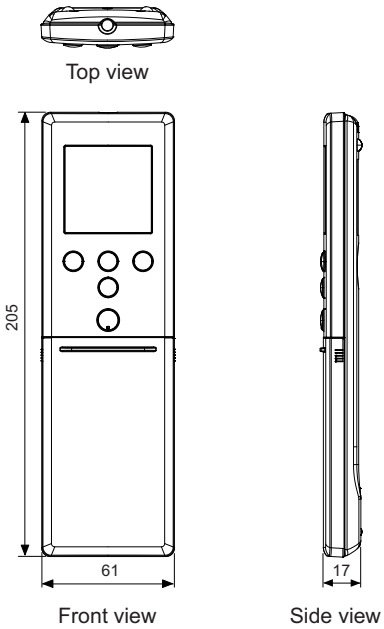

Size (H × W × D)	mm	205 × 61 × 17
Weight	g	124 (without batteries)

● Holder

Unit: mm

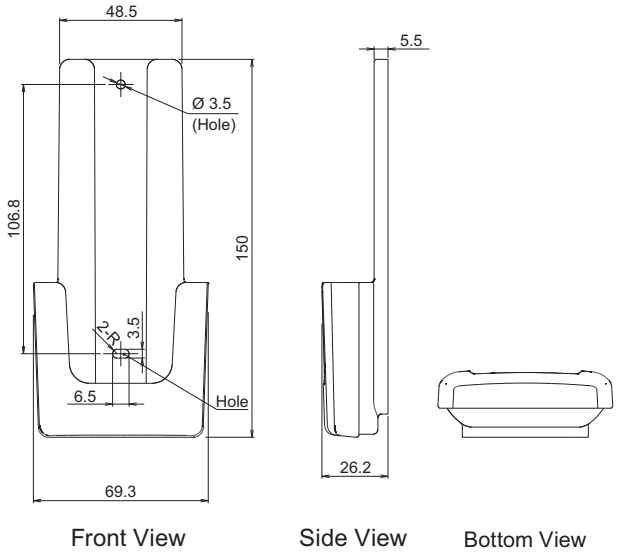

Size (H × W × D)	mm	150 × 69.3 × 26.2
Weight	g	27

14-2. Wireless remote controller (AR-REW3E)

■ Overview

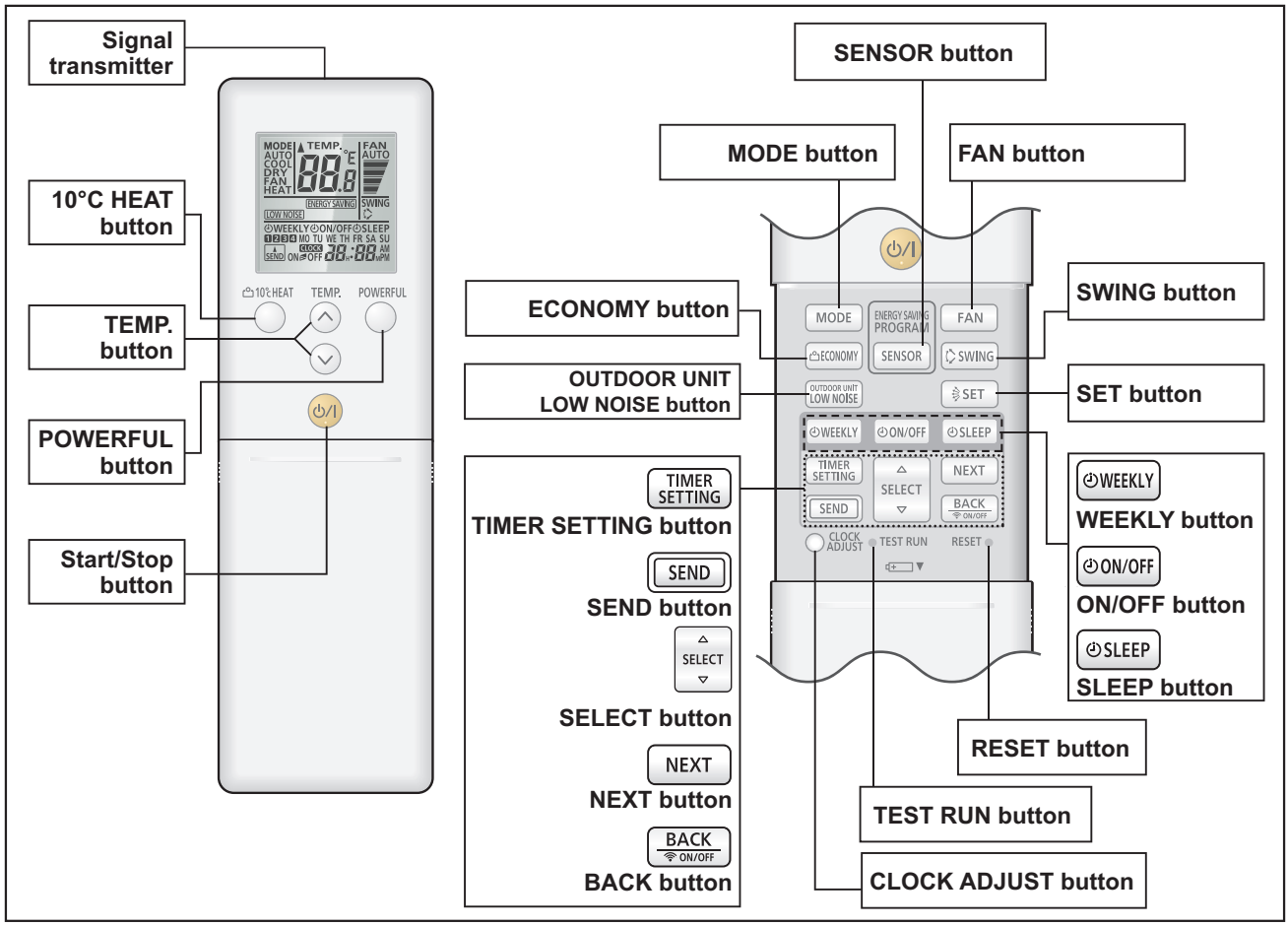

NOTE: Functions may differ by type of the indoor unit. For details, refer to the operation manual.

Display panel

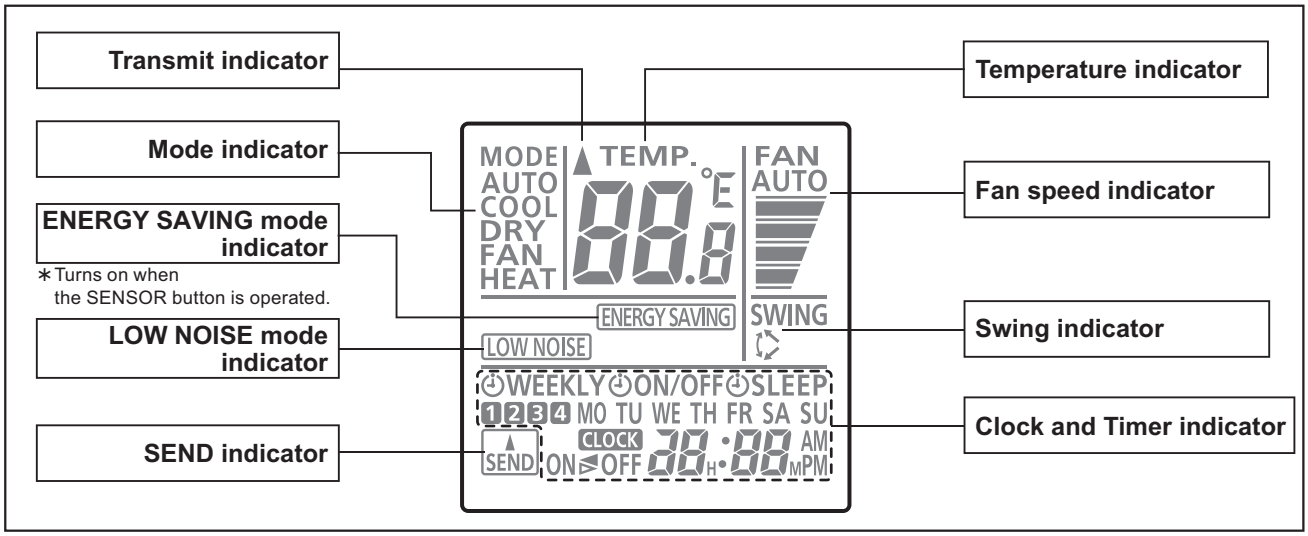

To facilitate explanation, the accompanying illustration has been drawn to show all possible indicators; in actual operation, however, the display will only show those indicators appropriate to the current operation.

4-5 UNIT
MULTI-SPLIT TYPE

■ Specifications

● Controller

Unit: mm

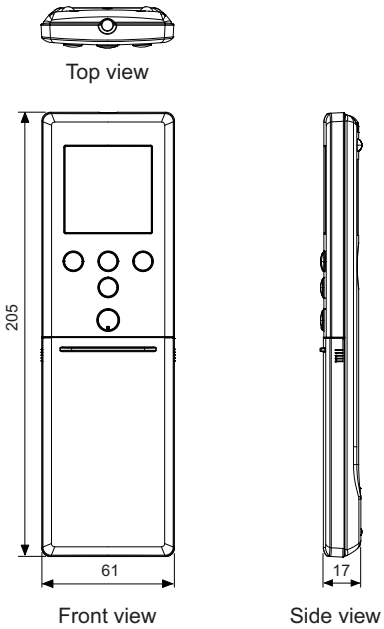

Size (H × W × D)	mm	205 × 61 × 17
Weight	g	124 (without batteries)

● Holder

Unit: mm

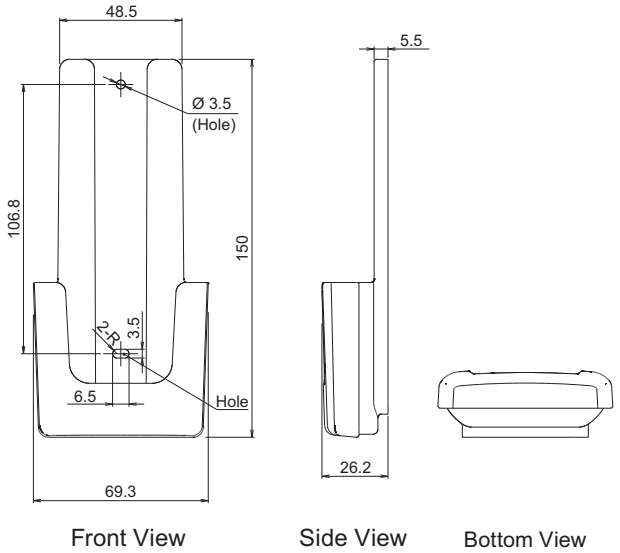

Size (H × W × D)	mm	150 × 69.3 × 26.2
Weight	g	27

14-3. Wireless remote controller (AR-REW2E)

■ Overview

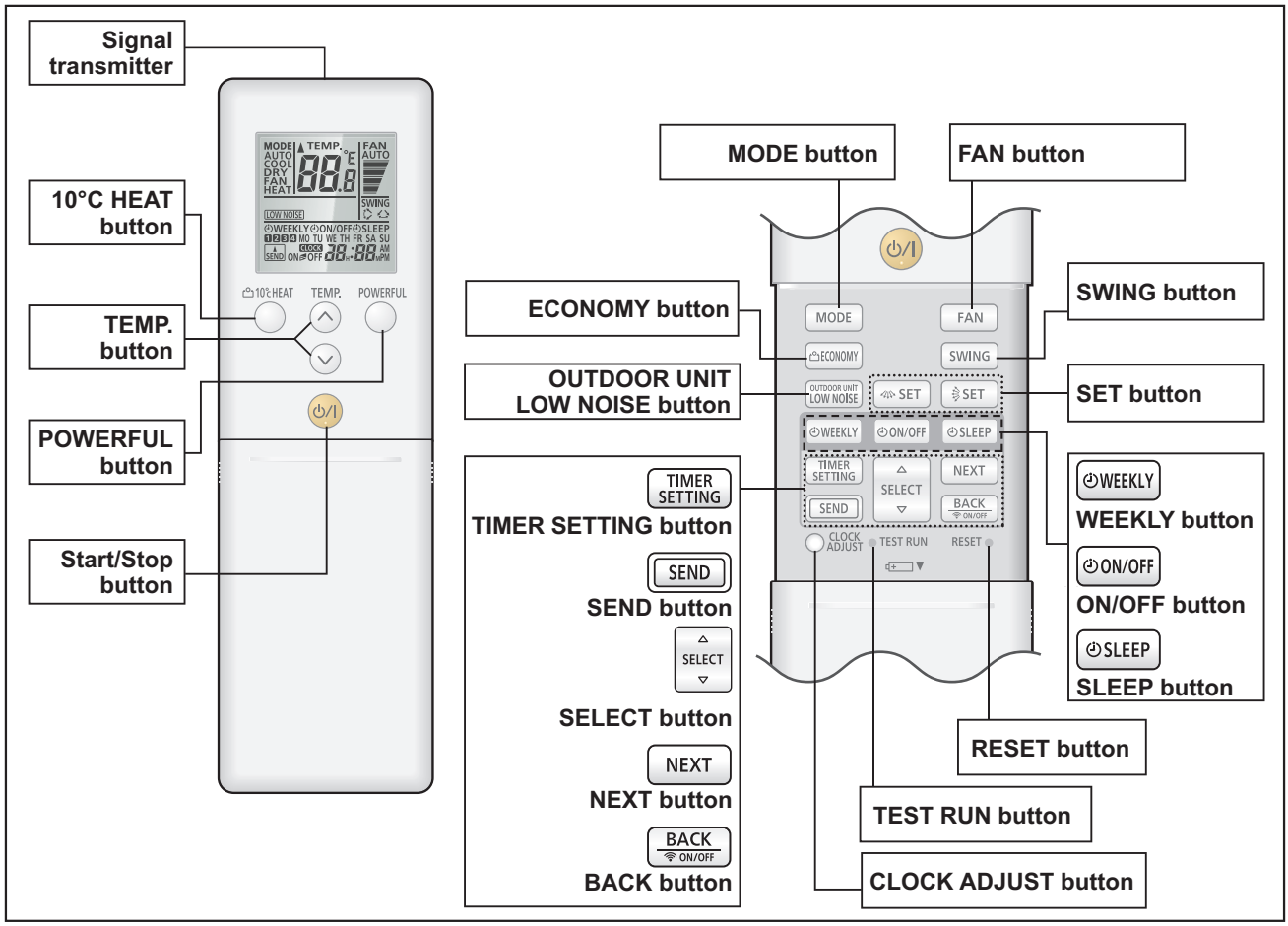

NOTE: Functions may differ by type of the indoor unit. For details, refer to the operation manual.

Display panel

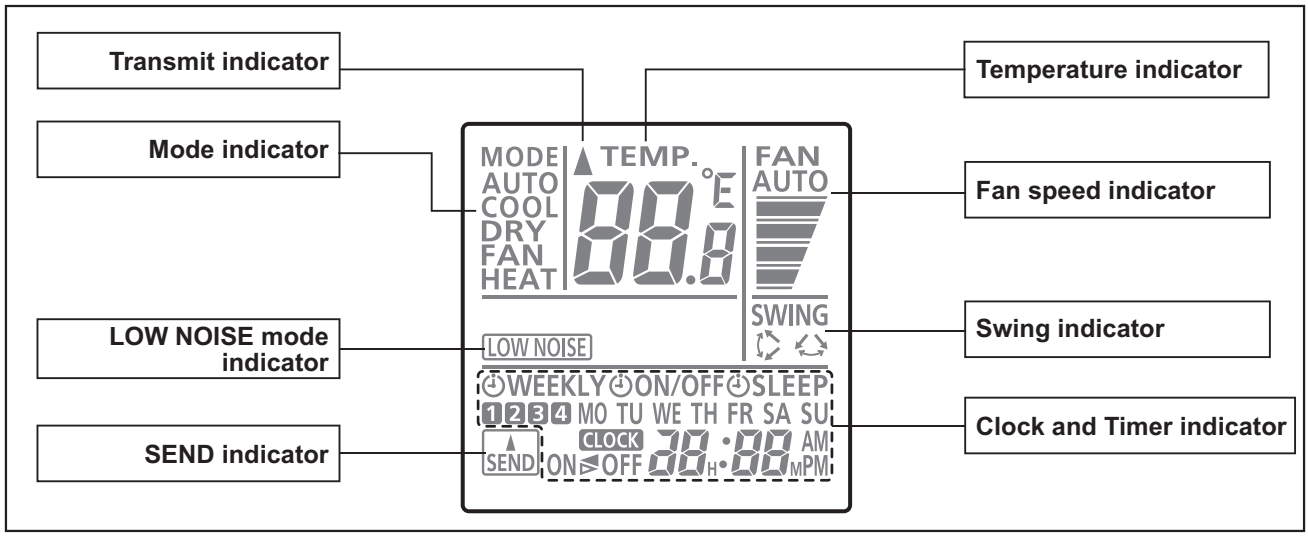

To facilitate explanation, the accompanying illustration has been drawn to show all possible indicators; in actual operation, however, the display will only show those indicators appropriate to the current operation.

4-5 UNIT
MULTI-SPLIT TYPE

■ Specifications

● Controller

Unit: mm

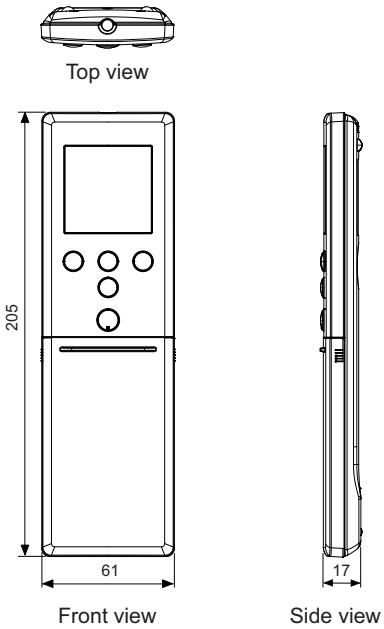

Size (H × W × D)	mm	205 × 61 × 17
Weight	g	125 (without batteries)

● Holder

Unit: mm

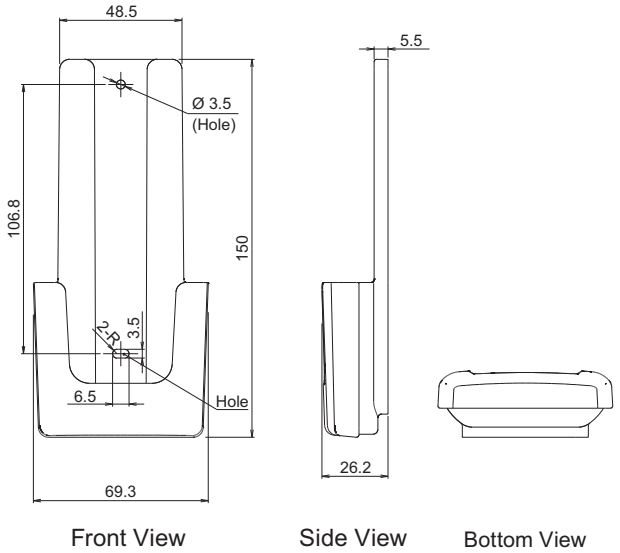

Size (H × W × D)	mm	150 × 69.3 × 26.2
Weight	g	27

14-4. Wireless remote controller (AR-REM7E)

■ Overview

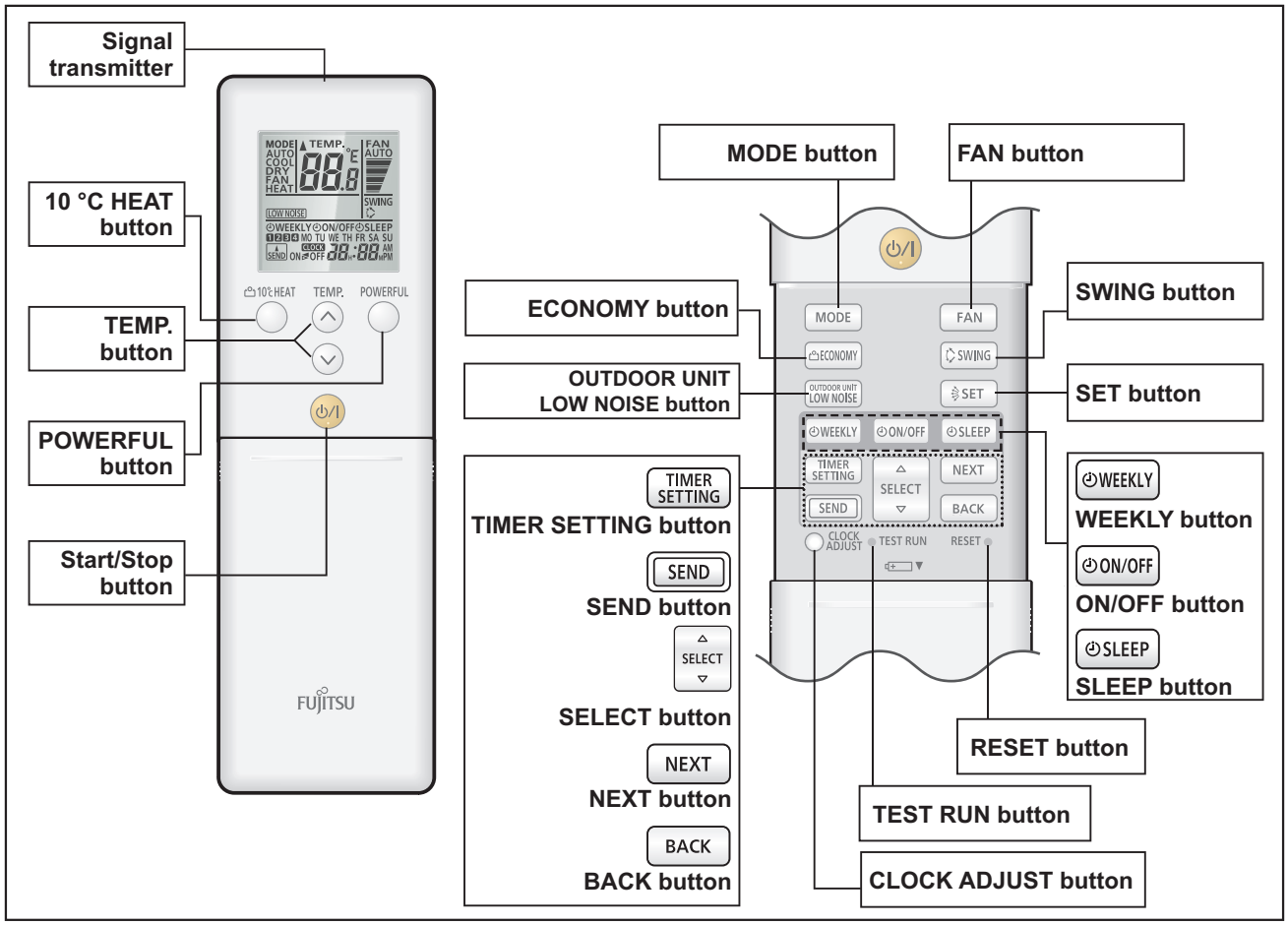

NOTE: Functions may differ by type of the indoor unit. For details, refer to the operation manual.

Display panel

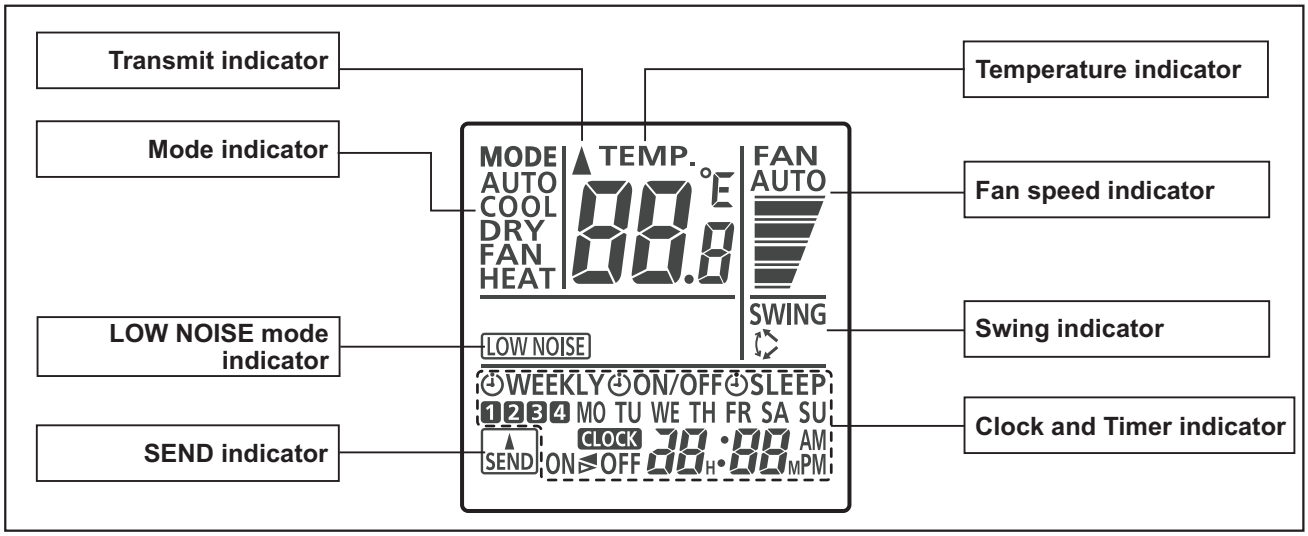

To facilitate explanation, the accompanying illustration has been drawn to show all possible indicators; in actual operation, however, the display will only show those indicators appropriate to the current operation.

4-5 UNIT
MULTI-SPLIT TYPE

■ Specifications

● Controller

Unit: mm

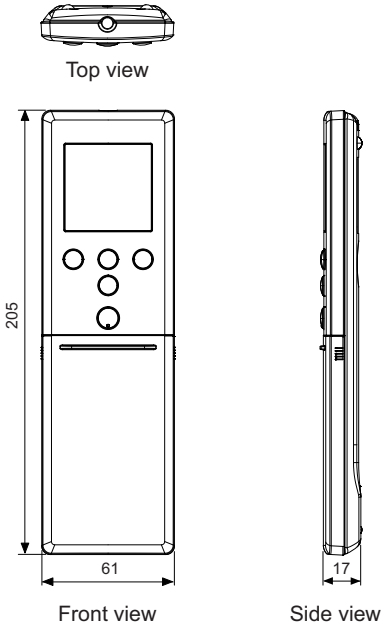

Size (H × W × D)	mm	205 × 61 × 17
Weight	g	124 (without batteries)

● Holder

Unit: mm

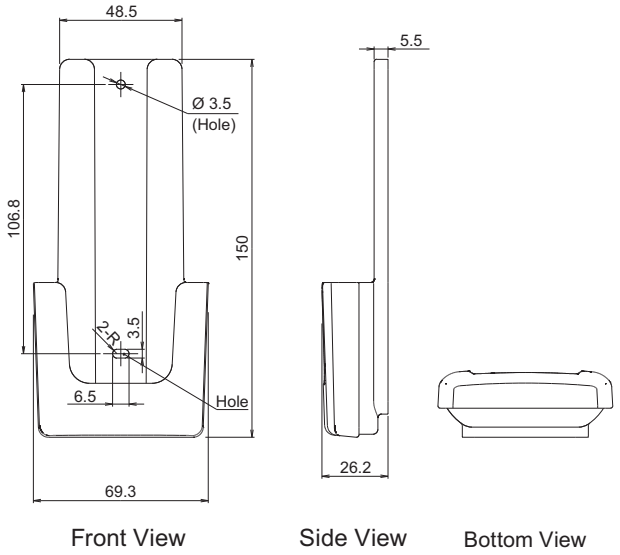

Size (H × W × D)	mm	150 × 69.3 × 26.2
Weight	g	27

14-5. Wireless remote controller (AR-RMB1E and AR-RMB1E-B)

■ Overview

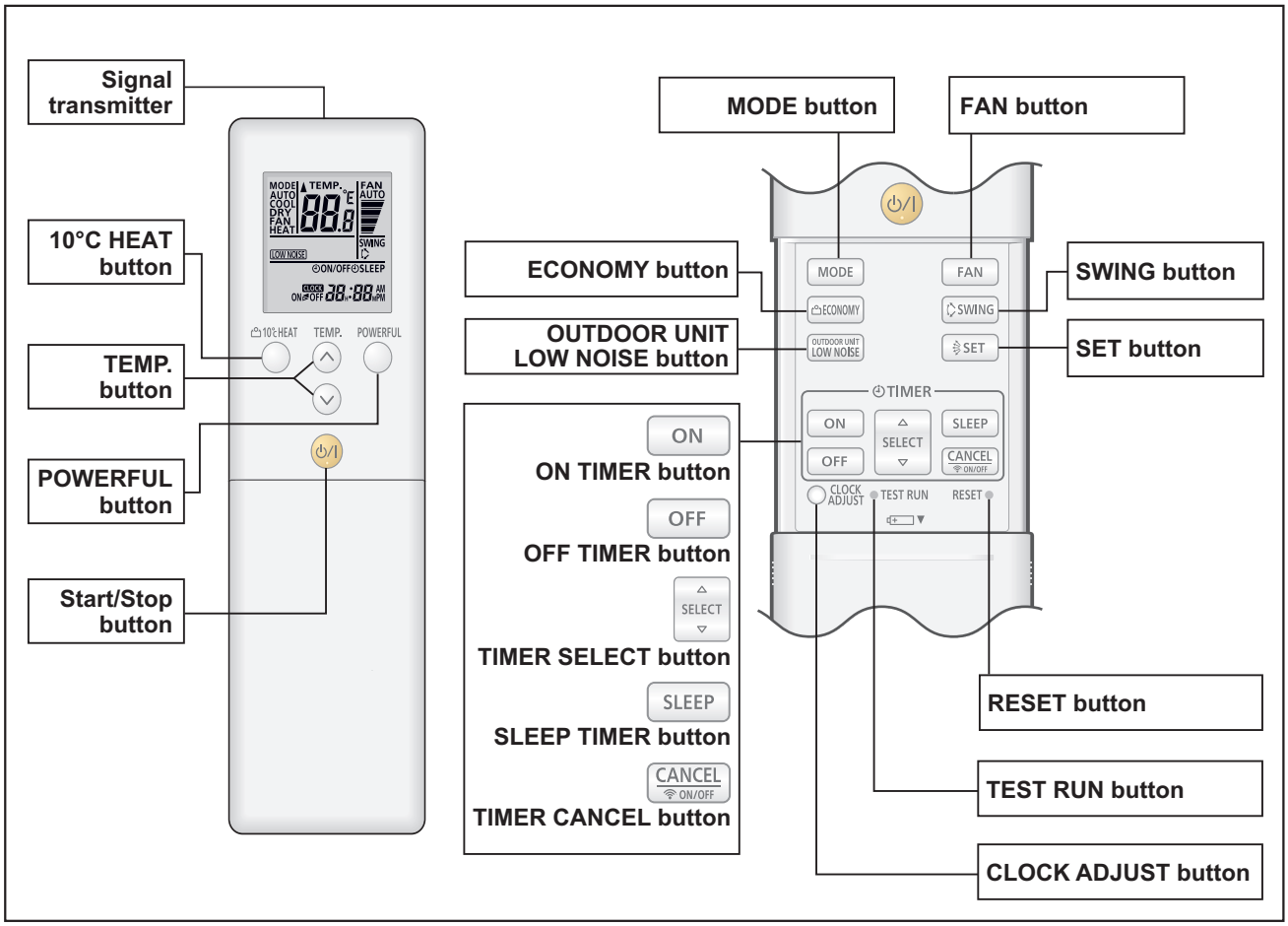

NOTE: Functions may differ by type of the indoor unit. For details, refer to the operation manual.

Display panel

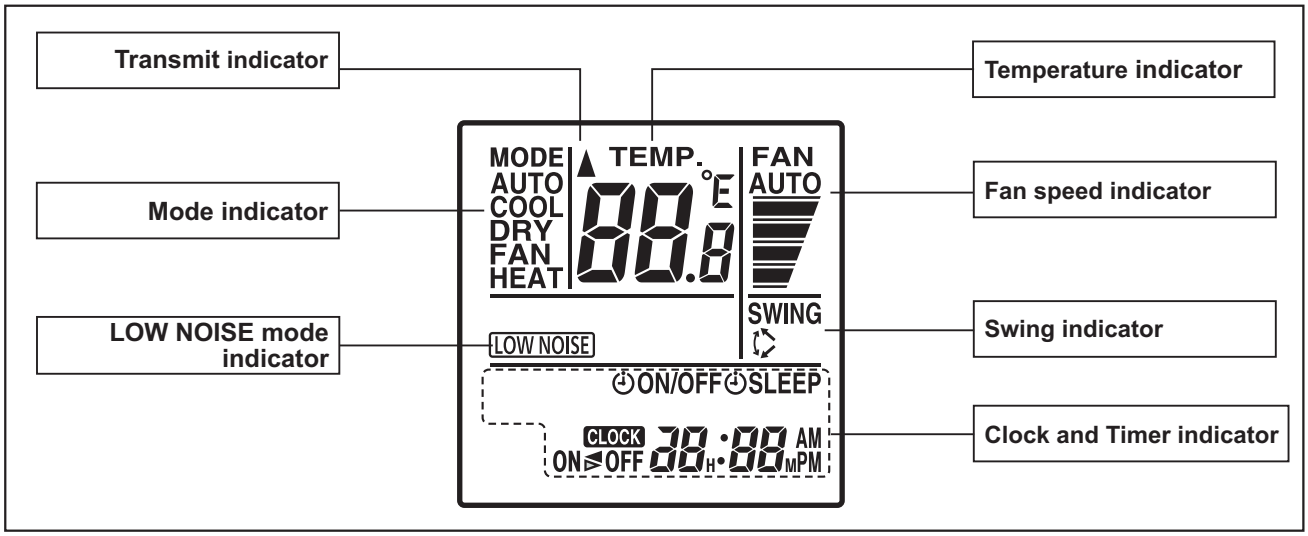

To facilitate explanation, the accompanying illustration has been drawn to show all possible indicators; in actual operation, however, the display will only show those indicators appropriate to the current operation.

4-5 UNIT
MULTI-SPLIT TYPE

■ Specifications

● Controller

Unit: mm

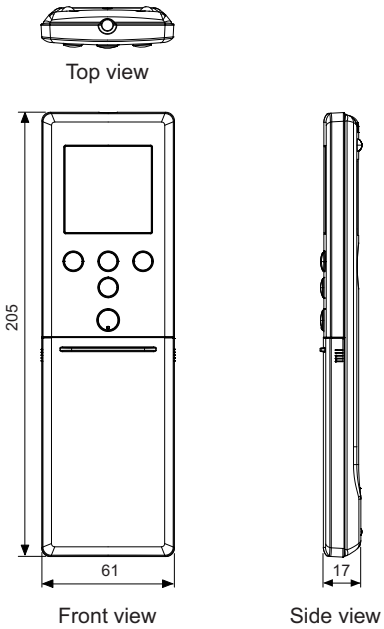

Size (H × W × D)	mm	205 × 61 × 17
Weight	g	124 (without batteries)

● Holder

Unit: mm

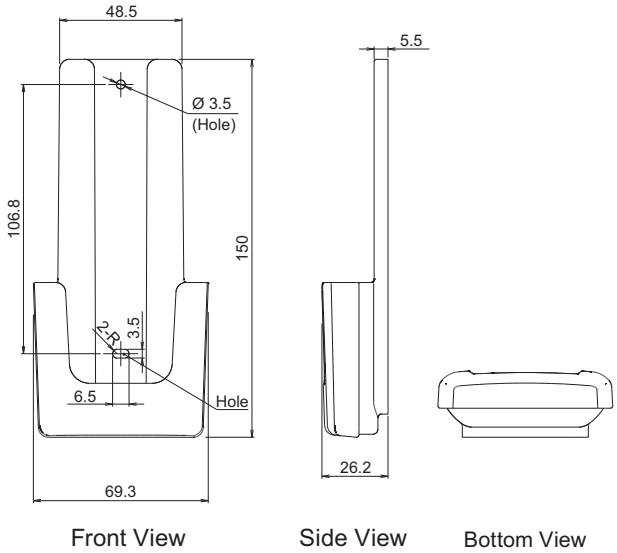

Size (H × W × D)	mm	150 × 69.3 × 26.2
Weight	g	27

14-6. Wireless remote controller (UTY-LNTY: Optional part) and IR receiver kit with Wireless remote controller (UTY-LBTYM or UTY-LBTYH: Optional part)

■ Overview

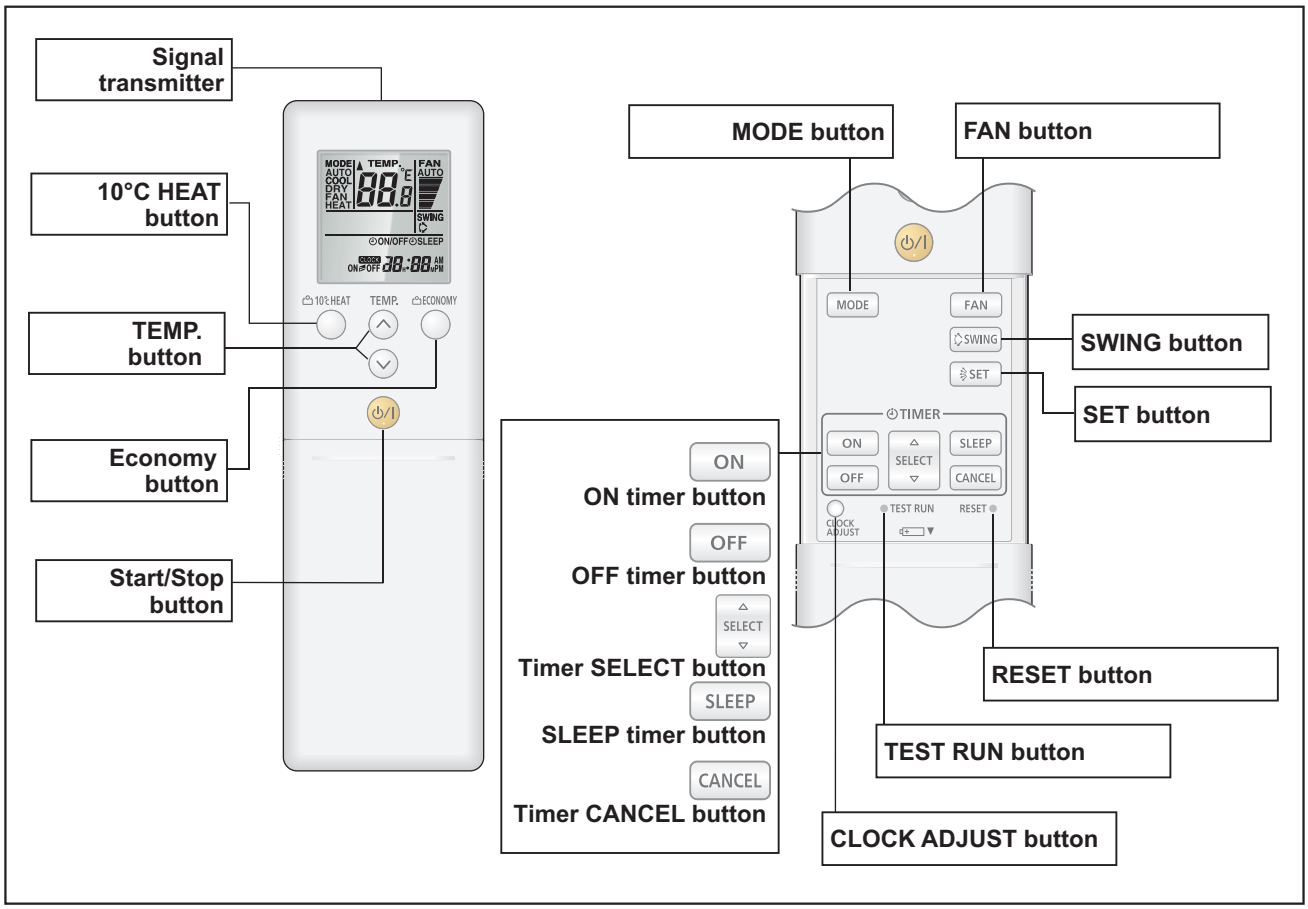

NOTE: Functions may differ by type of the indoor unit. For details, refer to the operation manual.

Display panel

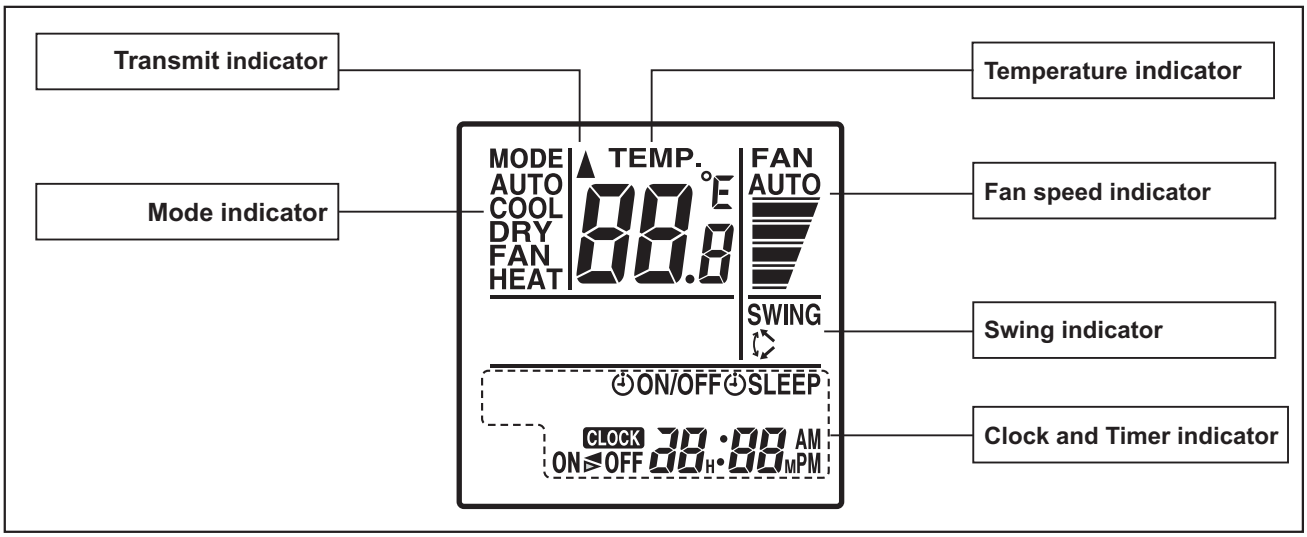

To facilitate explanation, the accompanying illustration has been drawn to show all possible indicators; in actual operation, however, the display will only show those indicators appropriate to the current operation.

4-5 UNIT
MULTI-SPLIT TYPE

■ Specifications

● Controller

Unit: mm

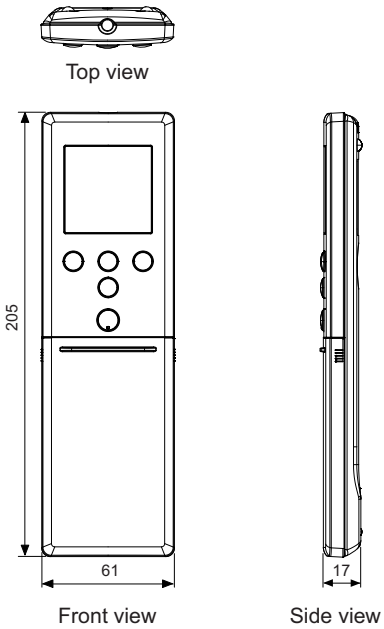

Size (H × W × D)	mm	205 × 61 × 17
Weight	g	124 (without batteries)

● Holder

Unit: mm

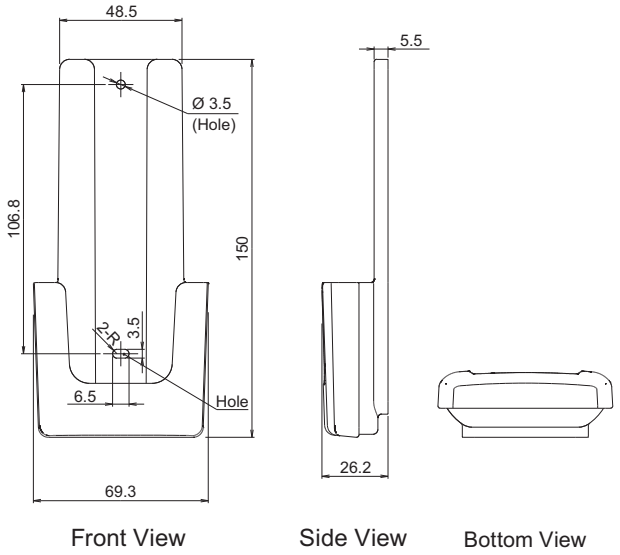

Size (H × W × D)	mm	150 × 69.3 × 26.2
Weight	g	27

● IR receiver (UTY-LBTYM)

Unit: mm

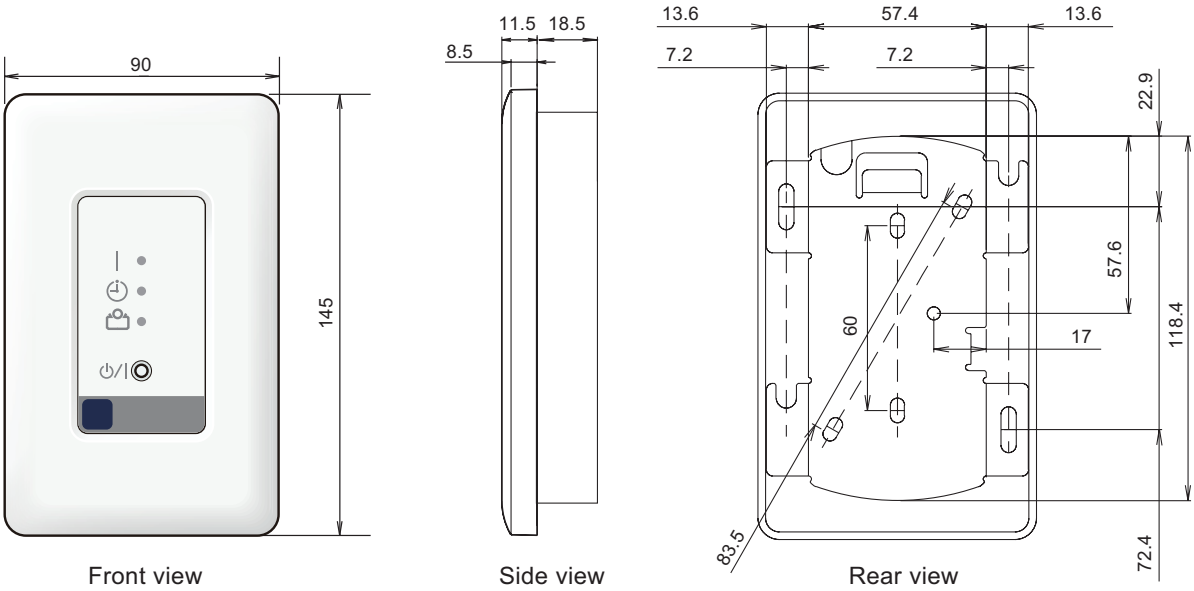

Size (H × W × D)	mm	145 × 90 × 30
Weight	g	150

● IR receiver (UTY-LBTYH)

Unit: mm

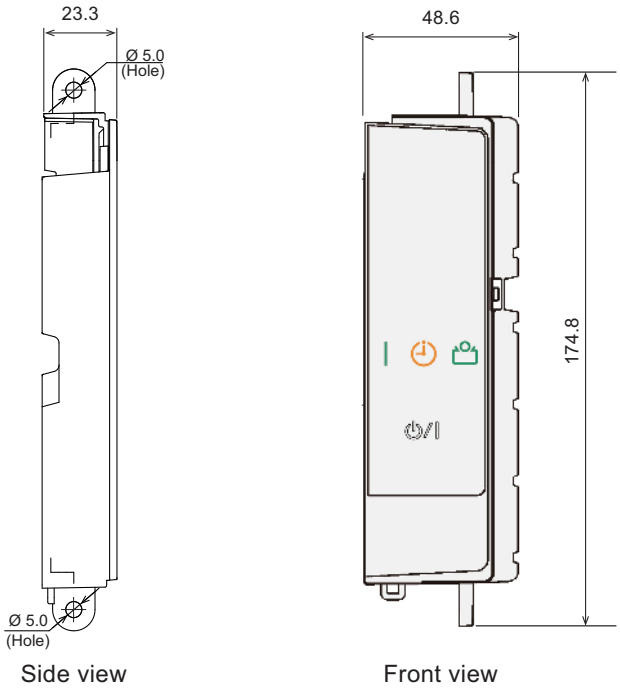

Size (H × W × D)	mm	174.8 × 48.6 × 23.3

14-7. Wireless remote controller (AR-RPF4E)

■ Overview

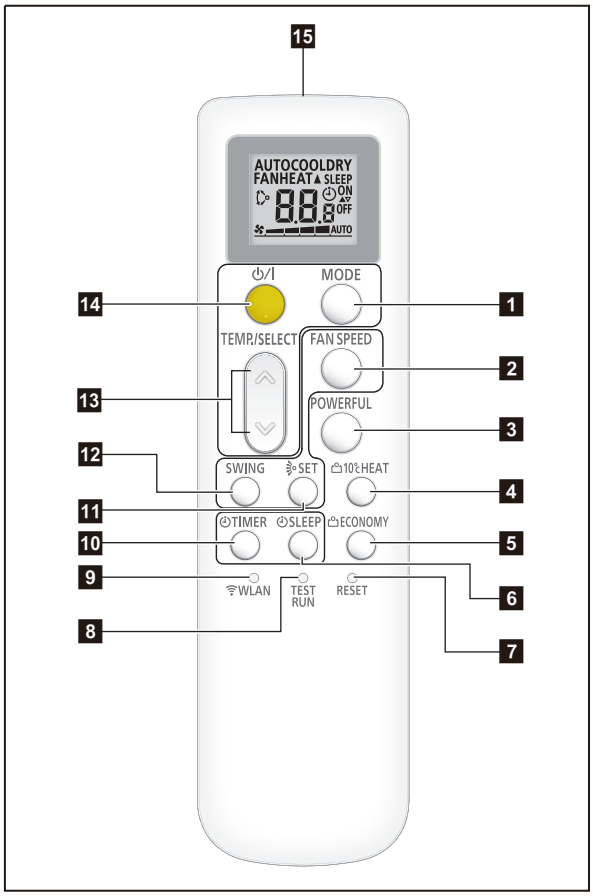

Display panel

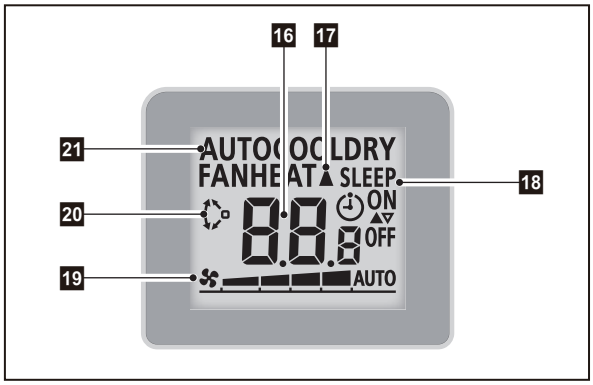

NOTES:

- Functions may differ by type of the indoor unit. For details, refer to the operation manual.
- This figure depicts all indicators that the remote controller can display on the screen for the functional explanation.
  In actual operation, the remote controller shows only the indicators that are appropriate for the current process.

1 MODE button

- Switches operation mode (AUTO, COOL, DRY, FAN, and HEAT).
- Starts/ends the remote controller custom code (max. 4 types) change.

2 FAN SPEED button

- Press the FAN SPEED button while the air conditioner is operating, to control fan speed.

3 POWERFUL button

4 10 °C HEAT button

5 ECONOMY button

6 SLEEP TIMER button

7 RESET button

8 TEST RUN button

- Used only when installing the air conditioner, and should not be used under normal conditions, as it will cause the indoor unit's thermostat malfunction.
- If this button is pressed during normal operation, the indoor unit will switch to test operation mode, and the operation indicator lamp and the timer indicator lamp on the indoor unit will begin to flash simultaneously.
- To stop the test operation mode, press the START/STOP button. Then, the air conditioner stops the operation.

NOTE: If the service check mode starts unintentionally and "- -" appears on the remote controller display, press the START/STOP button to end this operation.

9 WLAN button

- Starts the wireless LAN setting.

10 TIMER button

11 SET button (Up/down airflow)

12 SWING button

13 TEMP./SELECT button

- Adjusts the setting temperature.
- Adjusts the value of the timer settings.
- Sets the remote controller code.

14 START/STOP button

15 Signal transmitter

16 Temperature and time indicator

- Displays set temperature.
- In timer setting, it displays the timer time. After finishing the timer setting, set temperature will reappear.

17 Signal transmit indicator

18 Timer mode indicator

19 Fan speed indicator

20 Swing indicator

21 Operating mode indicator

4-5 UNIT
MULTI-SPLIT TYPE

■ Specifications

● Controller

Unit: mm

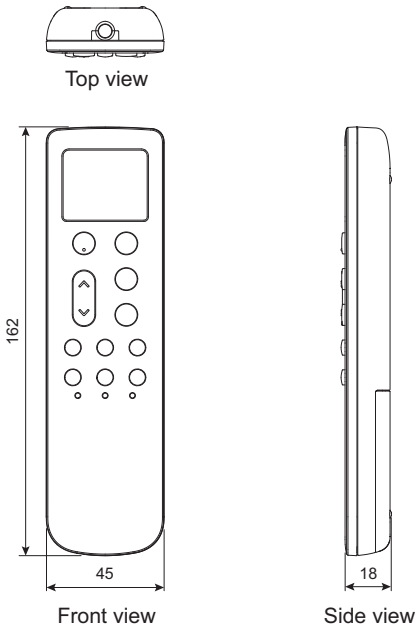

Size (H × W × D)	mm	162 × 45 × 18
Weight	g	65.5 (without batteries)

● Holder

Unit: mm

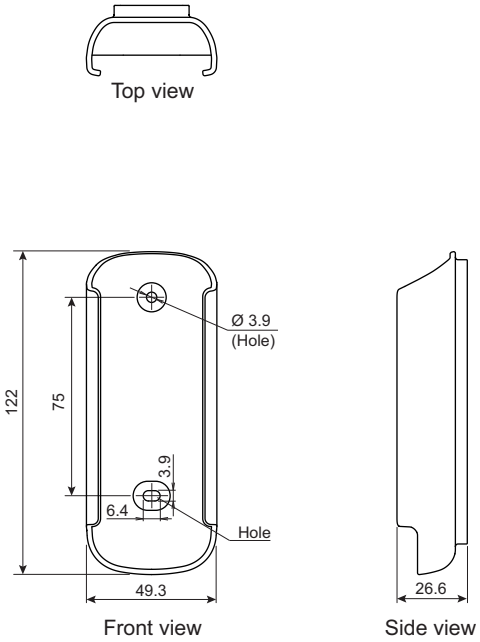

Size (H × W × D)	mm	122 × 49.3 × 26.6
Weight	g	23.5

14-8. Wired remote controller (UTY-RNNYM: Optional part)

■ Overview

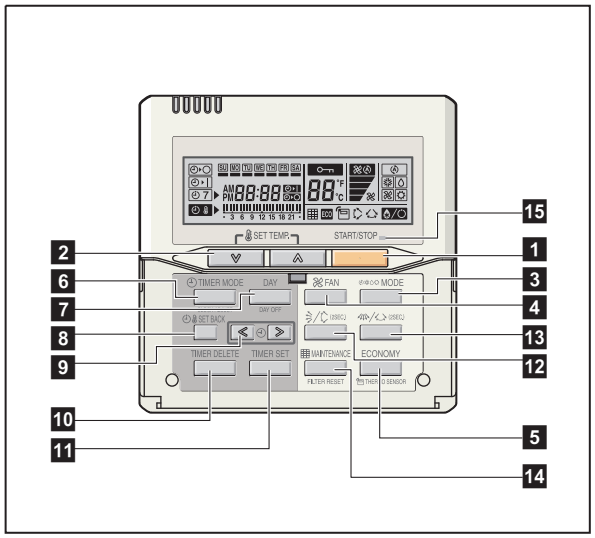

Display panel

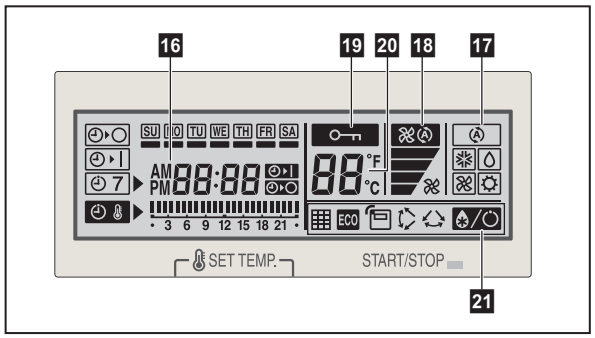

NOTE: Functions may differ by type of the indoor unit. For details, refer to the operation manual.

1 START/STOP button
Starts and stops operation.

2 SET TEMP. button
Selects the setting temperature.

3 MODE button
Selects the operating mode (AUTO, HEAT, FAN, COOL, and DRY).

4 FAN button
Selects the fan speed AUTO ,QUIET , LOW , MED , and HIGH).

5 ECONOMY (THERMO SENSOR) button
Turns the economy-efficient mode on and off.

6 TIMER MODE (CLOCK ADJUST) button
Selects the timer mode (off timer, on timer, and weekly timer). Sets the current time.

7 DAY (DAY OFF) button
Temporarily cancels one day timer.

8 SET BACK button
Selects the set back timer.

9 Set time button
Pressed to set time.

10 TIMER DELETE button
Deletes the weekly timer schedule.

11 TIMER SET button
Sets the date, hour, minute, and on-off time.

12 Vertical airflow direction and swing button
Push for 2 seconds to change the swing mode.

13 Horizontal airflow direction and swing button
Push for 2 seconds to change the swing mode.

14 FILTER RESET button

15 Operation lamp
Lights during operation and when the timer is on.

16 Timer and clock indicator

17 Operation mode indicator

18 Fan speed indicator

19 Operation lock indicator

20 Temperature indicator

21 Function indicators
- Defrost indicator
- Thermo sensor indicator
- Economy indicator
- Vertical swing indicator
- Horizontal swing indicator
- Filter indicator

System diagram

1 remote controller: **2 remote controllers:**

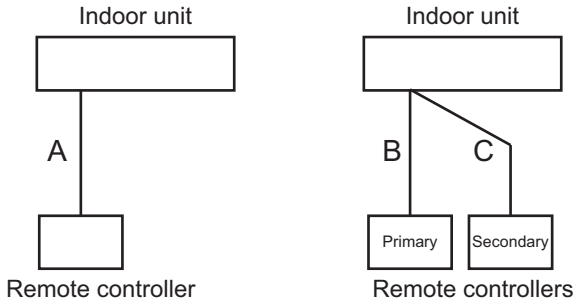

A, B, C: Remote controller cable
A ≤ 500 m;B + C ≤ 500 m

Electrical wiring

1 remote controller:

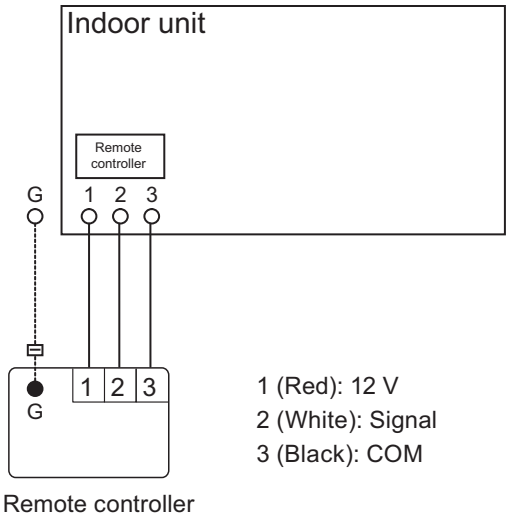

1 (Red): 12 V
2 (White): Signal
3 (Black): COM

2 remote controllers:

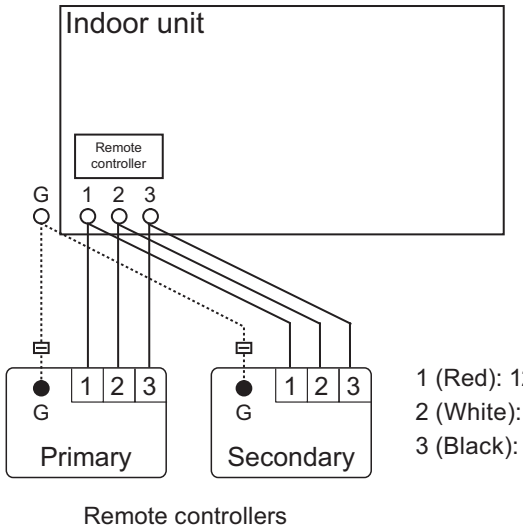

1 (Red): 12 V
2 (White): Signal
3 (Black): COM

4-5 UNIT
MULTI-SPLIT TYPE

■ Specifications

Dimensions and other specifications on the wired remote controller are as follows.

Unit: mm

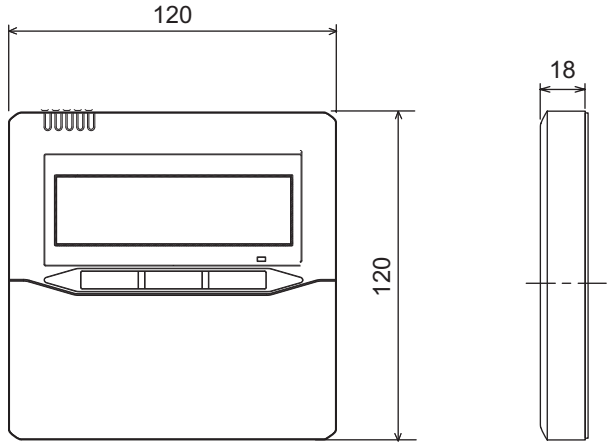

Front view　　Side view

Size (H × W × D)	mm	120 × 120 × 18
Weight	g	160
Cable length (accessory)	m	10
Power	V	12

● Wiring specifications

Use	Cable size	Wire type	Remarks
Remote controller cable	0.33 mm^2 (22 AWG)	Polar 3-core	Use sheathed PVC cable.

■ Installation

Connection pattern of wired remote controller varies by the type of the connected indoor unit.

● When connecting to terminal block (for Compact cassette, Slim duct, and Mini duct types)

Connect the end of remote controller cable directly to the exclusive terminal block.

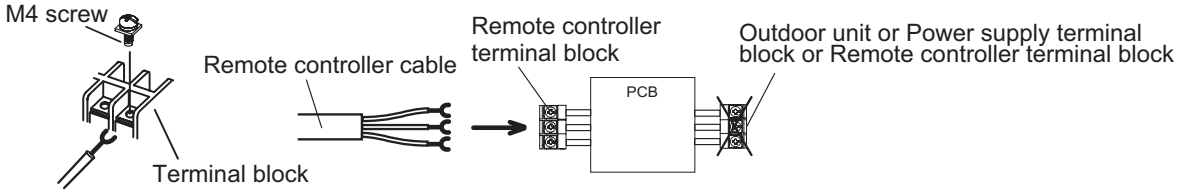

NOTE: It may be failed if it is connected to the outdoor unit or the terminal block for power supply.

14-9. Wired Remote Controller (UTY-RVRY : Optional part)

- Easy finger touch operation with LCD panel.
- Screen with anti-fingerprint coating
- Various information display (Room temp., Operation mode, Set temp. Fan speed, Timer)
- Control up to 16 indoor units
- Corresponds to 3 different languages (English, French, Spanish)

■ Overview

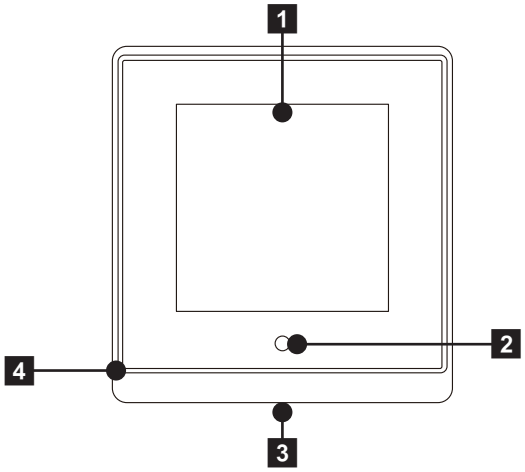

1 Touch screen

It can be operated by tapping or swiping.

NOTE: Operate with your finger or stylus pen (not included). Do not touch the screen with a hard or sharp object as it may cause a malfunction.

2 Ambient light sensor

Detects the brightness around the controller.

3 Operation lamp

Lights while the indoor units is operating. Blinks when an error occurs.

4 Remote temperature sensor (inside)

Detects the temperature around the controller.

Temperature setting screen

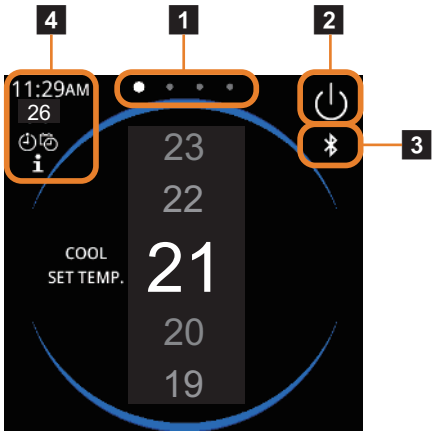

1 Page indicator
Shows the oder of pages and displayed page.

2 Operation On/Off button
Tap to start operation or stop the air conditioner.

3 Bluetooth icon
Displays when Bluetooth is enabled.

4 Information area
The displayed contents differ depending on the screen and settings.

Operation mode setting screen

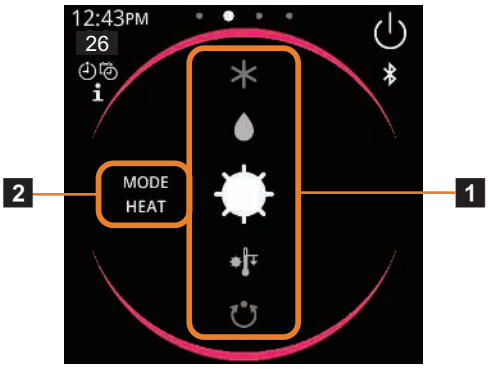

1 Operation mode setting area
Swipe up or down to select the operation mode.

2 Operation mode
The operation mode of the air conditioner is displayed.

Fan speed setting screen

1 Fan speed setting area
Swipe up or down to set the fan speed.
is AUTO.

2 Fan speed
Displays the set fan speed.

Other setting screen

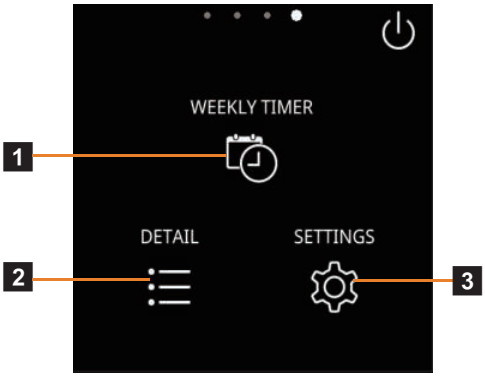

1 WEEKLY TIMER

2 DETAIL
For details of the settings, refer to the *OPERATION MANUAL* for this product.

3 SETTINGS
For details of the settings, refer to the *OPERATION MANUAL* for this product.

NOTE: To display settings screen, it is necessary to enter the admin password.

4-5 UNIT
MULTI-SPLIT TYPE

■ System diagrams

- **Multiple remote control**
  Up to 2 remote controllers can be used to operate the indoor units.

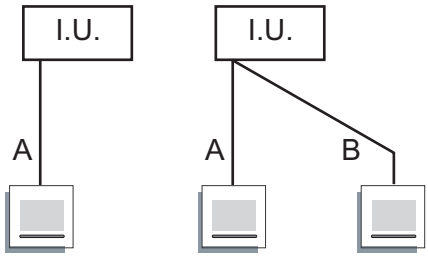

– Remote controller
  - A: UTY-RVRY
  - B: Other than UTY-RVRY (2-wire type only)

– Remote controller cable
  - A, B ≤ 70 m

NOTES:
- Only one UTY-RVRY is connectable in either connection pattern.
- Multiple installation method described above is prohibited to combine with 3-wired type remote controller.

- **Maximum connectable number of remote controller (2-wire type)**
  Maximum connectable number of remote controller (2-wire type) is limited by cable size and maximum cable length.

When using only remote controller other than UTY-RVRY				
Cable size (S)		Total cable length (L)		
AWG	mm^2	L ≤ 100 m	100 m < L ≤ 250 m	250 m < L ≤ 500 m
16	1.25	2	2	2
18	0.75 (1.25 > S ≥ 0.75)	2	2	2
20	0.5 (0.75 > S ≥ 0.5)	2	2	2
22	0.3 (0.5 > S ≥ 0.3)	2	1	1

When using UTY-RVRY only			
Cable size (S)		Total cable length (L)	
AWG	mm^2	L ≤ 70 m	70 m < L
16	1.25	1	—
18	0.75 (1.25 > S ≥ 0.75)	1	—
20	0.5 (0.75 > S ≥ 0.5)	1	—
22	0.3 (0.5 > S ≥ 0.3)	1	—

When a combination use of UTY-RVRY and the remote controller other than UTY-RVRY					
Cable size (S)		Total cable length (L)			
AWG	mm^2	L ≤ 70 m		70 m < L	
		UTY-RVRY	Other than UTY-RVRY	UTY-RVRY	Other than UTY-RVRY
16	1.25	1	1	—	—
18	0.75 (1.25 > S ≥ 0.75)	1	1	—	—
20	0.5 (0.75 > S ≥ 0.5)	1	1	—	—
22	0.3 (0.5 > S ≥ 0.3)	1	1	—	—

NOTE: A junction box might be necessary depending on the number of the connected remote controller, wiring conditions between the indoor unit and the remote controller, and so on. .

4-5 UNIT
MULTI-SPLIT TYPE

■ Electrical wiring

1 remote controller:

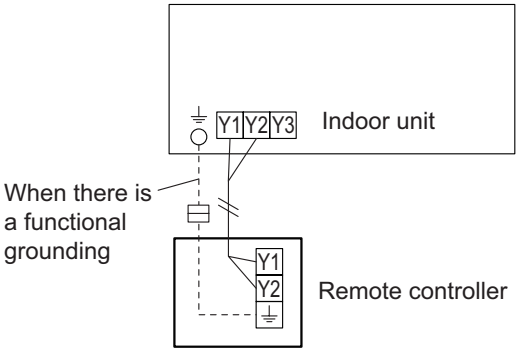

2 remote controllers:

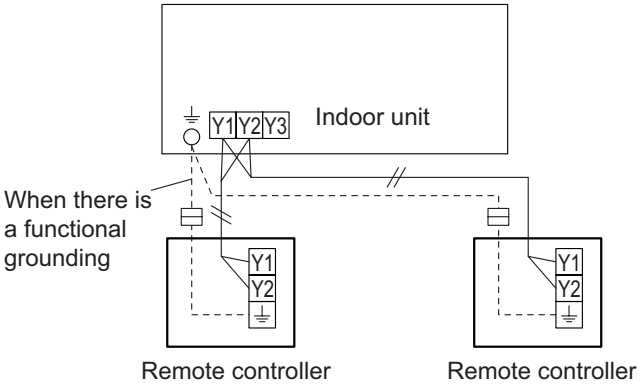

Group control:

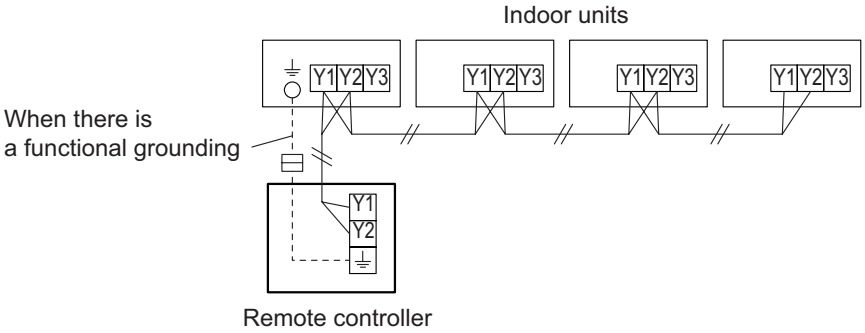

■ Dimensions

Unit: mm

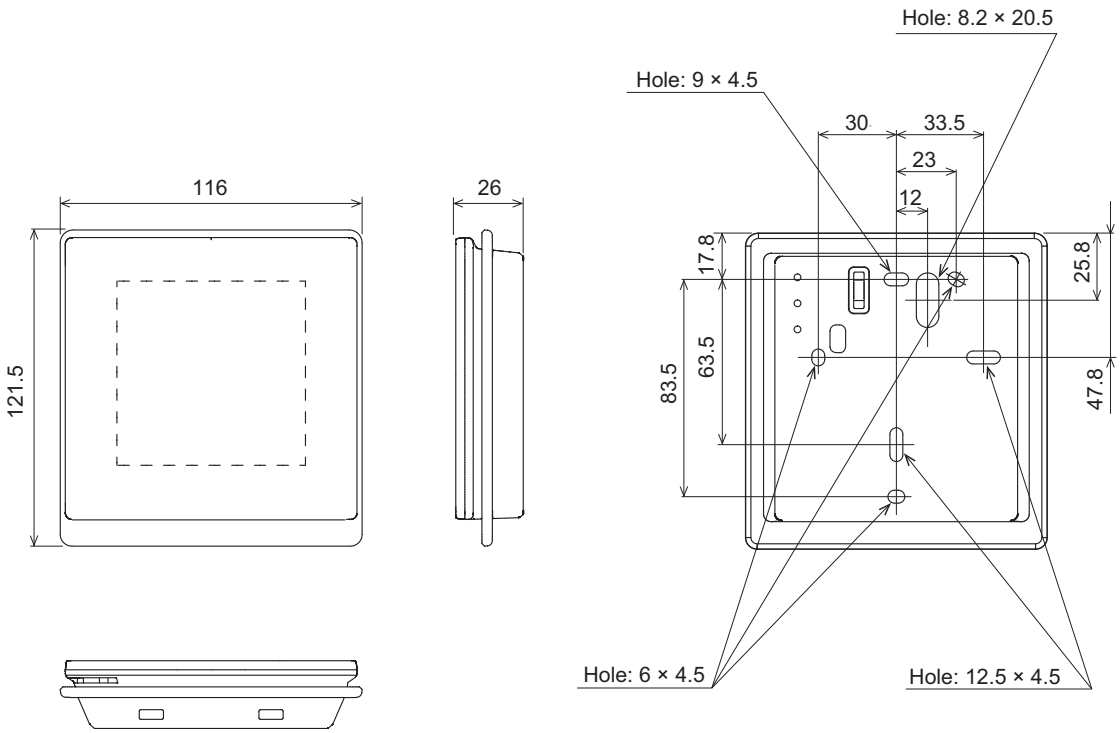

■ Installation space

- This product cannot be installed in a wall.
- Even when you install a remote controller to one of a switch box and the surface of a wall, secure the space shown in following figure. When there is insufficient space, there may be remote controller sensor misdetections and remote controller may be difficult.

Unit: mm

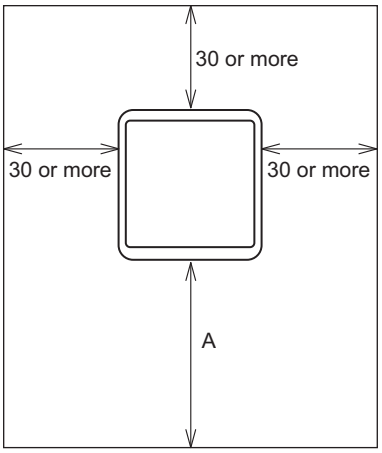

A: Secure enough space where a flat-blade screwdriver to take off a case can be inserted.

4-5 UNIT
MULTI-SPLIT TYPE

■ Installation

For details of installation, refer to the *INSTALLATION MANUAL* for this product.

- **Connector removal**
  Open the front case and remove the connector of the remote controller cable from the connector of the PCB on the front case (back side).

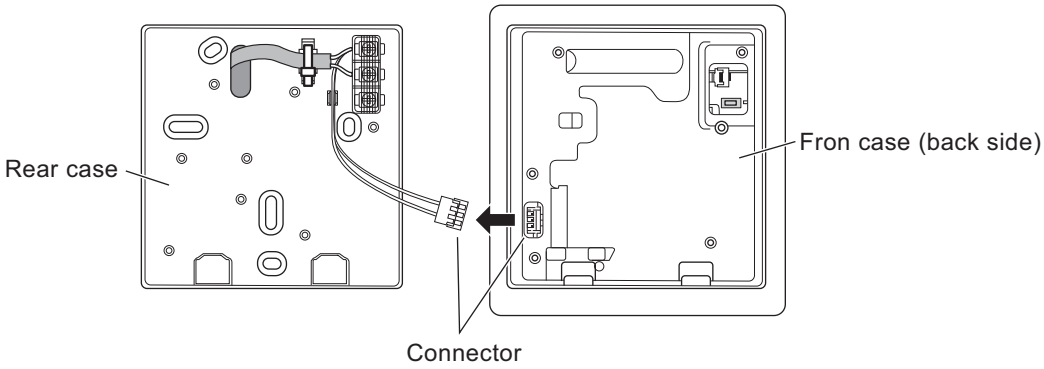

- **Switch setting**

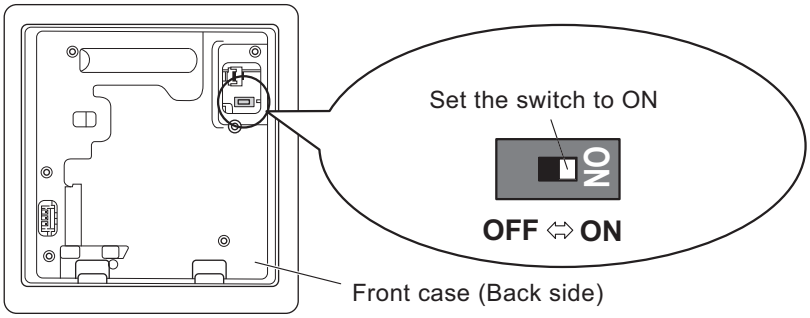

The switch performs the enabling/disabling of the backup function by the internal battery.
Before using this product, always set the switch to ON.

NOTES:

- When the power is turned on without setting the switch to ON, the set data by menu operation is erased and cause erroneous operation.
- The switch is set to OFF when shipped from the factory to prevent consumption of the charge.

- **Rear case installation**
  - **When attaching to switch box:**

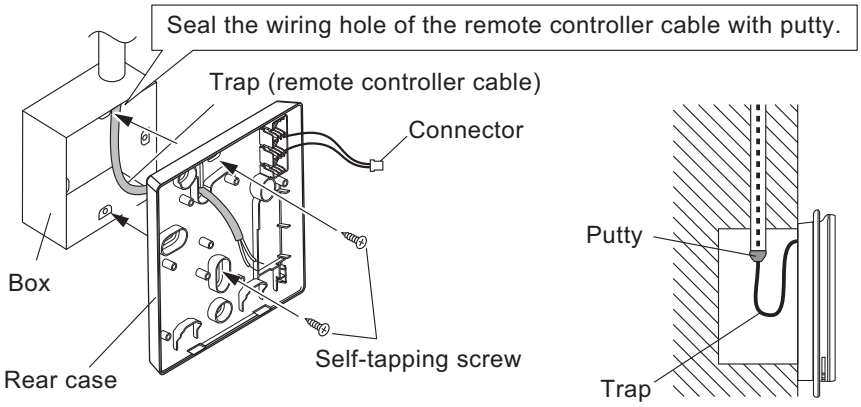

  - **When attaching to the wall directly:**

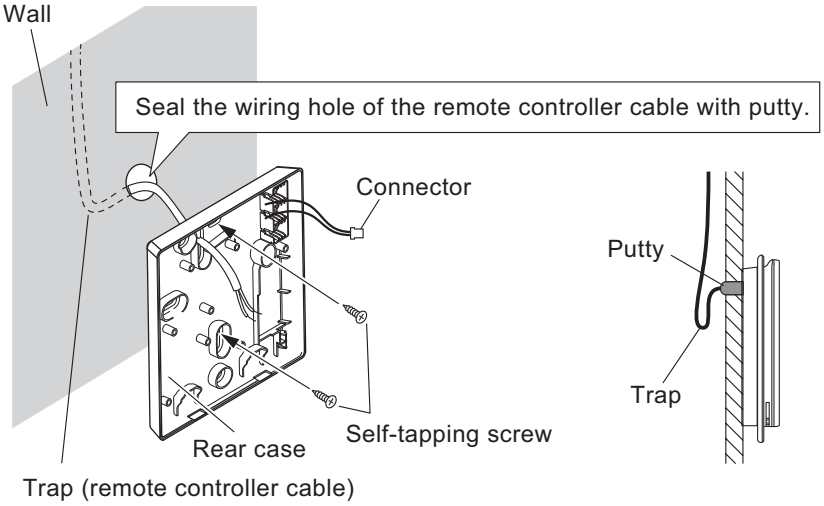

  - **When routing the cable on-wall:**

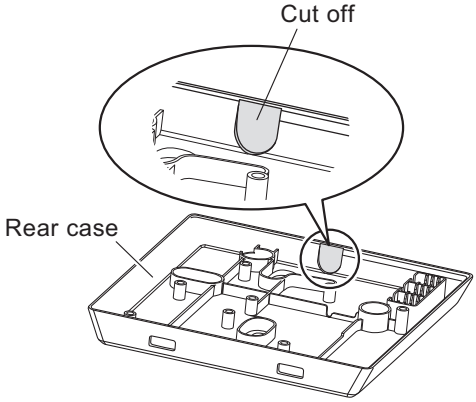

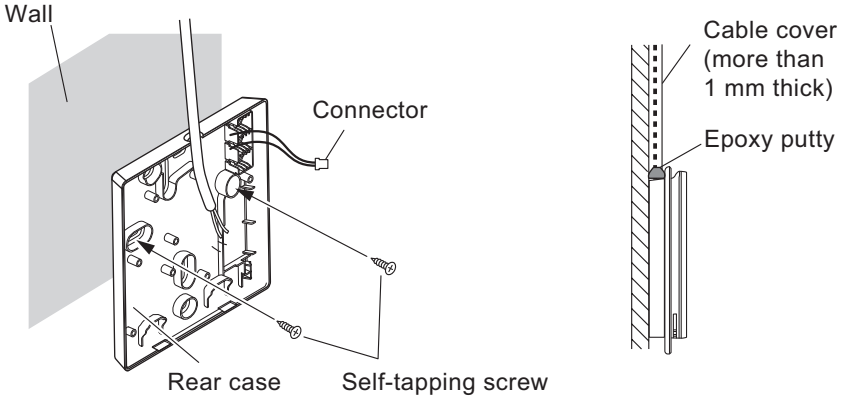

- **Remote controller cable connection**
  - Fasten the outside covering of the connection cable with the cable tie.

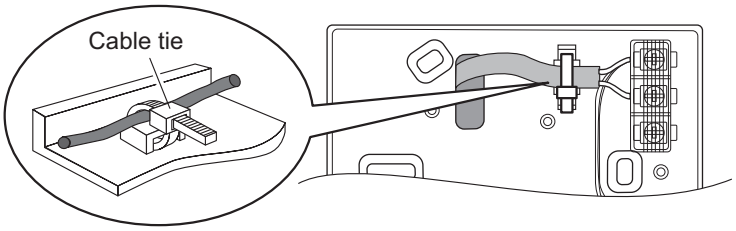

  - Connect the connector of the remote controller cable to the connector of the PCB on the front case (back side).

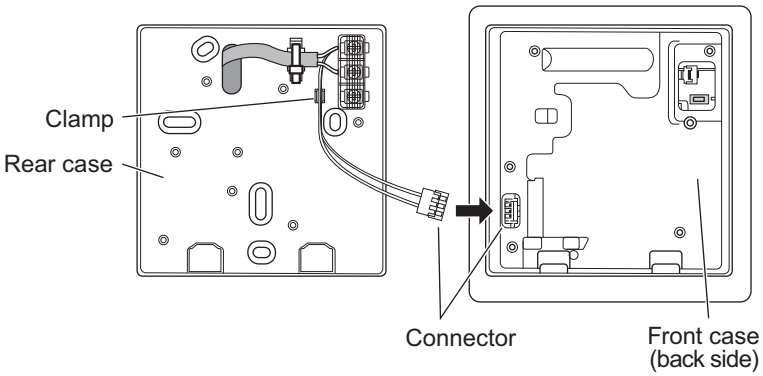

⚠ CAUTION

- Strip length must be specified dimension.
- Insert the cable deeply into the terminal.
- After the cable is inserted, check that the cable is not pulled out.
- Select a flexible cable that does not break the cable sheath even if you bind it with a cable tie around the cable sheath.
- Be careful to avoid breaking the cable by over-tightening the cable tie.

4-5 UNIT
MULTI-SPLIT TYPE

■ Specifications

Input voltage	V	DC 12
Power consumption	W	Max. 1.0
Display		4-inch TFT LCD (480 × 480 pixels) with touch screen
Usage temperature range	°C	0 to 40
Usage humidity range	%	20 to 90 (no condensation)
Storage temperature range	°C	-10 to 60
Storage humidity range	%	20 to 90 (no condensation)
Dimensions (H × W × D)	mm	121.5 × 116 × 26
Weight	g	225

● Wiring specifications

Use	Cable size	Wire type	Remarks
Remote controller cable	0.33 to 1.25 mm^2 (22 to 16 AWG)	Non polar 2-core	Use sheathed twist pair cable.*

*: Use shielded cable (locally purchased) in accordance with the regional cable standard.

14-10. Wired remote controller (UTY-RLRY: Optional part)

■ Overview

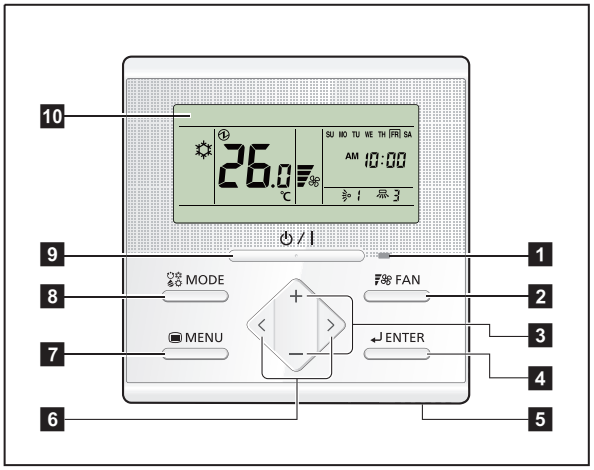

Display panel

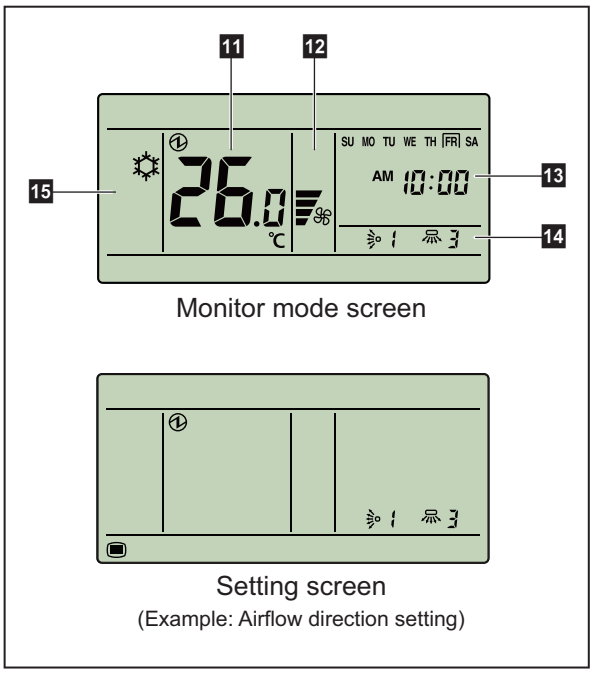

Monitor mode screen

Setting screen

(Example: Airflow direction setting)

NOTE: For individual icons in Setting screen and related functions, refer to the operation manual.

1 LED lamp (Operation indicator)

Lights while the indoor unit is operating. Blinks when an error occurred.

2 FAN button

Each time the button is pressed, fan speed switches as follows:

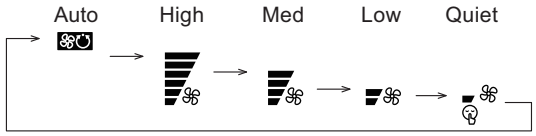

3 +, - buttons (Set temperature buttons)

Used to adjust temperature in Monitor mode screen.
+ button: Raise
- button: Lower
In Setting screen, used to select the setting items.
NOTE: When the operation mode is set to FAN, the temperature cannot be adjusted.

4 ENTER button

Used to enter setting items and settings.

5 Room temperature sensor (inside)

Senses ambient temperature of unit.

6 <, > buttons

Used to select setting items during the setting item selection screen is displayed.

7 MENU button

Used to display the setting item selection screen.

8 MODE button

Each time the button is pressed, operation mode switches as follows:

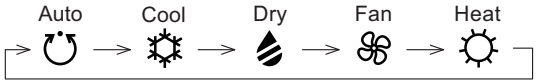

9 On/Off button

Starts or stops the operation.
NOTE: On/Off button cannot be operated at screens other than the Monitor mode screen.

10 Display panel

Displays Monitor mode screen or Setting screen.
Monitor mode screen is home screen of this controller, and the basic operation is performed in this screen.
In Setting screen, several settings are adjustable.

11 Temperature indicator

12 Fan speed indicator

13 Clock indicator

14 Airflow direction indicator

15 Operation mode indicator

■ System diagram

1 remote controller: **2 remote controllers:**

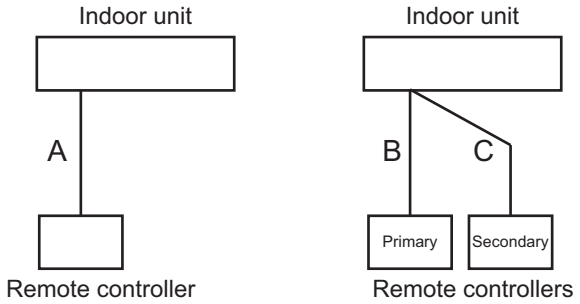

A, B, C: Remote controller cable
A ≤ 500 m;B + C ≤ 500 m

■ Electrical wiring

1 remote controller:

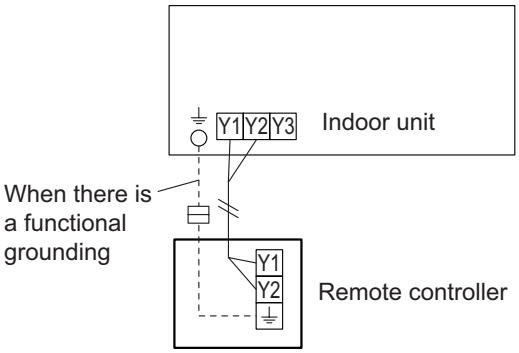

2 remote controllers:

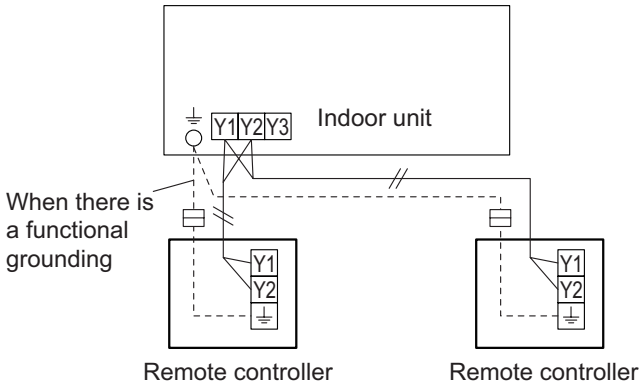

Group control:

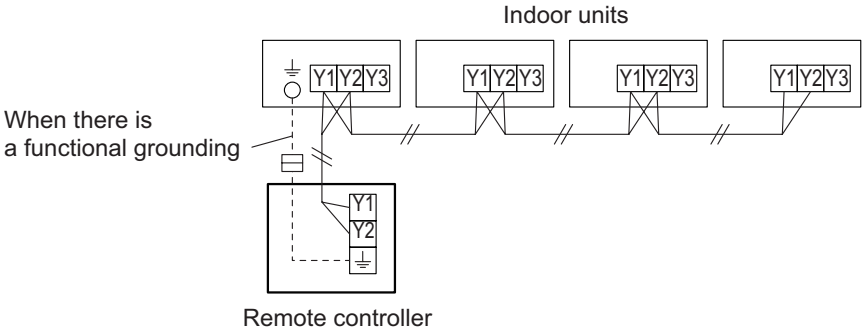

NOTE: Group connection with Polar 3-wired remote controller is not allowed.

4-5 UNIT
MULTI-SPLIT TYPE

■ Specifications

Dimensions and other specifications on the wired remote controller are as follows.

Unit: mm

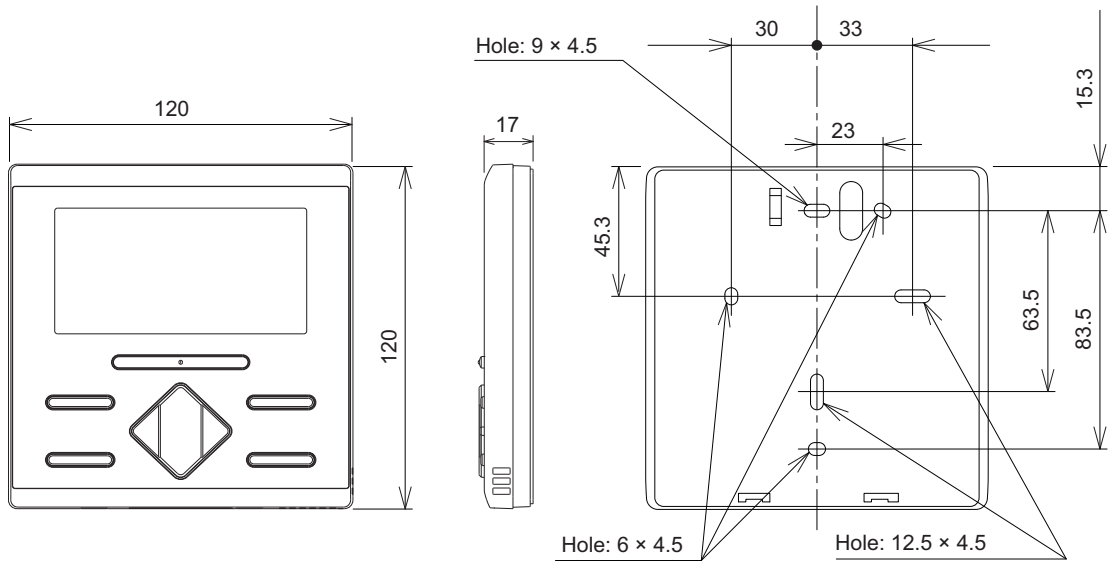

Front view Side view Rear view

Size (H × W × D)	mm	120 × 120 × 17
Weight	g	170
Power	V	12

● Wiring specifications

Use	Cable size	Wire type	Remarks
Remote controller cable	0.33 to 1.25 mm^2	Non-polar 2-core, Twisted pair	Use sheathed PVC cable.

■ Installation

Connect the end of remote controller cable directly to the exclusive terminal block.

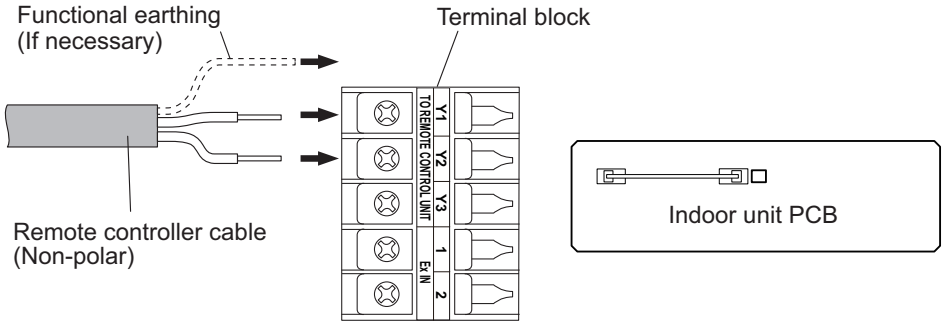

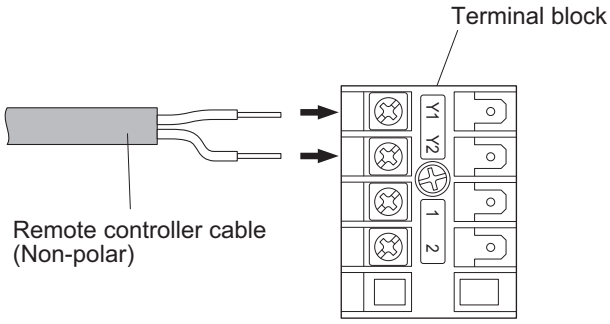

4-5 UNIT
MULTI-SPLIT TYPE

NOTES:

- The detailed shape and the layout of the terminal block and the PCB vary depending on the indoor unit type.
- Operation may fail if it is connected to the outdoor unit or the terminal block for power supply.

4-5 UNIT
MULTI-SPLIT TYPE

14-11. Wired remote controller (UTY-RVNYM: Optional part)

■ Overview

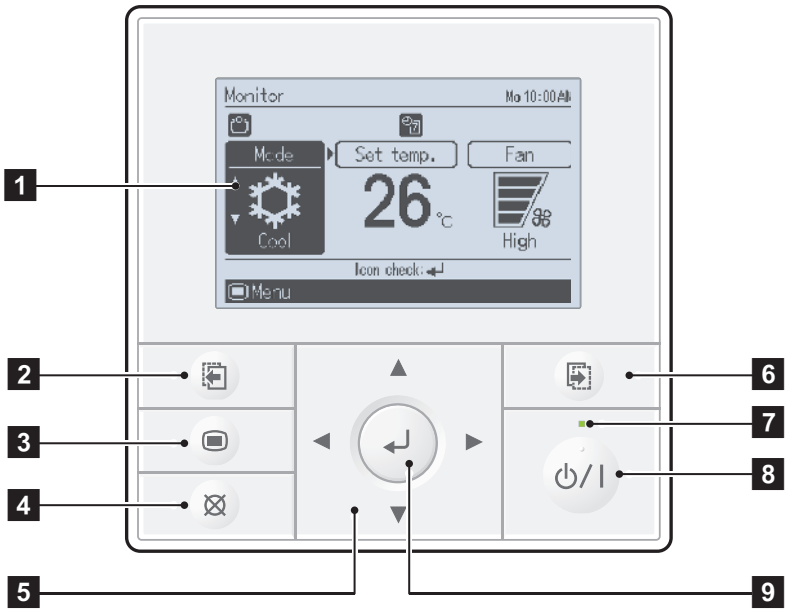

1 Display panel (with backlight)
2 Screen switch button (Left)
3 Menu button
4 Cancel button
5 Cursor button
6 Screen switch button (Right)
7 Power indicator
8 On/off button
9 Enter button

System diagram

1 remote controller: **2 remote controllers:**

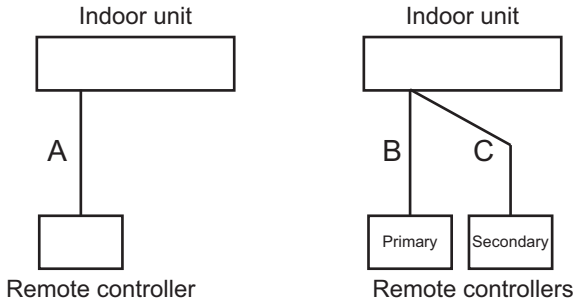

A, B, C: Remote controller cable
A ≤ 500 m;B + C ≤ 500 m

Electrical wiring

1 remote controller: **2 remote controllers:**

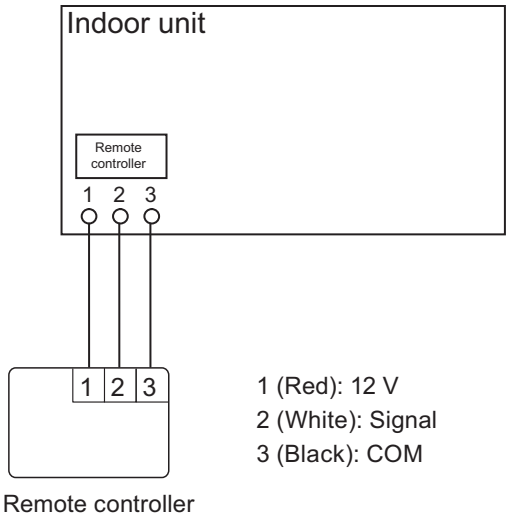

1 (Red): 12 V
2 (White): Signal
3 (Black): COM

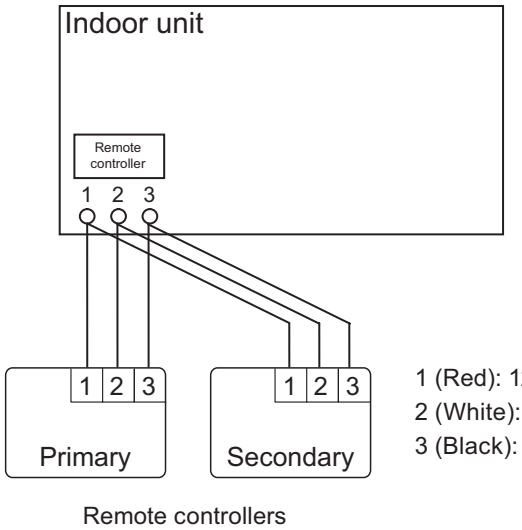

1 (Red): 12 V
2 (White): Signal
3 (Black): COM

Controller combination

As for the combined usage of the controller, refer to following figures.

● Good

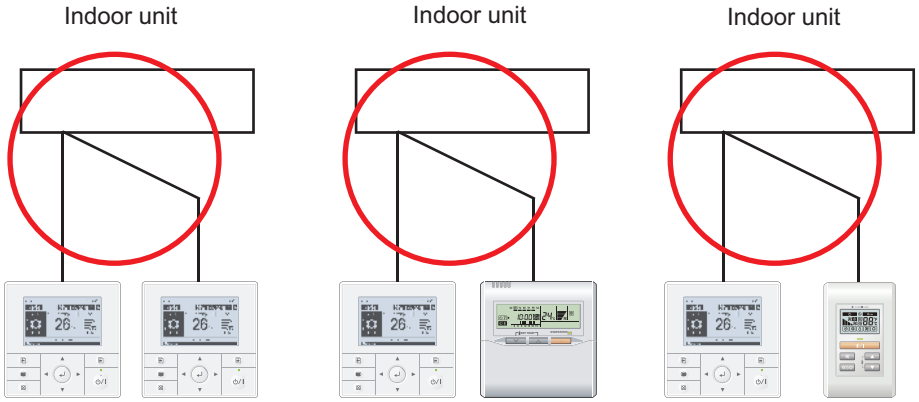

UTY-RVNYM UTY-RVNYM UTY-RVNYM UTY-RNNYM UTY-RVNYM UTY-RSNYM

4-5 UNIT
MULTI-SPLIT TYPE

■ Specifications

Unit: mm

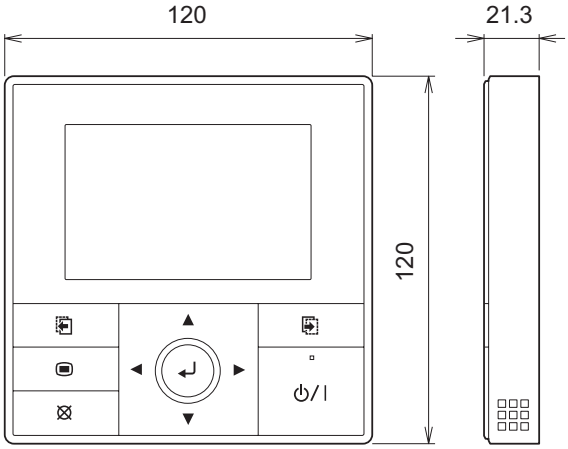

Front view Side view

Size (H × W × D)	mm	120 × 120 × 21.3
Weight	g	220

● Wiring specifications

Use	Cable size	Wire type	Remarks
Remote controller cable	0.33 mm^2	Polar 3 core	Use sheathed PVC cable.

4-5 UNIT
MULTI-SPLIT TYPE

■ Installation (Remote control main unit)

Installation space:

Unit : mm

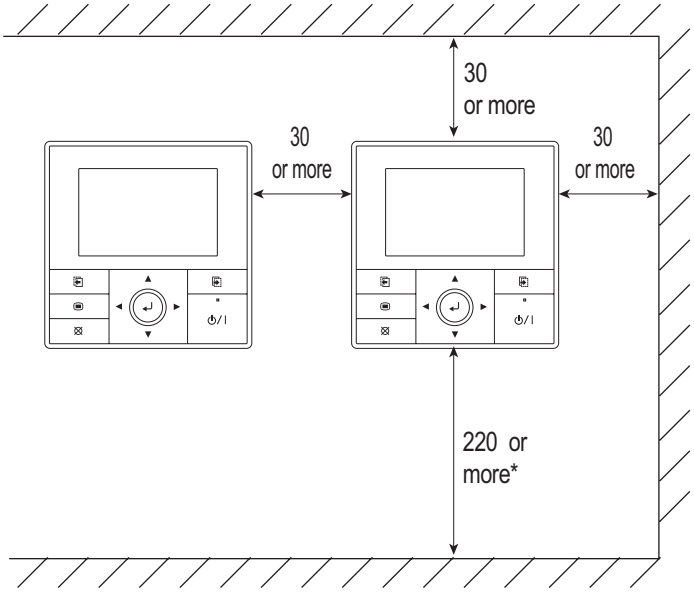

NOTE: Secure enough space where a flat-blade screwdriver to remove the case can be inserted.

Installation procedures:

1. Process the remote controller cable.

Unit : mm

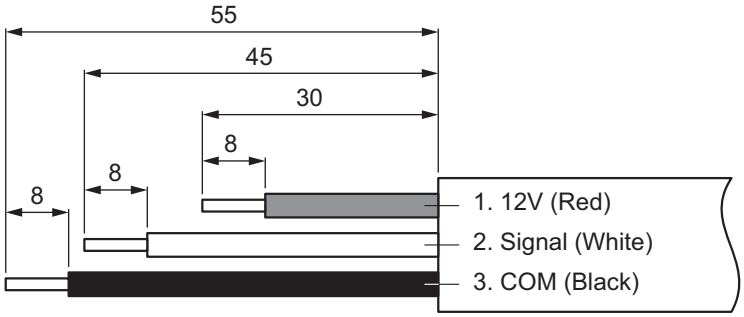

2. Insert the flat-blade screwdriver and twist it slightly to separate the front case and rear case.

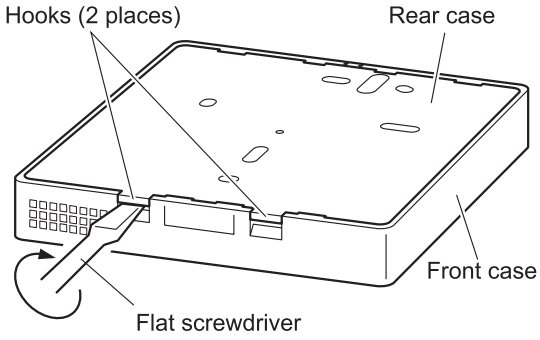

4-5 UNIT MULTI-SPLIT TYPE

3. Attach the remote controller.
   - **When attaching to switch box:**
     a. Seal the wiring hole of the remote controller cable.
     b. Put a remote controller cable through the hole of the rear case.
     c. Fix the rear case by securing it with attached screws (2 places).

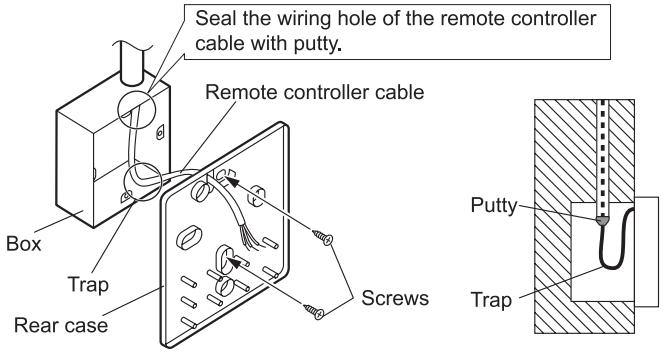

   - **When attaching to the wall directly:**
     a. Seal the wiring hole of the remote controller cable.
     b. Put a remote controller cable through the back hole of the rear case of the main body.
     c. Fix the rear case by securing it with attached screws (2 places).

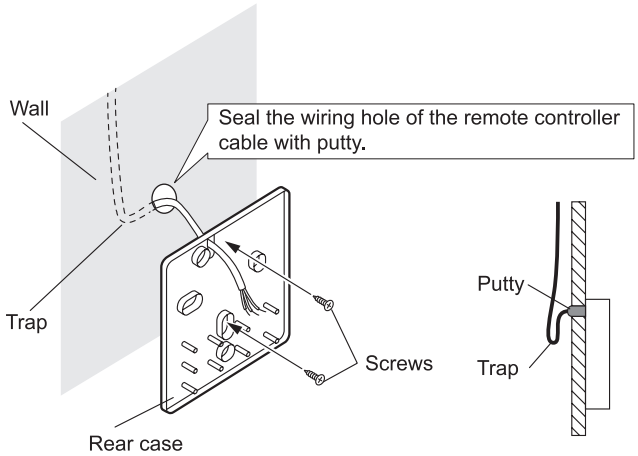

   - **When routing the cable on-wall:**
     a. Cut off the cable guide of the front case with using a knife or a nipper.
     b. Deburr the edge of the cable guide.

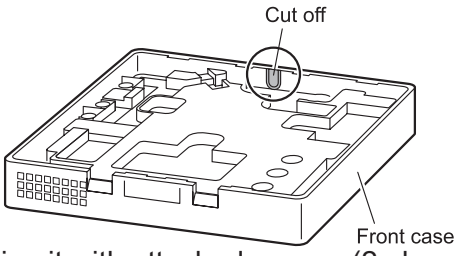

     c. Fix the rear case by securing it with attached screws (2 places).

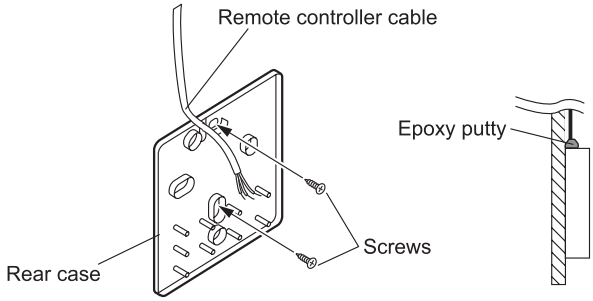

4. Connect the cable to the terminals on the front case.
   Fix the cable together with the sheath with the cable tie. Cut off the excess cable tie.

Tightening torque	
Terminal screw	0.8 to 1.2 N•m

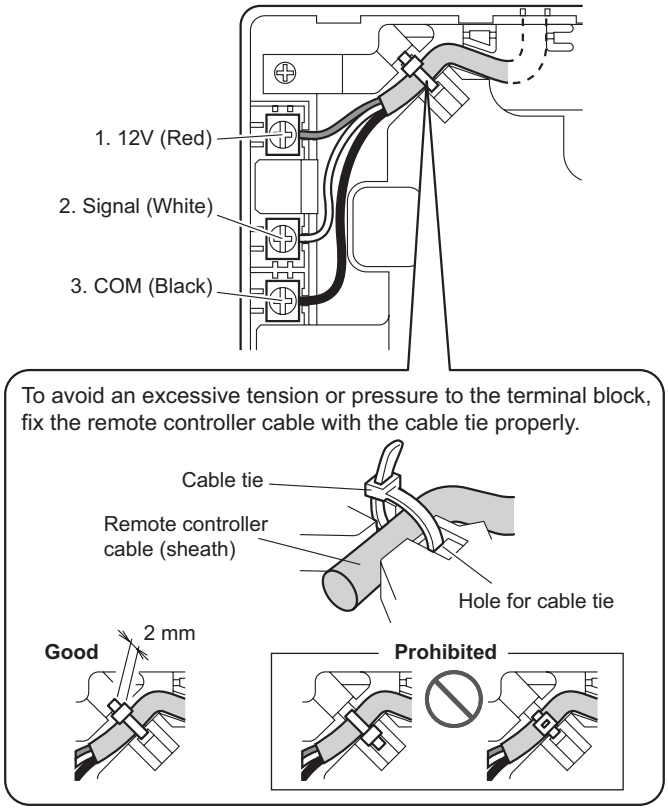

⚠ CAUTION

- Be careful to avoid breaking the cable by over-tightening the cable tie.
- When connecting the remote controller cables, do not over-tighten the screws.

5. Attach the front case.
   - Insert after adjusting upper part of front case.
   - When insert the front case, do not pinch the cable.

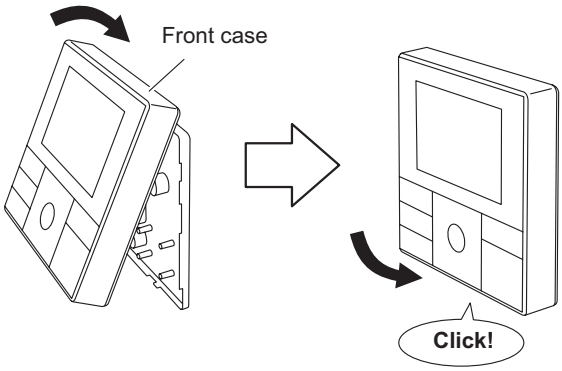

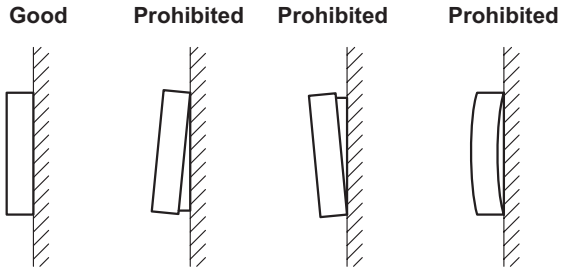

⚠ CAUTION

Insert the upper case firmly. If improperly attached, it will cause the upper case to fall off.

■ Installation

Connection pattern of wired remote controller varies by the type of the connected indoor unit.

● When connecting to terminal block (for Compact cassette, Slim duct, and Mini duct types)

Connect the end of remote controller cable directly to the exclusive terminal block.

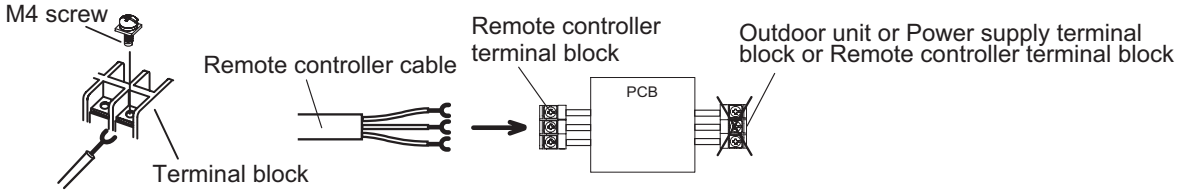

NOTE: It may be failed if it is connected to the outdoor unit or the terminal block for power supply.

14-12. Wired remote controller (UTY-RNRYZ*: Optional part)

■ Overview

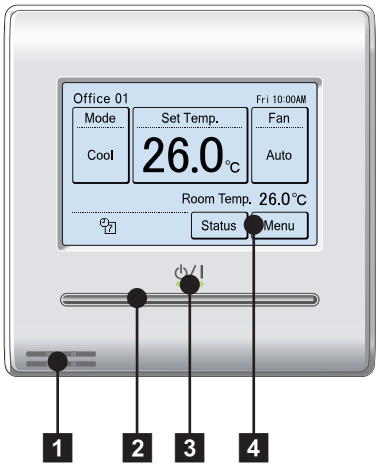

Display panel

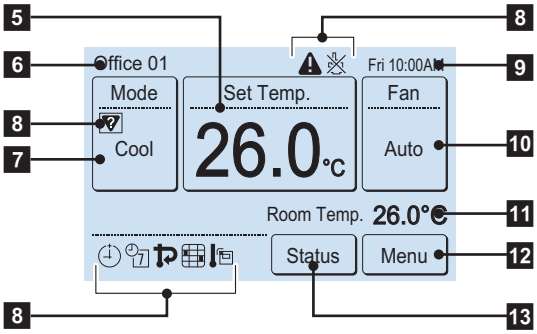

1 Remote temperature sensor (inside)

2 On/off button

Operable only while displaying the “Monitor mode” screen.

3 LED lamp (operation indicator)

4 Touch panel display

5 Set temperature

Operating temperature can be set.

6 Remote controller group name

7 Mode

Operation mode can be set.

8 Status icons

9 Clock

10 Fan

Fan speed can be set.

11 Room temperature

12 Menu

Various settings can be set.

13 Status

Status of the indoor unit and error can be checked.

NOTE: Functions may differ by type of the indoor unit. For details, refer to the operation manual.

■ System diagram

1 remote controller: **2 remote controllers:**

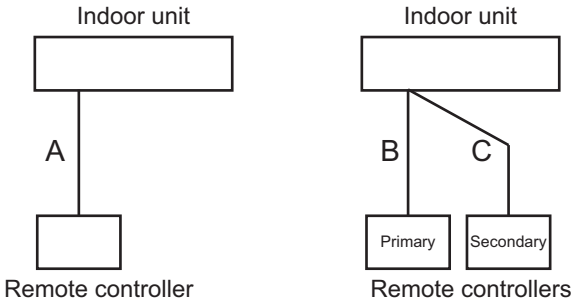

A, B, C: Remote controller cable
A ≤ 500 m;B + C ≤ 500 m

■ Electrical wiring

1 remote controller:

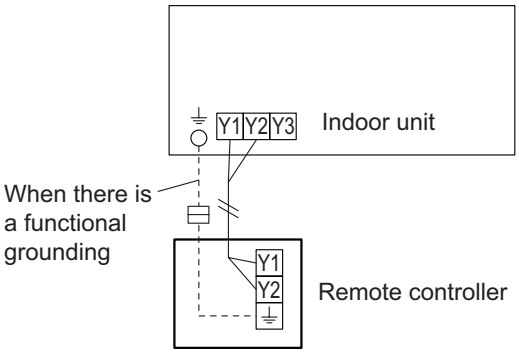

2 remote controllers:

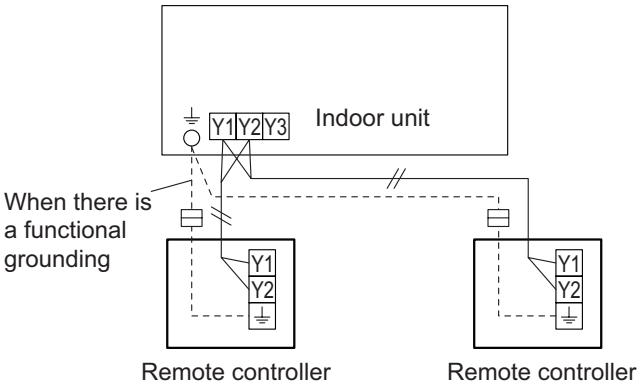

Group control:

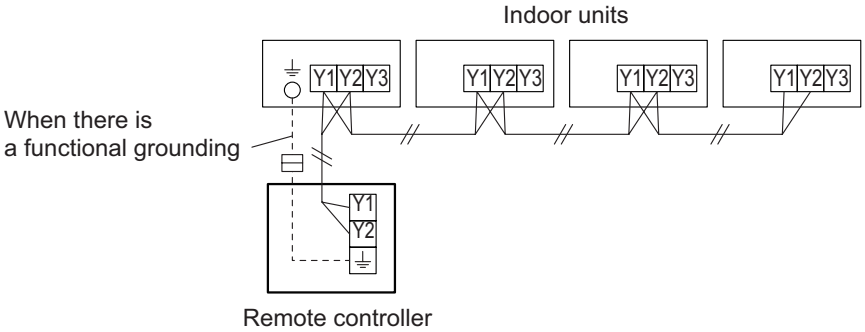

NOTE: Group connection with Polar 3-wired remote controller is not allowed.

4-5 UNIT MULTI-SPLIT TYPE

■ Specifications

Dimensions and other specifications on the wired remote controller are as follows.

Unit: mm

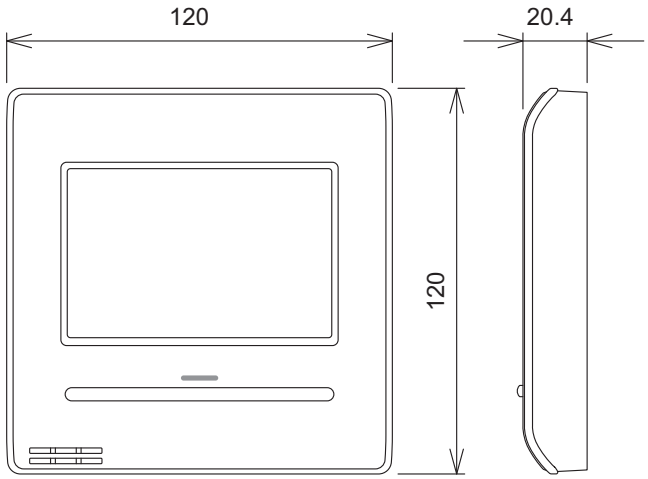

Model name	UTY-RNRYZ*

Display	3.8-inch FSTN LCD (255 × 160 dots) with touch panel	
Dimensions (H × W × D)	mm	120 × 120 × 20.4
Weight	g	220
Input voltage	V	DC 12
Power consumption	W	Max. 0.3
Usage temperature range	°C	0 to 40
Usage humidity range	%	20 to 90 (no condensation)
Storage temperature range	°C	-10 to 60
Storage humidity range	%	20 to 90 (no condensation)

● Wiring specifications

Use	Cable size	Wire type	Remarks
Remote controller cable	0.33 to 1.25 mm^2	Non-polar 2-core, Twisted pair	Use sheathed PVC cable.

■ Installation

Connect the end of remote controller cable directly to the exclusive terminal block.

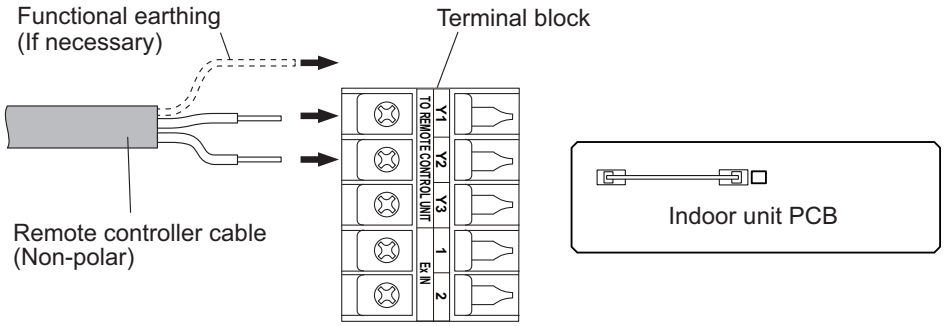

4-5 UNIT
MULTI-SPLIT TYPE

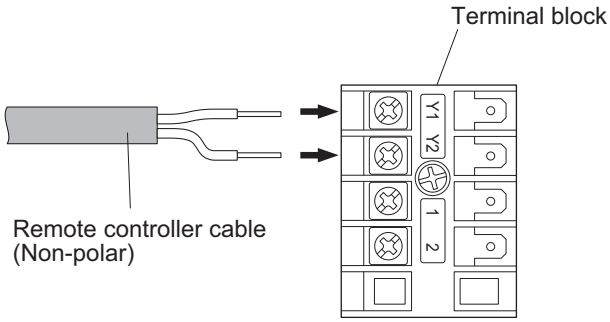

NOTES:

- The detailed shape and the layout of the terminal block and the PCB vary depending on the indoor unit type.
- Operation may fail if it is connected to the outdoor unit or the terminal block for power supply.

4-5 UNIT
MULTI-SPLIT TYPE

14-13. Wired remote controller (UTY-RCRYZ1: Optional part)

■ Overview

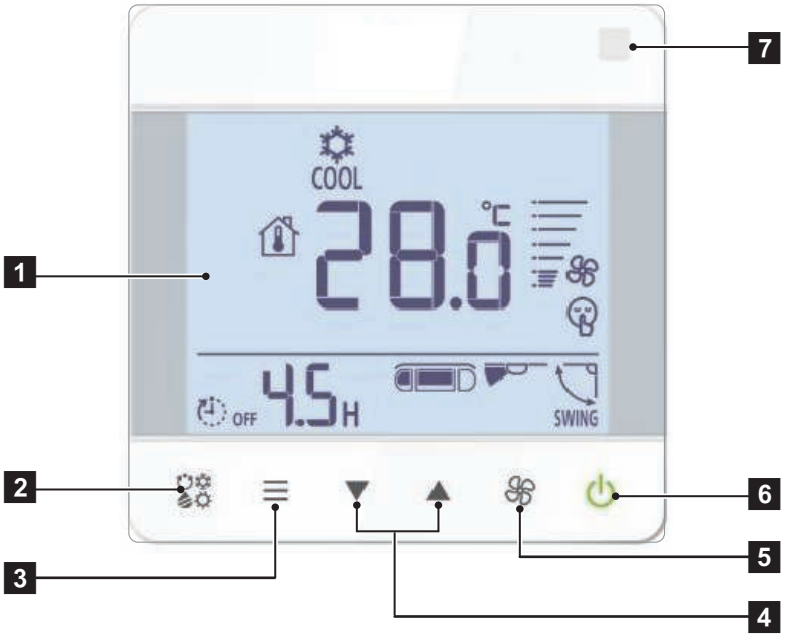

1 Display panel
2 MODE button
3 Menu button
4 ▼, ▲ buttons (Set temperature buttons)
5 FAN button
6 On/off button
7 Wireless remote controller signal receiving section

4-5 UNIT
MULTI-SPLIT TYPE

■ System diagrams

- **Single remote control**

Remote controller cable
A ≤ 500 m

■ Electrical wiring

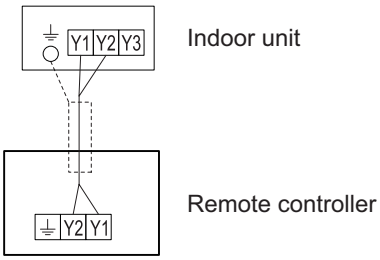

■ Specifications

Unit: mm

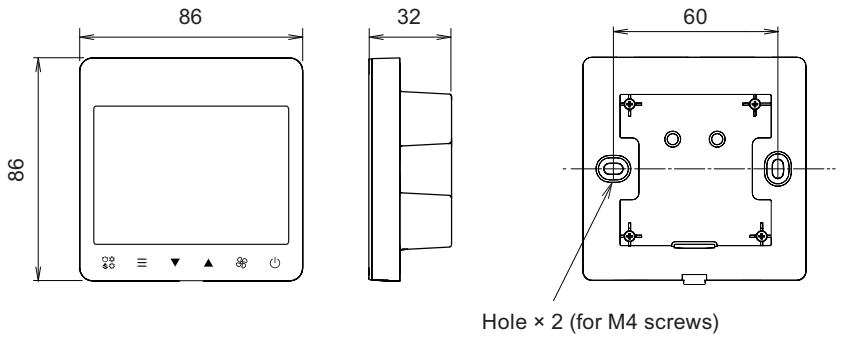

Size (H × W × D)	mm	86 × 86 × 32
Weight	g	135

● Wiring specifications

Use	Cable size	Wire type	Remarks
Remote controller cable	0.33 to 1.25 mm^2 (22 to 16 AWG)	Non polar 2-core	Use sheathed twist pair cable.*

*: Use shielded cable (locally purchased) in accordance with the regional cable standard.

■ Installation

- **Connection pattern**

NOTE: Connection pattern is different according to type of Indoor unit.

Indoor unit type	Connection pattern
All cassette type	Pattern A
All duct type	Pattern A
All ceiling type	Pattern A
Compact floor type	Pattern A
Wall mounted type	Pattern B

- **Pattern A**
  1. Connect the end of remote controller cable directly to the exclusive terminal block.
  2. Set the DIP switch (SW1) to “2WIRE” on the PCB of the indoor unit.

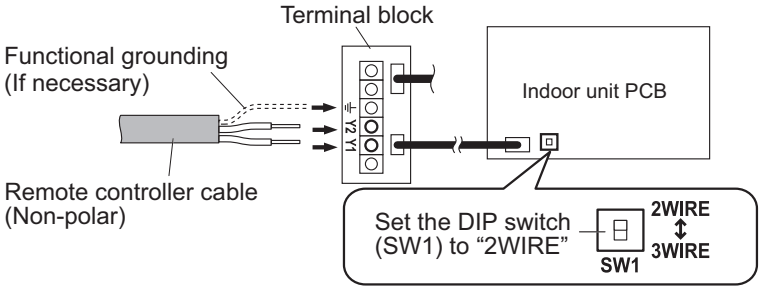

NOTES:
- Layout of terminal block and PCB is varies depending on the type of indoor unit.
- Operation may fail if it is connected to the outdoor unit or the terminal block for power supply.

- **Pattern B**
  1. Use a tool to cut off the terminal on the end of the remote controller cable, and then remove the insulation from the cut end of the cable as shown below.

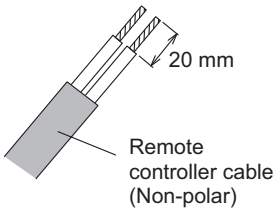

  2. Connect the remote controller cable and connecting cable as shown below. Be sure to insulate the connection between the cables.

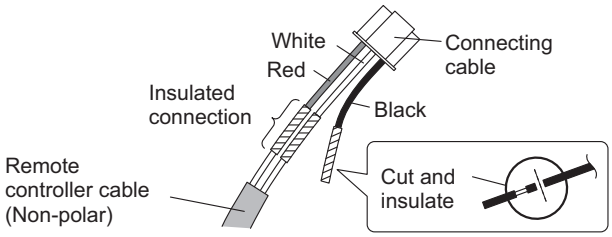

  3. Connect the remote controller cable to the connecting cable, and insert it to the connector. Set the DIP switch (SW1) to “2WIRE” on the PCB of the indoor unit.

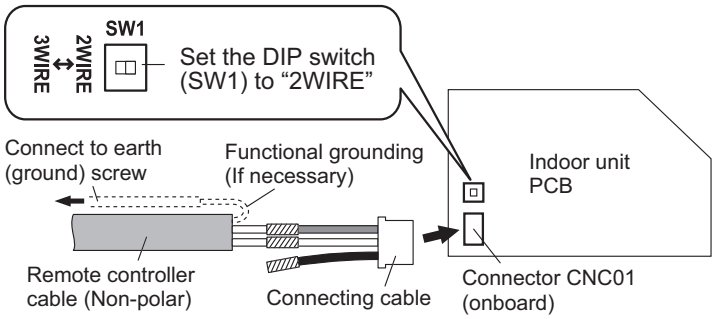

NOTE: Layout of terminal block and PCB is varies depending on the type of indoor unit.

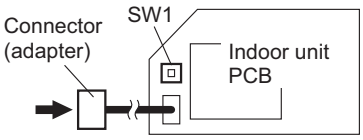

4-5 UNIT
MULTI-SPLIT TYPE

14-14. Simple remote controller (UTY-RSNYM: Optional part)

■ Overview

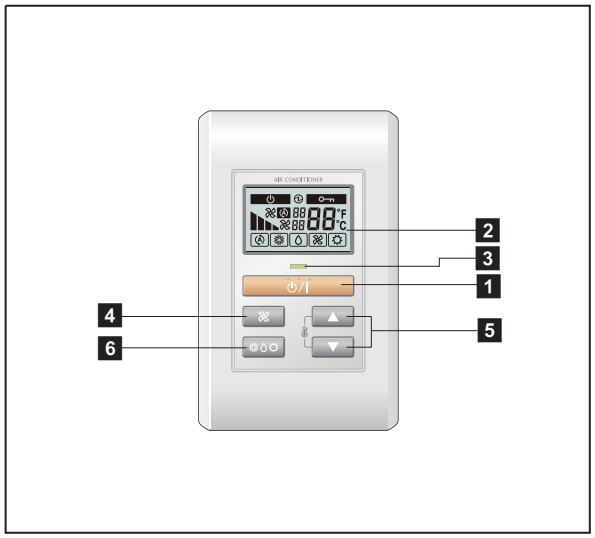

Display panel

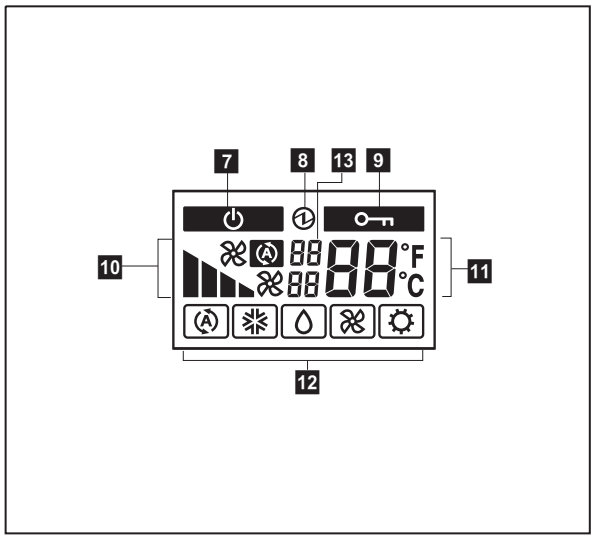

1 START/STOP button

Starts and stops operation.

2 Display backlight button

Lights during operation.

3 Operation lamp

Lights during operation.

4 FAN button

Selects the fan speed (AUTO, HIGH, MED, LOW, and QUIET).

5 SET TEMP. button

Selects the setting temperature.

6 MODE button

Selects the operating mode (AUTO, COOL, DRY, FAN, HEAT).

7 Standby indicator

Indicates during the oil recovery and defrosting operation.

8 Power source indicator

Indicates the main power is on.

9 Central control indicator

Indicates when function is locked.

10 Fan speed indicator

Deletes the weekly timer schedule.

11 Set temperature

- Indicates error history number in error code history display mode.
- Indicates indoor unit address in address display mode.

12 Operating mode indicator

13 Indicator

- Upper:
  - Indicates the error code in error code history display mode and in self diagnosis mode.
  - Indicates the refrigerant system address in address display mode.
- Lower: Indicates the remote controller address in error code history display mode, address display mode, and self diagnosis mode.

4-5 UNIT
MULTI-SPLIT TYPE

■ System diagram

1 remote controller: **2 remote controllers:**

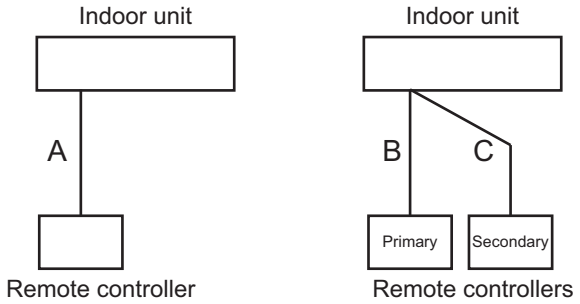

A, B, C: Remote controller cable
A ≤ 500 m;B + C ≤ 500 m

■ Electrical wiring

1 remote controller:

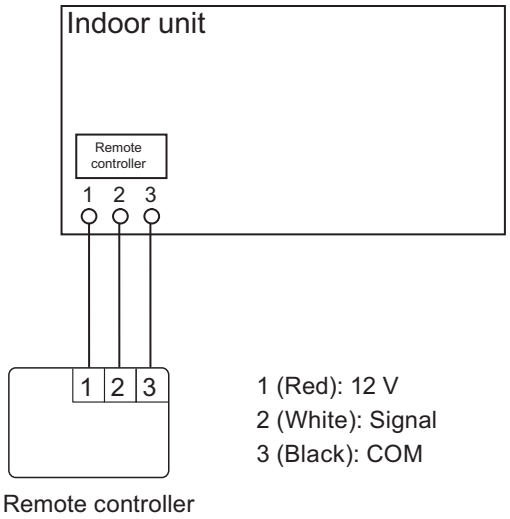

1 (Red): 12 V
2 (White): Signal
3 (Black): COM

2 remote controllers:

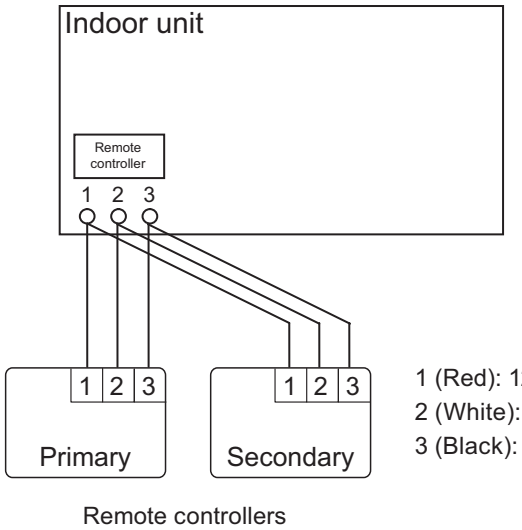

1 (Red): 12 V
2 (White): Signal
3 (Black): COM

4-5 UNIT
MULTI-SPLIT TYPE

■ Specifications

Dimensions and other specifications on the wired remote controller are as follows.

Unit: mm

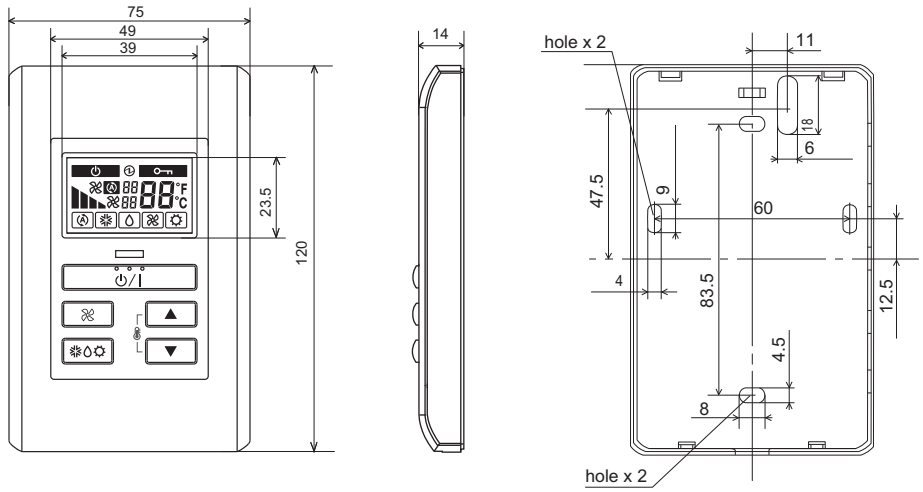

Front View Side View Rear View

Size (H × W × D)	mm	120 × 75 × 14
Weight	g	90
Cable length (accessory)	m	10
Power	V	12

● Wiring specifications

Use	Size	Wire type	Remarks
Remote controller cable	0.33 mm^2	Polar 3 core	Use sheathed PVC cable.

■ Installation

Connection pattern of wired remote controller varies by the type of the connected indoor unit.

● When connecting to terminal block (for Compact cassette, Slim duct, and Mini duct types)

Connect the end of remote controller cable directly to the exclusive terminal block.

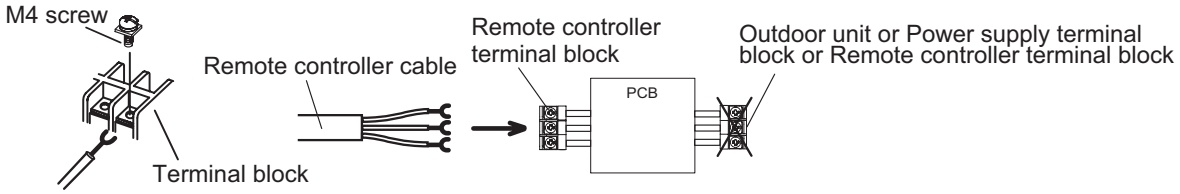

NOTE: It may be failed if it is connected to the outdoor unit or the terminal block for power supply.

14-15. Simple remote controller (UTY-RSRY and UTY-RHRY: Optional parts)

■ Overview

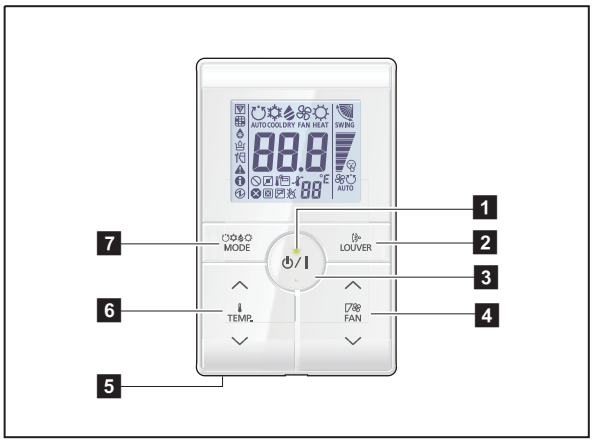

Display panel

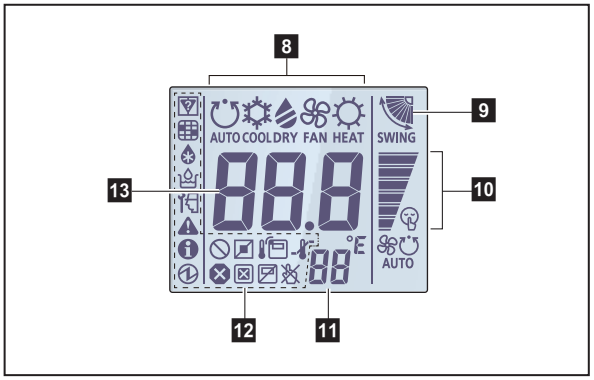

1: Available only for UTY-RSR.
*2: Not available for a heat pump model unless it is set up as an administrative indoor unit.
*3: Not available for a heat pump model.
*4: Not available for a cooling-only model.
*5: Set the function setting of the indoor unit accordingly.
*6: During address display mode.

1 LED lamp
Lights during operation.

2 Louver button
Adjusts the airflow direction.

3 START/STOP button
Starts and stops operation.

4 FAN control button
Switches the fan speed as follows:

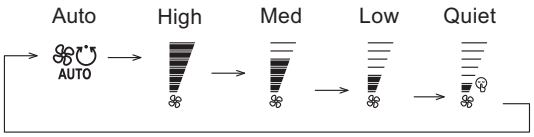

5 Room temperature sensor (inside)
Senses ambient temperature of unit.

6 Set temperature button
Selects the setting temperature. (18—30 °C [COOL], 10—30 °C [HEAT])

7 Operation mode button*1
Switches the operation mode as follows:

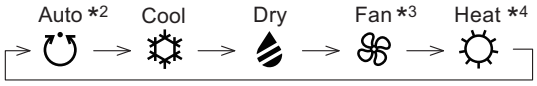

8 Operating mode indicator

9 Airflow direction indicator

10 FAN speed indicator

11 Remote controller address indicator

12 Status icons

- Mode mismatch
- Filter sign *5
- Defrost operation
- Oil recovery operation
- Under maintenance
- Error
- Special state
- Conducting electricity
- Emergency stop
- Operation controlled
- Forced stop
- Remote controller sensor is enabled *5
- Central controlled
- Setting temperature range is enabled
- Operation prohibited

13 Set temperature
Indicates indoor unit address. *6

■ System diagram

1 remote controller: **2 remote controllers:**

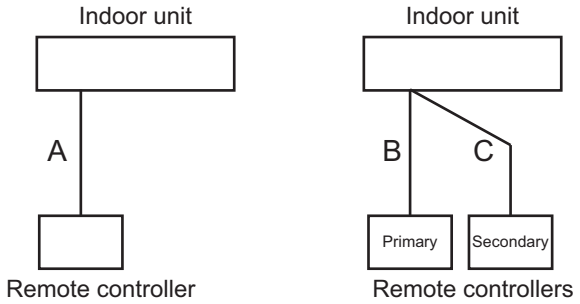

A, B, C: Remote controller cable
A ≤ 500 m;B + C ≤ 500 m

■ Electrical wiring

1 remote controller:

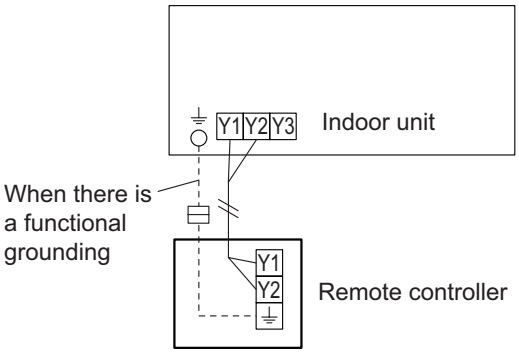

2 remote controllers:

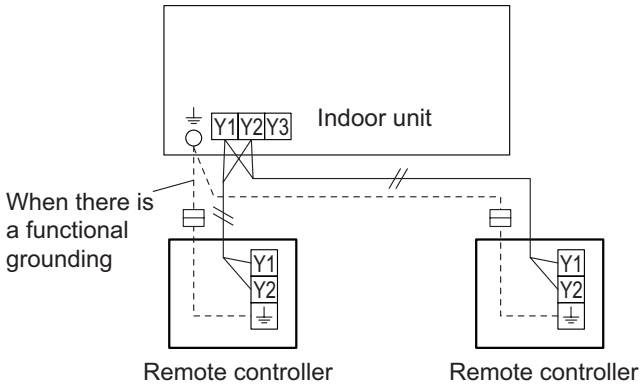

Group control:

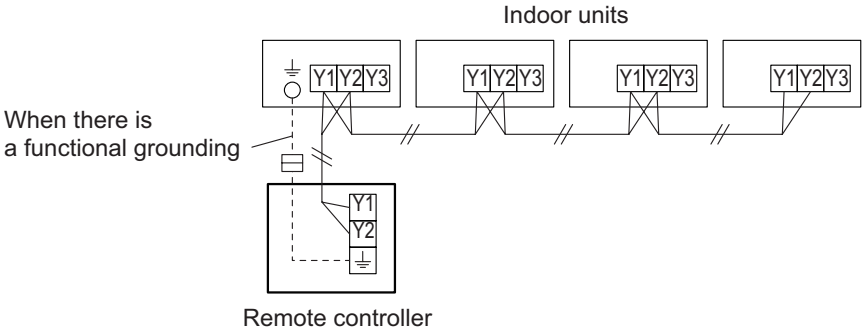

NOTE: Group connection with Polar 3-wired remote controller is not allowed.

4-5 UNIT
MULTI-SPLIT TYPE

■ Specifications

Dimensions and other specifications on the wired remote controller are as follows.

Unit: mm

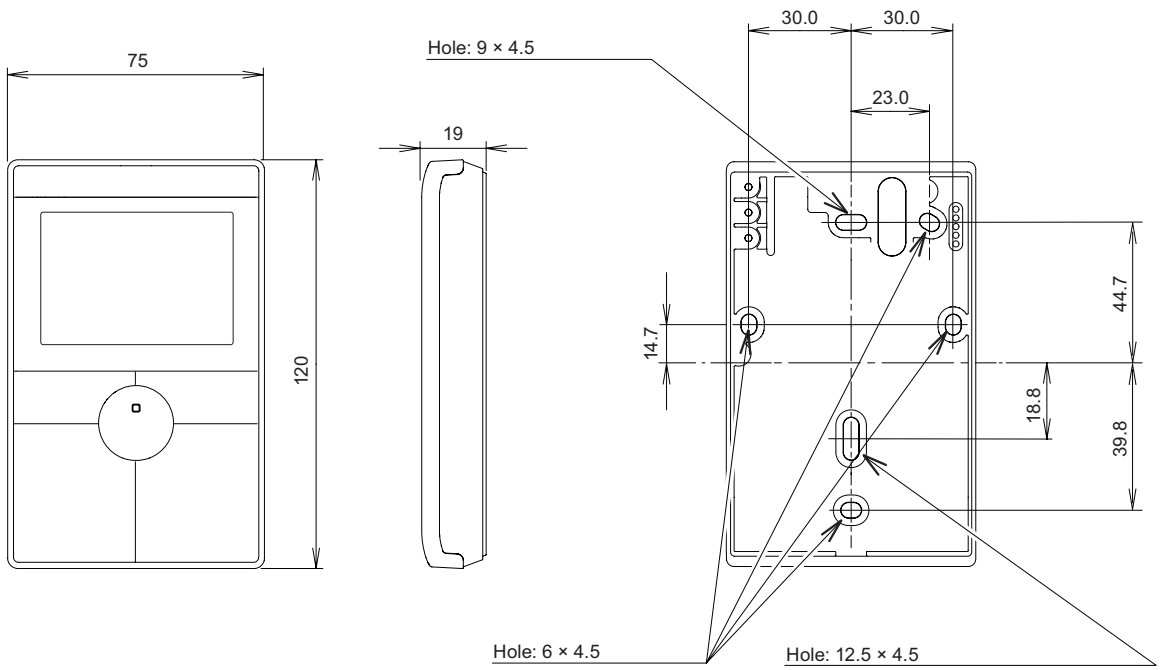

Front View Side View Rear View

Size (H × W × D)	mm	120 × 75 × 19
Weight	g	120
Cable length (accessory)	m	10
Power	V	12

● Wiring specifications

Use	Cable size	Wire type	Remarks
Remote controller cable	0.33 to 1.25 mm^2	Non-polar 2-core, Twisted pair	Use sheathed PVC cable.

■ Installation

Connect the end of remote controller cable directly to the exclusive terminal block.

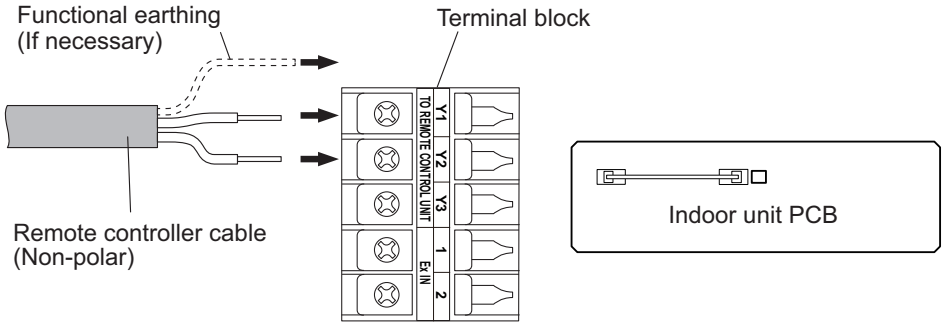

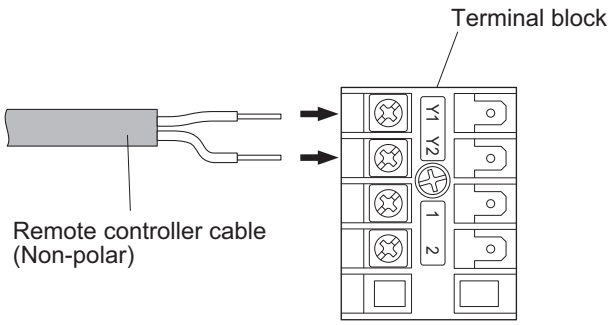

4-5 UNIT
MULTI-SPLIT TYPE

NOTES:

- The detailed shape and the layout of the terminal block and the PCB vary depending on the indoor unit type.
- Operation may fail if it is connected to the outdoor unit or the terminal block for power supply.

4-5 UNIT
MULTI-SPLIT TYPE

15. Function settings

To adjust the functions of this product according to the installation environment, various types of function settings are available.

NOTE: Incorrect settings can cause a product malfunction.

15-1. Compact cassette, Mini duct, Slim duct types indoor unit (setting by DIP switch)

By using some components on the PCB, you can change the function settings.

Related components on the PCB and the applicable settings:

Component			Setting content
DIP switch	SW100	1	Remote controller address setting
		2	
		3	
		4	
	SW101	1	Drainage function setting
		2	Auto louver grille setting
		3	Fan delay setting

■ Component location

Components on the indoor unit main PCB used for the function settings are located as shown in the following figure.

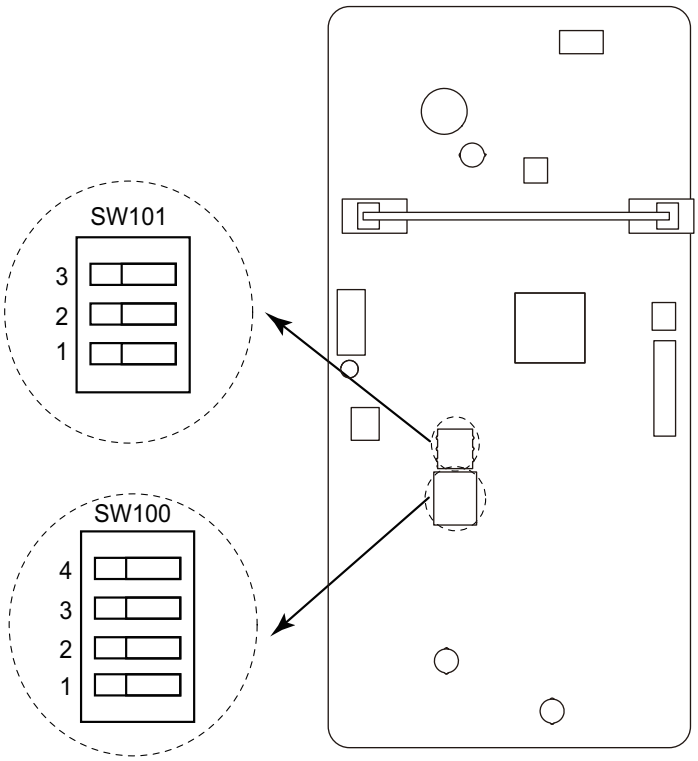

4-5 UNIT MULTI-SPLIT TYPE

■ DIP switch setting

- **SW100: Remote controller address setting**
  When operating a number of indoor units by using a wired remote controller, DIP switch setting for assigning unit number to each indoor unit is required.
  The slide switches are normally set to make the unit number 00.

Remote controller address	Switch number				Factory setting
	1	2	3	4	
00	OFF	OFF	OFF	OFF	♦
01	ON	OFF	OFF	OFF	
02	OFF	ON	OFF	OFF	
03	ON	ON	OFF	OFF	
04	OFF	OFF	ON	OFF	
05	ON	OFF	ON	OFF	
06	OFF	ON	ON	OFF	
07	ON	ON	ON	OFF	
08	OFF	OFF	OFF	ON	
09	ON	OFF	OFF	ON	
10	OFF	ON	OFF	ON	
11	ON	ON	OFF	ON	
12	OFF	OFF	ON	ON	
13	ON	OFF	ON	ON	
14	OFF	ON	ON	ON	
15	ON	ON	ON	ON	

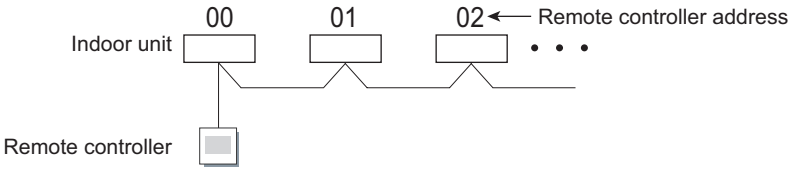

- **SW101-Switch 1: Drainage function setting**

Switch 1	Drainage function	Factory setting
ON	Disabled	
OFF	Enabled	♦

- **SW101-Switch 2: Auto louver grille setting**
  When Auto Louver Grille Kit (optional parts) is attached, set to “Enabled”.

Switch 2	Auto louver grille setting	Factory setting
ON	Enabled	
OFF	Disabled	♦

- **SW101-Switch 3: Fan delay setting**
  When the indoor unit is stopped while operating in conjunction with auxiliary heater, the indoor unit fan operation will continue for 1 minute.

Switch 3	Fan delay	Factory setting
ON	Enabled	
OFF	Disabled	♦

15-2. Medium static pressure duct type (ARXH12–22KMTAP)

By using some components on the PCB, you can change the function settings.

Related components on the PCB and the applicable settings

Component		Setting content
DIP switch101	1	Drainage function setting
	2	Setting change prohibited
	3	Fan delay setting
	4	Setting change prohibited

● Component location

Components on the indoor unit main PCB used for the function settings are located as shown in the following figure.

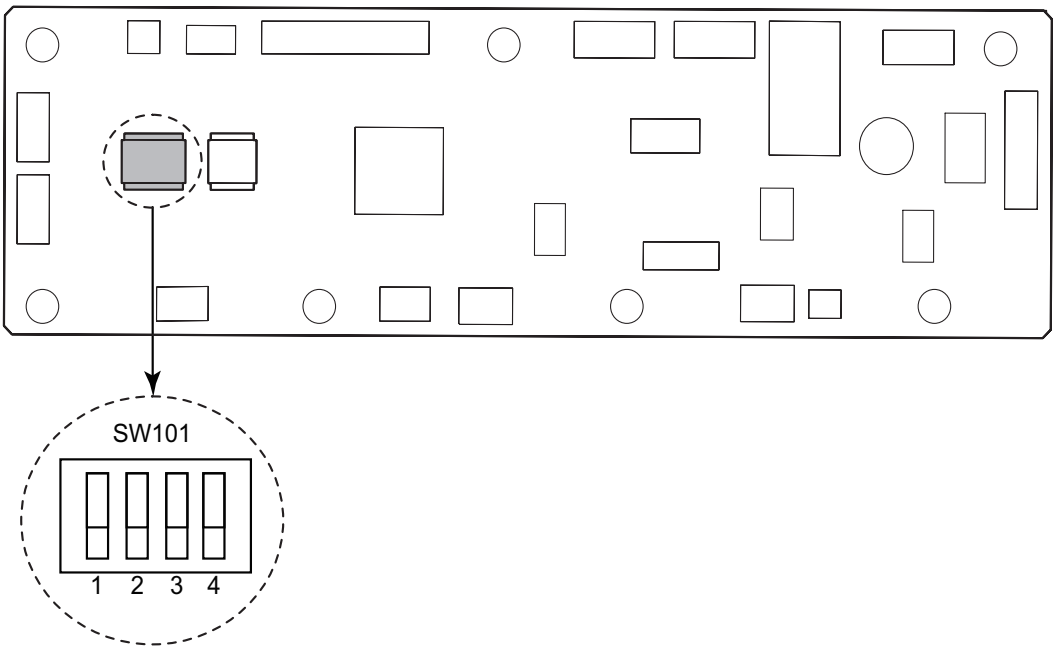

● DIP switch setting

- **Switch 1: Drainage function setting (SW101)**

Switch 1	Drainage function	Factory setting
ON	Disabled	
OFF	Enabled	♦

- **Switch 2: Setting change prohibited (SW101)**

- **Switch 3: Fan delay setting (SW101)**
  When the indoor unit is stopped while operating in conjunction with auxiliary heater, the indoor unit fan operation will continue for 1 minute.

Switch 3	Fan delay	Factory setting
ON	Enabled	
OFF	Disabled	♦

- **Switch 4: Setting change prohibited (SW101)**

4-5 UNIT
MULTI-SPLIT TYPE

15-3. Indoor unit (setting by wireless remote controller)

⚠ CAUTION

This setting changes the function settings used to control the indoor unit according to the installation conditions. Incorrect settings can cause a product malfunction.

- After the power is turned on, perform the “Function setting” according to the installation conditions using the remote controller.
- The settings may be selected between the following two: Function number or Setting number.
- Settings will not be changed if invalid numbers or setting numbers are selected.

■ Preparation

Before connecting the power supply of the indoor unit, reconfirm following items:

- Piping air tightness test and vacuuming have been performed firmly.
- There is no wiring mistake. Then, connect the power supply of the indoor unit.

■ AR-REW3E (for Wall mounted type KGTG), AR-REW4E (for Wall mounted type KETF[-B]), AR-REW2E (for Wall mounted type KMTE), and AR-REM7E (for Floor type)

● Button name and function

During address setting mode, indoor unit reject the any operation command from remote controller.

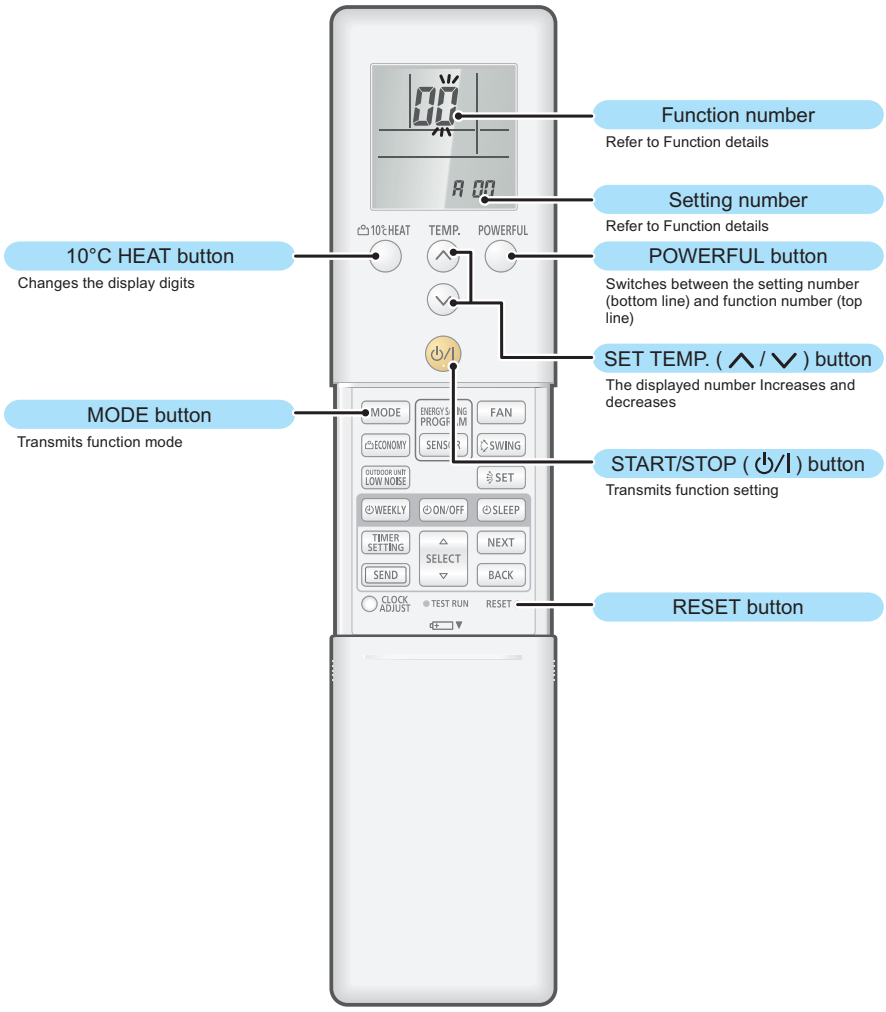

NOTE: The number of buttons varies by the remote controller model.

4-5 UNIT
MULTI-SPLIT TYPE

● Function setting procedure

1. Connect the power supply of the outdoor unit.
2. To enter the function setting mode, while holding down the POWERFUL and TEMP.∧ button, press the RESET button.

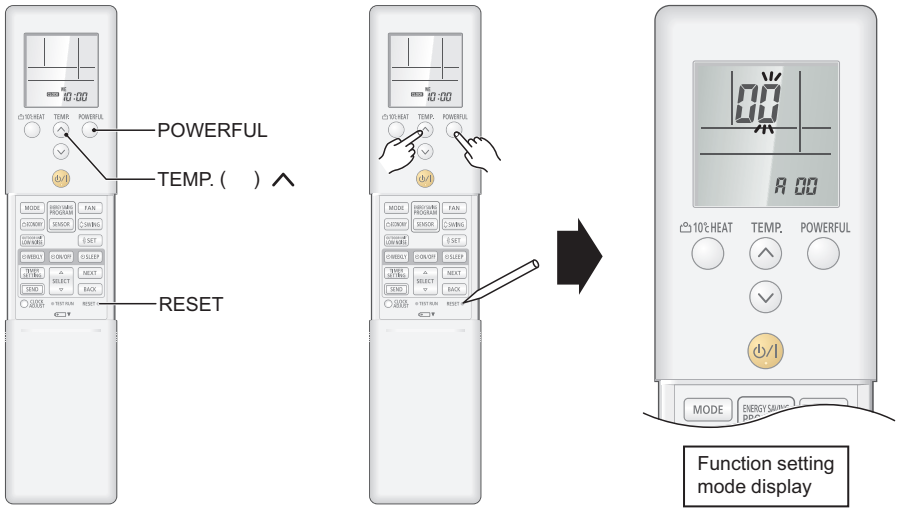

3. Select the function number by pressing the ∧ or the ∨ buttons. Each time the 10 °C HEAT button is pressed, it switches between the right digit and the left digit.

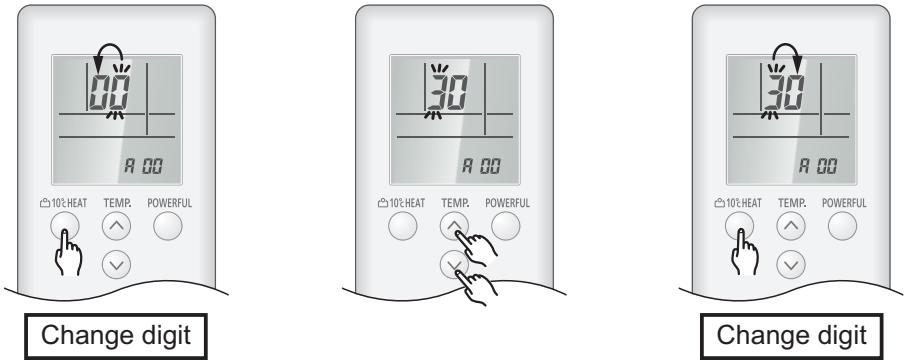

4. Proceed to the setting number by pressing the POWERFUL button. (To return to the function number selection, press the POWERFUL button again.)

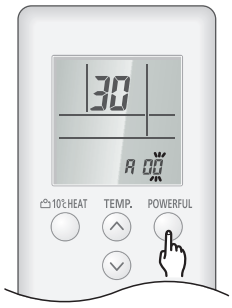

5. Select the function number by pressing the ∧ or the ∨ button. Each time the 10 °C HEAT button is pressed, it switches between the right digit and the left digit.

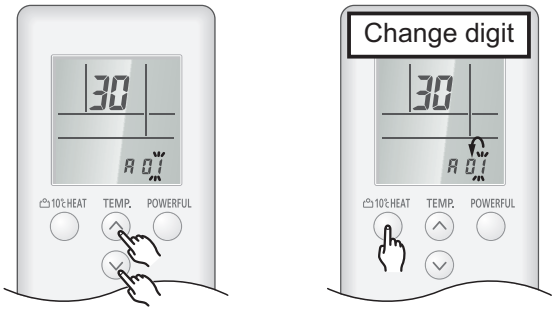

6. Press the MODE button once to transmit the function mode information.

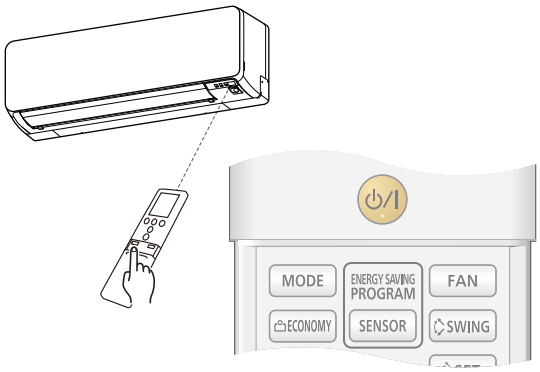

7. Press the ⏻/I button once to transmit the function setting information. 2 short beeps will be emitted from the indoor unit when the signal is received correctly. If wrong code is set, no beep sound will be emitted.

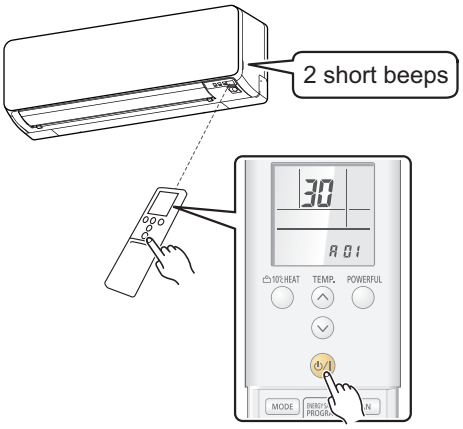

NOTE: Press ⏻/I button within 30 seconds after pressing MODE button.

For the function details, refer to Chapter 15-6. "Function details" on page 325.

8. Exit the function setting mode by pressing the RESET button.

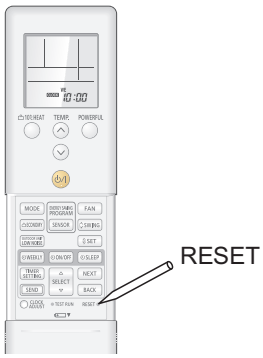

● Setting up each indoor unit

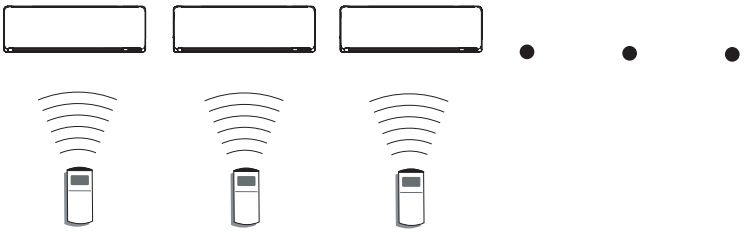

Repeat step from 1. to 8. to set up each indoor unit. If the custom code is other than "A", steps from 1. to 2. and 8. need to be performed.

4-5 UNIT
MULTI-SPLIT TYPE

● Resetting the power after setting up all indoor units

Important:

- If the reset is not performed, function cannot be read correctly.
- After all the functions have been set, the circuit breaker needs to be switched off for at least 2 minutes.
  - After the 2 minutes has passed, power can be restored.
  - The set function is stored in the PCB and will remain in memory even when the power of indoor unit is turned off.
    However setting function is effective after disconnecting the power supply and then reconnecting it.
- Record the latest configuration of the indoor unit function setting on a label, and put the label on the unit so it can be used for after-sales service operations.

Once the RESET button is pressed on the remote controller, the operation mode will be set to the AUTO MODE.

Adjust the operation mode to either cooling or heating before starting the operation of the air conditioner.

NOTE: If custom code other than "A" is set, the remote control must be set accordingly to the indoor unit setting.

4-5 UNIT
MULTI-SPLIT TYPE

● Remote controller custom code setting

Custom code setting of wireless remote controller needs to be same as the setting of the indoor unit. When you change the custom code setting of the wireless remote controller, do as follows:

1. Press the START/STOP button until only the clock is displayed on the display.

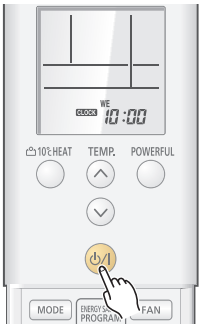

2. Press the MODE button for at least 5 seconds to display the current custom code (initially set to A).

3. Press the TEMP. “ ∧ “ or the “ ∨ ” button to change the custom code between A →b →c →d.

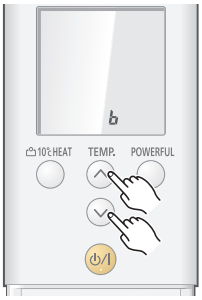

4. Press the MODE button again to return to the clock display. The custom code will be changed.

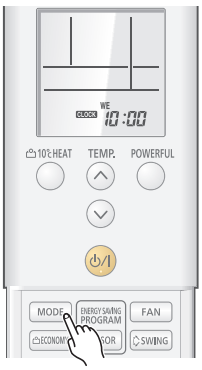

- If no buttons are pressed within 30 seconds after the custom code is displayed, the system returns to the original clock display. In this case, start again from step 1.
- The air conditioner custom code is set to A prior to shipment.
- If you do not know the air conditioner custom code setting, try each of the custom codes (A →b → c →d) until you find the code which operates the air conditioner.

■ AR-RMB1E(-B) (for Wall mounted type KMCG and KMCG-B)

● Button name and function

During address setting mode, indoor unit reject the any operation command from remote controller.

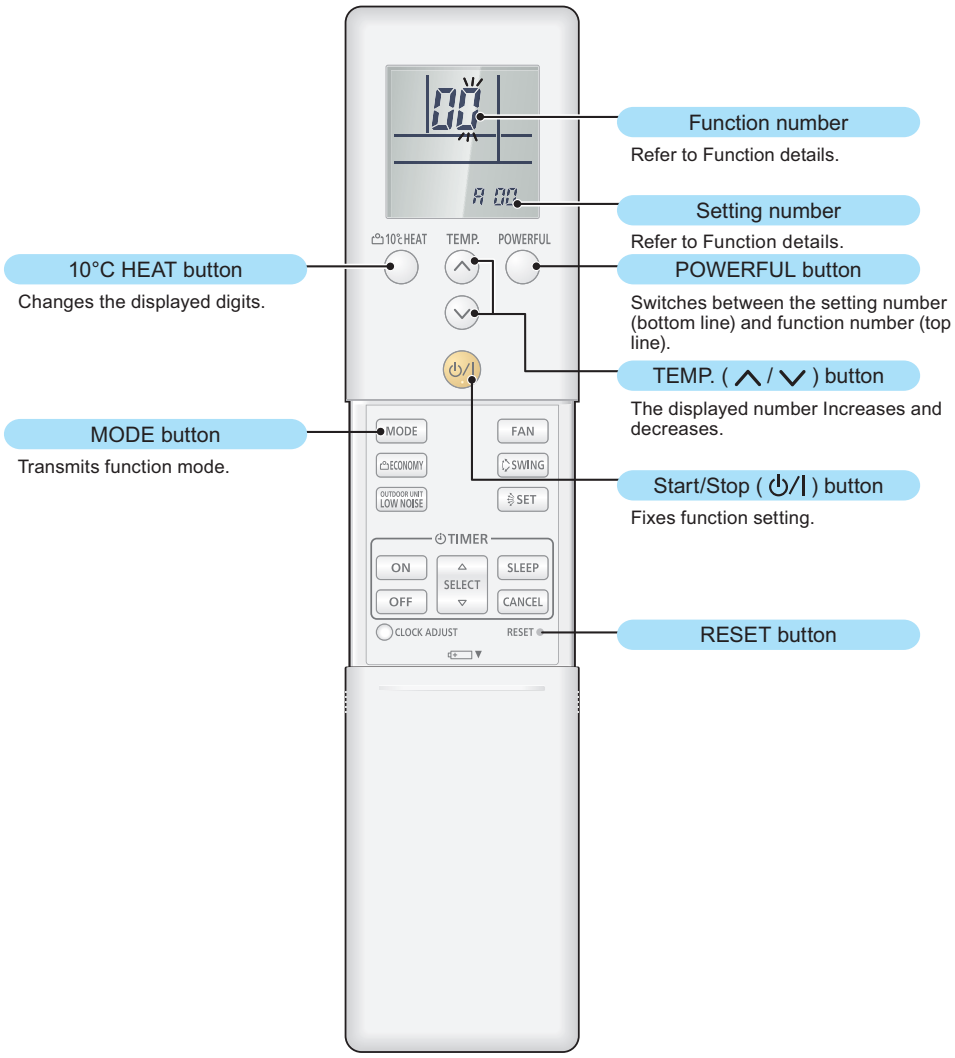

4-5 UNIT
MULTI-SPLIT TYPE

● Function setting procedure

1. Connect the power supply of the outdoor unit.
2. To enter the function setting mode, while holding down the POWERFUL and SET TEMP. ∧ buttons, press the RESET button.

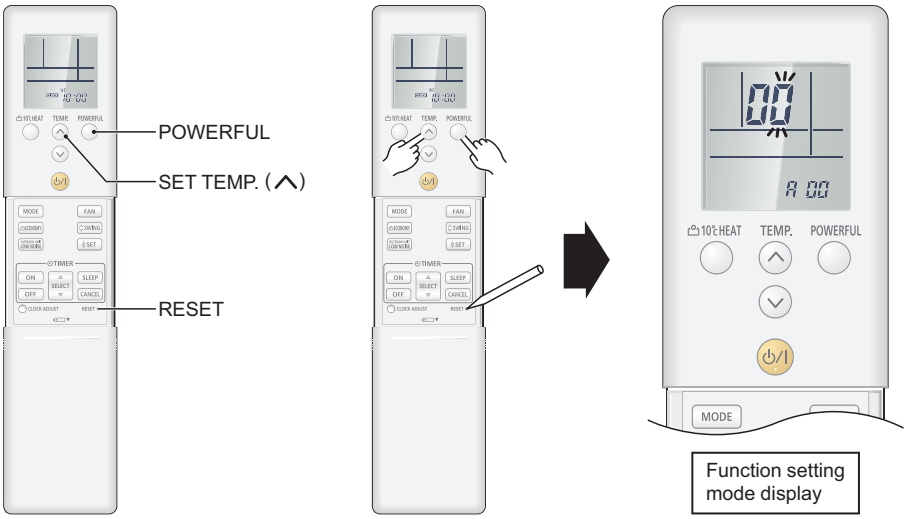

3. Select the function number by pressing the ∧ or the ∨ buttons. Each time the 10°C HEAT button is pressed, it switches between the right digit and the left digit.

4. Proceed to the setting number by pressing the POWERFUL button. (To return to the function number selection, press the POWERFUL button again.)

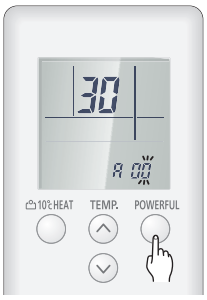

5. Select the function number by pressing the ∧ or the ∨ button. Each time the 10°C HEAT button is pressed, it switches between the right digit and the left digit.

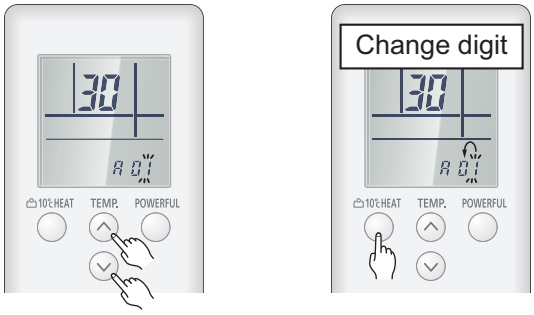

6. Press the MODE button once to transmit the function mode information.

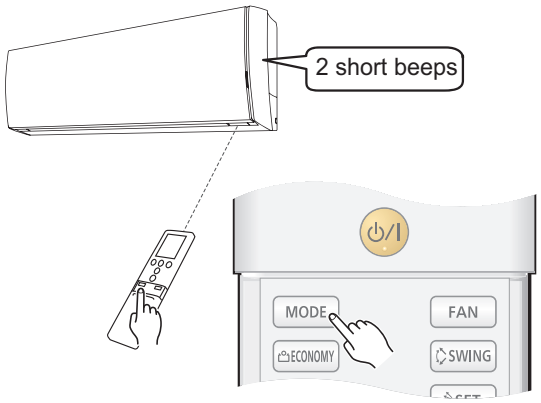

7. Press the ⏻/I button once to transmit the function setting information. 2 short beeps will be emitted from the indoor unit when the signal is received correctly. If wrong code is set, no beep sound will be emitted.

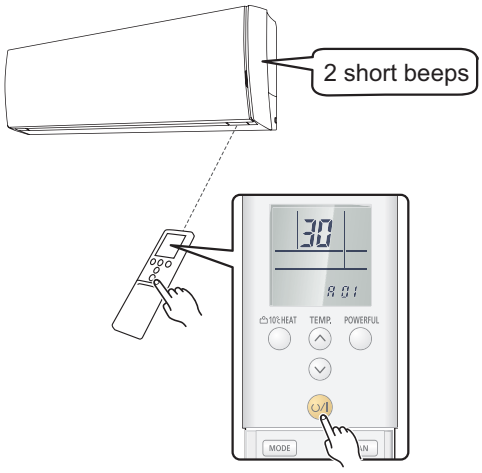

NOTE: Press ⏻/I button within 30 seconds after pressing MODE button.

For the function details, refer to Chapter 15-6. "Function details" on page 325.

8. Exit the function setting mode by pressing the RESET button.

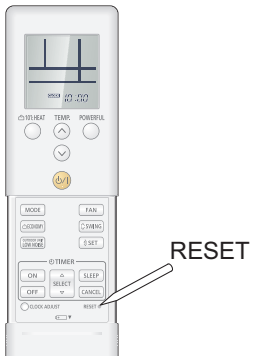

● Setting up each indoor unit

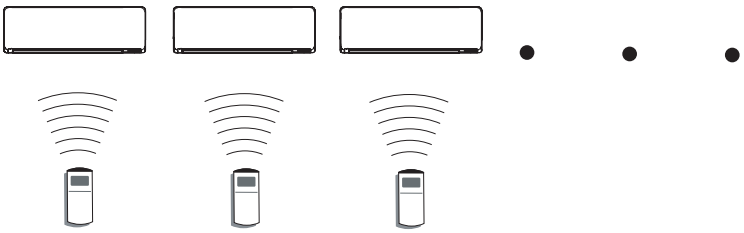

Repeat step from 1. to 8. to set up each indoor unit. If the custom code is other than "A", steps from 1. to 2. and 8. need to be performed.

4-5 UNIT
MULTI-SPLIT TYPE

● Resetting the power after setting up all indoor units

Important:

- If the reset is not performed, function cannot be read correctly.
- After all the functions have been set, the circuit breaker needs to be switched off for at least 2 minutes.
  - After the 2 minutes has passed, power can be restored.
  - The set function is stored in the PCB and will remain in memory even when the power of indoor unit is turned off.
    However setting function is effective after disconnecting the power supply and then reconnecting it.
- Record the latest configuration of the indoor unit function setting on a label, and put the label on the unit so it can be used for after-sales service operations.

Once the RESET button is pressed on the remote controller, the operation mode will be set to the AUTO MODE.

Adjust the operation mode to either cooling or heating before starting the operation of the air conditioner.

NOTE: If custom code other than "A" is set, the remote control must be set accordingly to the indoor unit setting.

4-5 UNIT
MULTI-SPLIT TYPE

● Remote controller custom code setting

Custom code setting of wireless remote controller needs to be same as the setting of the indoor unit. When you change the custom code setting of the wireless remote controller, do as follows:

1. Press the START/STOP button until only the clock is displayed on the display.

2. Press the MODE button for at least 5 seconds to display the current custom code (initially set to A).

3. Press the SET TEMP. “ ∧ ” or the “ ∨ ” button to change the custom code between A →b →c →d.

4. Press the MODE button again to return to the clock display. The custom code will be changed.

- If no buttons are pressed within 30 seconds after the custom code is displayed, the system returns to the original clock display. In this case, start again from step 1.
- The air conditioner custom code is set to A prior to shipment.
- If you do not know the air conditioner custom code setting, try each of the custom codes (A →b → c →d) until you find the code which operates the air conditioner.

■ UTY-LNTY (for Compact cassette type) or AR-REJ1E (included in UTY-LBTYM for Duct type, UTY-LBTYH for Ceiling type)

● Button name and function

During address setting mode, indoor unit reject the any operation command from remote controller.

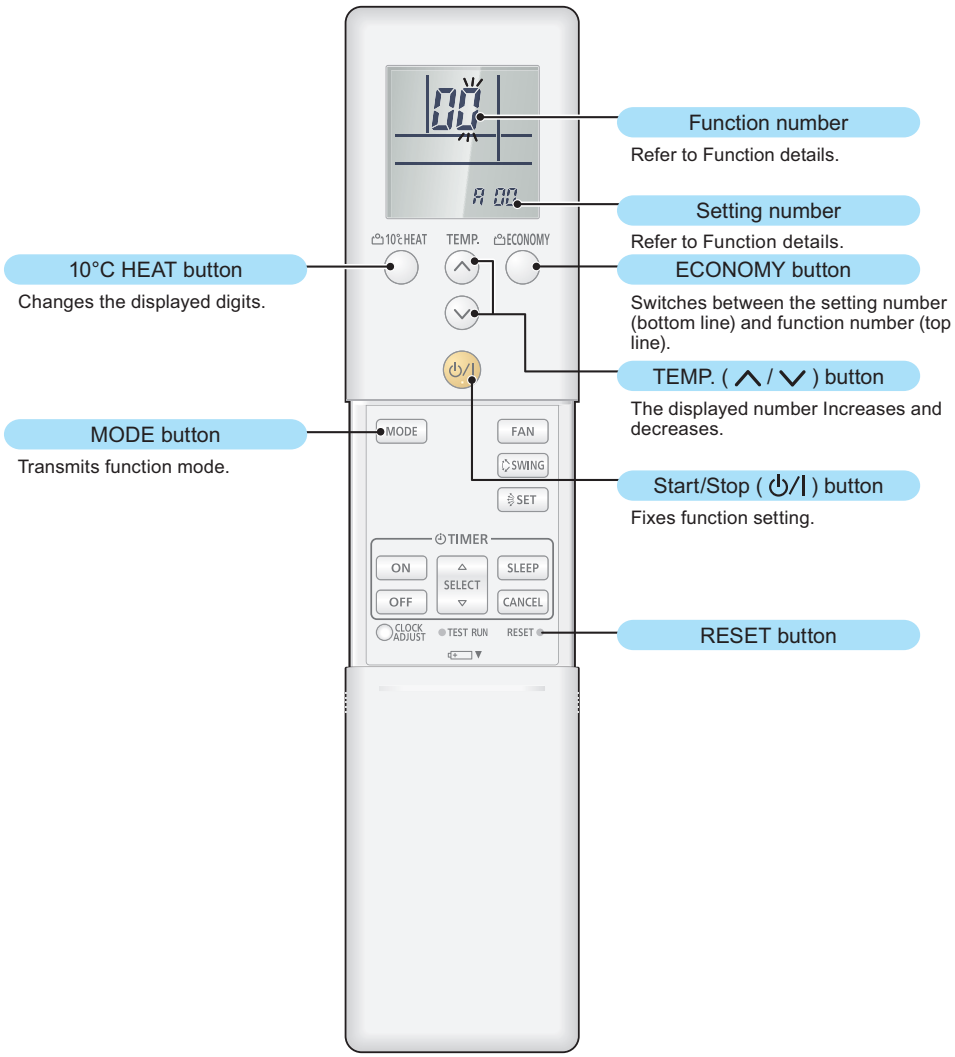

4-5 UNIT
MULTI-SPLIT TYPE

● Function setting procedure

1. Connect the power supply of the outdoor unit.
2. To enter the function setting mode, while holding down the ECONOMY and TEMP. ∧ buttons, press the RESET button.

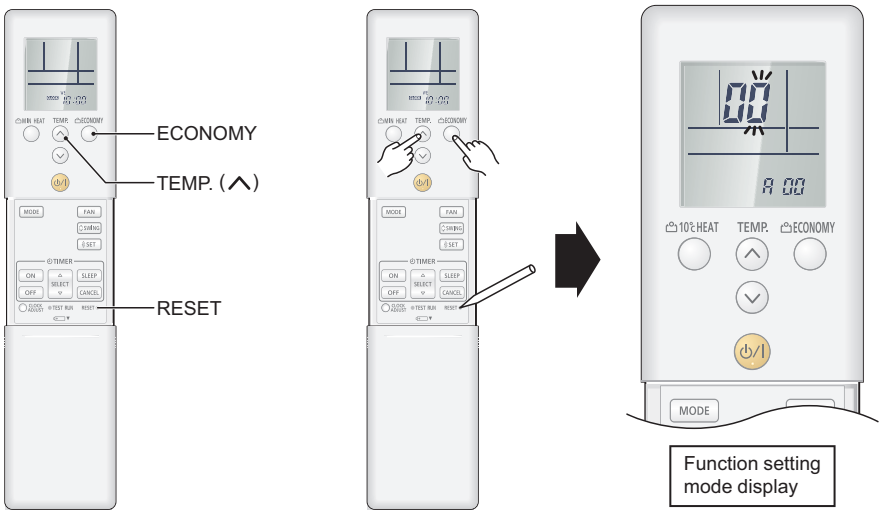

3. Select the function number by pressing the ∧ or the ∨ buttons. Each time the 10°C HEAT button is pressed, it switches between the right digit and the left digit.

4. Proceed to the setting number by pressing the ECONOMY button. (To return to the function number selection, press the ECONOMY button again.)

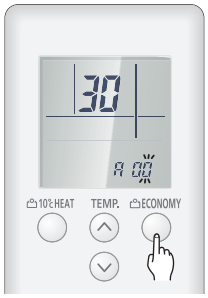

5. Select the function number by pressing the ∧ or the ∨ button. Each time the 10°C HEAT button is pressed, it switches between the right digit and the left digit.

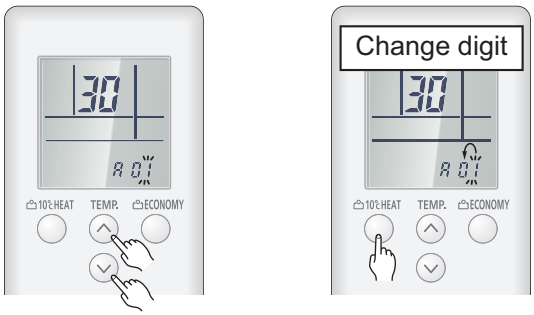

6. Press the MODE button once to transmit the function mode information.

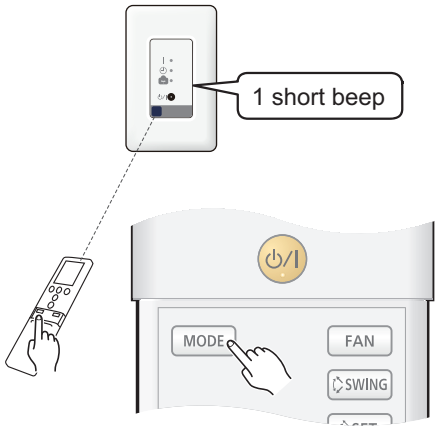

4-5 UNIT
MULTI-SPLIT TYPE

7. Press the ⏻/I button once to transmit the function setting information. 1 short beep will be emitted from the indoor unit or the IR receiver when the signal is received correctly. If wrong code is set, no beep sound will be emitted.

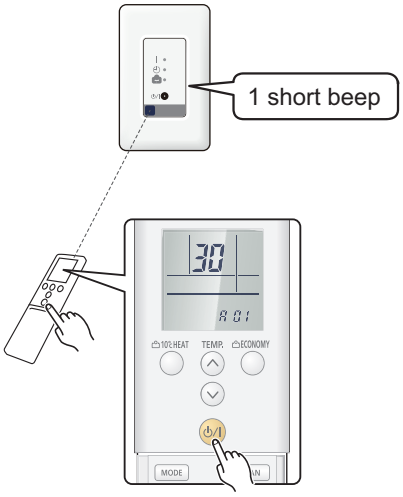

NOTE: Press ⏻/I button within 30 seconds after pressing MODE button.

For the function details, refer to Chapter 15-6. "Function details" on page 325.

8. Exit the function setting mode by pressing the RESET button.

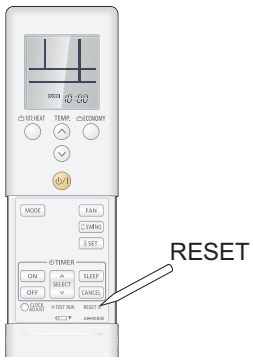

● Setting up each indoor unit

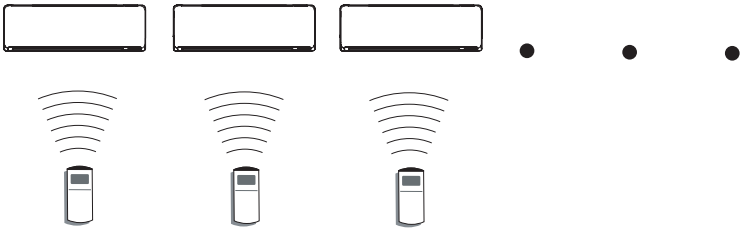

Repeat step from 1. to 8. to set up each indoor unit. If the custom code is other than "A", steps from 1. to 2. and 8. need to be performed.

● Resetting the power after setting up all indoor units

Important:

- If the reset is not performed, function cannot be read correctly.
- After all the functions have been set, the circuit breaker needs to be switched off for at least 2 minutes.
  - After the 2 minutes has passed, power can be restored.
  - The set function is stored in the PCB and will remain in memory even when the power of indoor unit is turned off.
    However setting function is effective after disconnecting the power supply and then reconnecting it.
- Record the latest configuration of the indoor unit function setting on a label, and put the label on the unit so it can be used for after-sales service operations.

Once the RESET button is pressed on the remote controller, the operation mode will be set to the AUTO MODE.

Adjust the operation mode to either cooling or heating before starting the operation of the air conditioner.

NOTE: If custom code other than "A" is set, the remote control must be set accordingly to the indoor unit setting.

4-5 UNIT
MULTI-SPLIT TYPE

● Remote controller custom code setting

Custom code setting of wireless remote controller needs to be same as the setting of the indoor unit. When you change the custom code setting of the wireless remote controller, do as follows:

1. Press the START/STOP button until only the clock is displayed on the display.

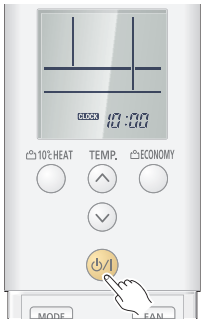

2. Press the MODE button for at least 5 seconds to display the current custom code (initially set to A).

3. Press the TEMP. “ ∧ “ or the “ ∨ ” button to change the custom code between A →b →c →d.

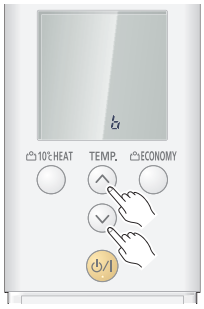

4. Press the MODE button again to return to the clock display. The custom code will be changed.

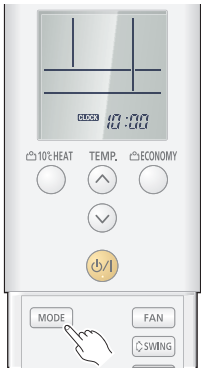

- If no buttons are pressed within 30 seconds after the custom code is displayed, the system returns to the original clock display. In this case, start again from step 1.
- The air conditioner custom code is set to A prior to shipment.
- If you do not know the air conditioner custom code setting, try each of the custom codes (A →b → c →d) until you find the code which operates the air conditioner.

4-5 UNIT MULTI-SPLIT TYPE

■ AR-RPF4E (for Wall mounted type KNCA)

The function number and the associated setting value are displayed on the LCD of the remote controller. Follow the instructions written in the local setup procedure supplied with the remote controller, and select appropriate setting according to the installation environment.

Before connecting the power supply of the indoor unit, reconfirm following items:

- Piping air tight test and vacuuming have been performed firmly.
- There is no wiring mistake.

Then, connect the power supply of the indoor unit.

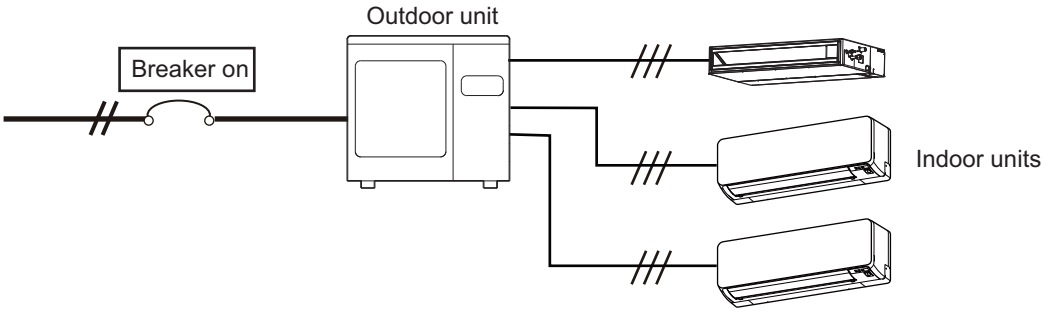

Entering function setting mode:

While pressing the FAN SPEED button and TEMP./SELECT (∧) button simultaneously, press the RESET button to enter the function setting mode.

STEP 1: Setting the remote controller custom code

Use the following steps to select the custom code of the remote controller. (Note that the air conditioner cannot receive a custom code if the air conditioner has not been set for the custom code.)

The custom codes that are set through this process are applicable only to the signal in the function setting.

For details on how to set the custom codes through the normal process, refer to "Custom code setting on AR-RPF4E" on page 304.

1. Press the TEMP./SELECT (∧) (∨) buttons to change the custom code between A →b →c →d. Match the code on the display to the air conditioner custom code. (Initially set to A.) If the custom code does not need to be selected, press the MODE button, and proceed to **STEP 2**.

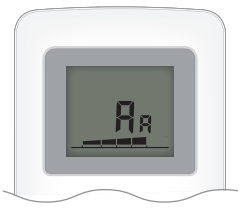

2. Press the MODE button to accept the custom code, and proceed to **STEP 2**.

NOTES:

- The air conditioner custom code is set to A prior to shipment.
- The remote controller resets to custom code A when the batteries on the remote controller are replaced. If you use a custom code other than code A, reset the custom code after replacing the batteries.
- If you do not know the air conditioner custom code setting, try each of the custom codes (A →b →c →d) until you find the code that operates the air conditioner.

4-5 UNIT
MULTI-SPLIT TYPE

STEP 2: Selecting the function number and setting value

1. Press the TEMP./SELECT (∧) (∨) buttons to select the function number. To switch between the left and right digits, press the MODE button.

2. Press the FAN SPEED button to proceed the setting value. To return the function number selection, press the FAN SPEED button again.

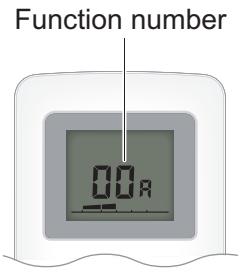

3. Press the TEMP./SELECT (∧) (∨) buttons to select the setting value. To switch between the left and right digits, press the MODE button.

4. Press the TIMER button, and when the indoor unit beeps, press the ⏻/I (START/STOP) button to confirm the settings.

5. Press the RESET button to cancel the function setting mode.

6. After completing the function setting, be sure to disconnect the power supply and then reconnect it.

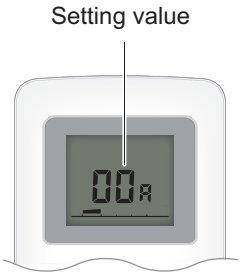

⚠ CAUTION

- After disconnecting the power supply, wait 30 seconds or more before reconnecting it. The function setting will not become active unless the power supply is disconnected and then reconnected.
- When using a custom code other than A, press RESET and then press and hold MODE again for 5 seconds or more to set the custom code.

4-5 UNIT
MULTI-SPLIT TYPE

● Custom code setting on AR-RPF4E

To interconnect the air conditioner and the wireless remote controller, assignment of the custom code for the wireless remote controller is required.

NOTE: Air conditioner cannot receive a signal if the air conditioner has not been set for the custom code.

When 2 or more air conditioners are installed in a room, and the remote controller is operating an air conditioner other than the one you wish to set, change the custom code of the remote controller to operate only the air conditioner you wish to set. (4 selections possible.)
Confirm the setting of the remote controller custom code and the function setting. If these do not match, the remote controller cannot be used to operate for the air conditioner.

1. Press the ⏻/I (START/STOP) button until the indicators on the remote controller turn off.
2. Press the MODE button for at least 5 seconds to display the current custom code. (Initially set to A.)
3. Press the TEMP./SELECT (∧) (∨) buttons to change the custom code between A →b →c →d. Match the code on the display to the air conditioner custom code. (Initially set to A.)
4. Press the MODE button again to return to the original display. The custom code will be changed.

To set custom code b, c, or d, perform same procedures for each code.

NOTES:

- If no button is pressed within 30 seconds after the custom code is displayed, the system returns to the original display. In this case, start again from step 1.
- The air conditioner custom code is set to A prior to shipment. To change the custom code, contact your retailer.
- If you do not know the assigned code for the air conditioner, try each of the custom code (A →b →c →d) until you find the code which operates the air conditioner.

4-5 UNIT
MULTI-SPLIT TYPE

15-4. Indoor unit (setting by wired remote controller)

- The function settings of the control of the indoor unit can be changed by this procedure according to the installation conditions. Incorrect settings can cause the indoor unit malfunction.
- After the power is turned on, perform the “Function setting” according to the installation conditions using the remote controller.
- The settings may be selected between the following two: Function number or Setting number.
- Settings will not be changed if invalid numbers or setting numbers are selected.
- This function cannot be used on the secondary units.

■ Preparation

Before connecting the power supply of the indoor unit, reconfirm following items:

- Piping air tightness test and vacuuming have been performed firmly.
- There is no wiring mistake. Then, connect the power supply of the indoor unit.

■ UTY-RNNYM

● Button name and function

During address setting mode, indoor unit reject the any operation command from remote controller.

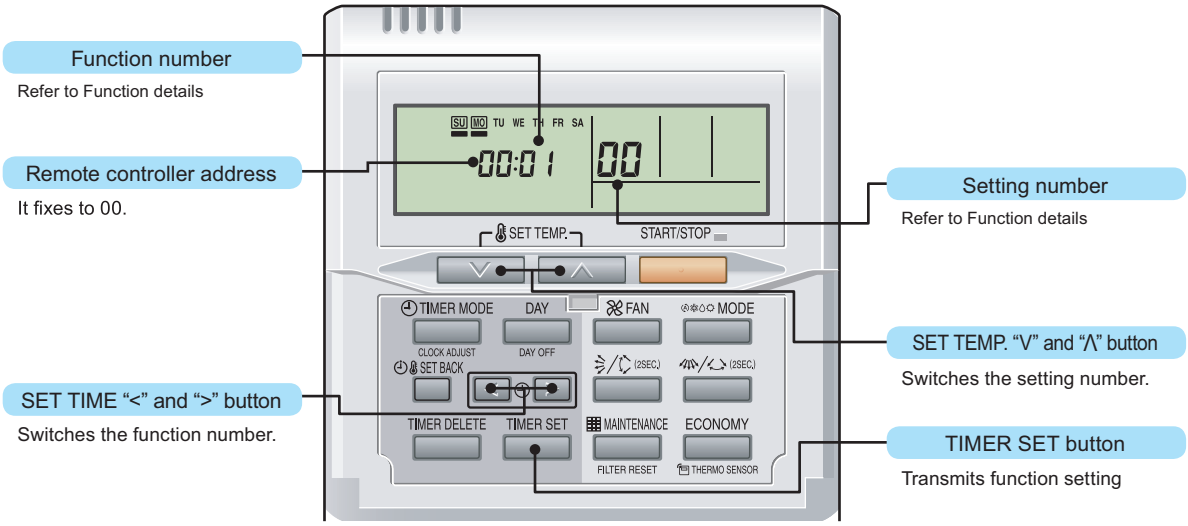

● Function setting procedure

1. Connect the power supply of the outdoor unit.
2. Switch to the function setting mode.
   To enter the function setting mode, hold down the 3 buttons of SET TEMP. ∨, SET TEMP. ∧, and FAN at the same time for 5 seconds or longer.

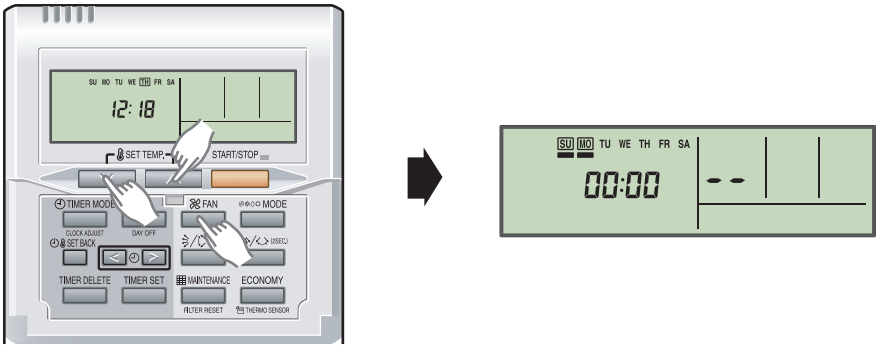

3. Select the function number by pressing the SET TIME < or the SET TIME > button.

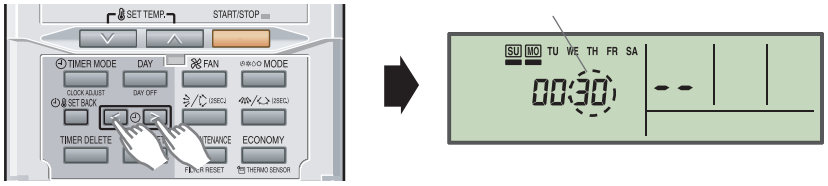

4. Select the setting number by pressing the SET TEMP. ∧ or the SET TEMP. ∨ button.
   The display flashes during setting number selection.

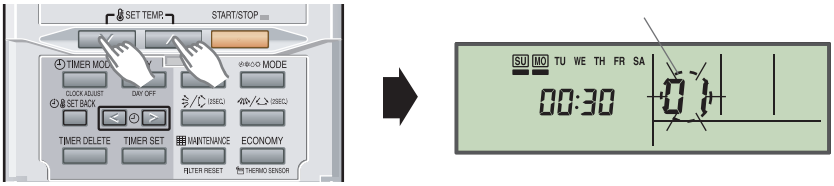

5. Confirm the setting by pressing the TIMER SET button.
The data will be transferred to the indoor unit.

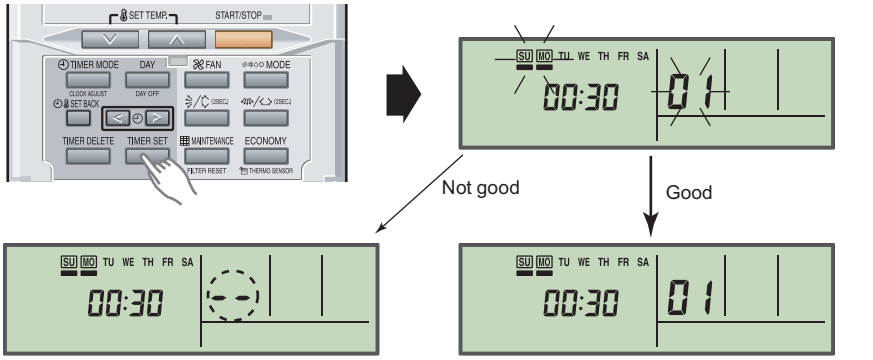

- Data is not set up on the indoor unit correctly (-- is displayed.)
- Set up the data again according to the procedure in step 5, 6 above.

Data is correctly set up on the indoor unit (Flashing display changes to illuminated display.)

Function details: Refer to Chapter 15-6. "Function details" on page 325.

6. Exit the function setting mode by holding 3 buttons of SET TEMP. ∨, SET TEMP. ∧ and FAN at the same time.

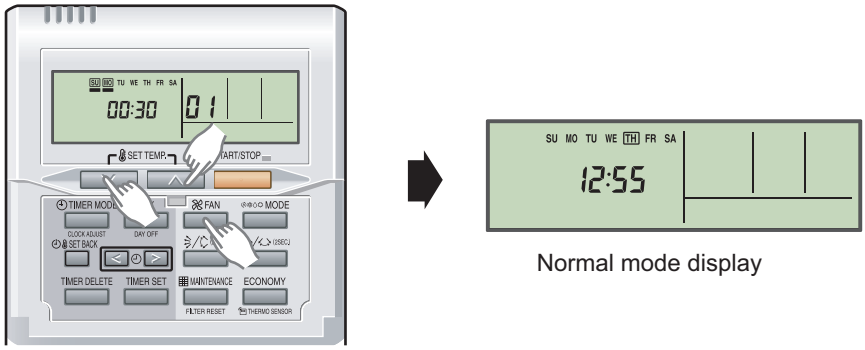

Normal mode display

If no button is pressed within 60 seconds after buttons mentioned above are pressed, it will automatically exit the function setting mode.
If you exit the function setting mode unintentionally during setting, enter the mode again according to the procedure in step 2.

● Setting up each indoor unit

Repeat the procedures from step 1 to 6, and set up the indoor units requiring function setting.

● Resetting the power after setting up function of all indoor units

NOTES:

- If the reset is not performed, function cannot be read correctly.
- After all the functions have been set, the circuit breaker needs to be switched off for at least 2 minutes.
  - After the 2 minutes has passed, power can be restored.
  - The set function is stored in the PCB and will remain in memory even when the power of indoor unit is turned off.
    However setting function is effective after disconnecting the power supply and then reconnecting it.
- Record the latest configuration of the indoor unit function setting on a label, and put the label on the unit so it can be used for after-sales service operations.

4-5 UNIT
MULTI-SPLIT TYPE

■ UTY-RLRY

● Setting procedure by using wired remote controller

The function number and the associated setting value are displayed on the LCD of the remote controller. Follow the instructions written in the local setup procedure supplied with the remote controller, and select appropriate setting according to the installation environment.

Before connecting the power supply of the indoor unit, reconfirm following items:

- Piping air tightness test and vacuuming have been performed firmly.
- There is no wiring mistake.

1. Connect the power supply.
2. To activate the address setting mode, hold down the three buttons of “MENU”, “<“, and “ENTER” at the same time for 2 seconds or longer. Menu 2 setting screen is displayed.

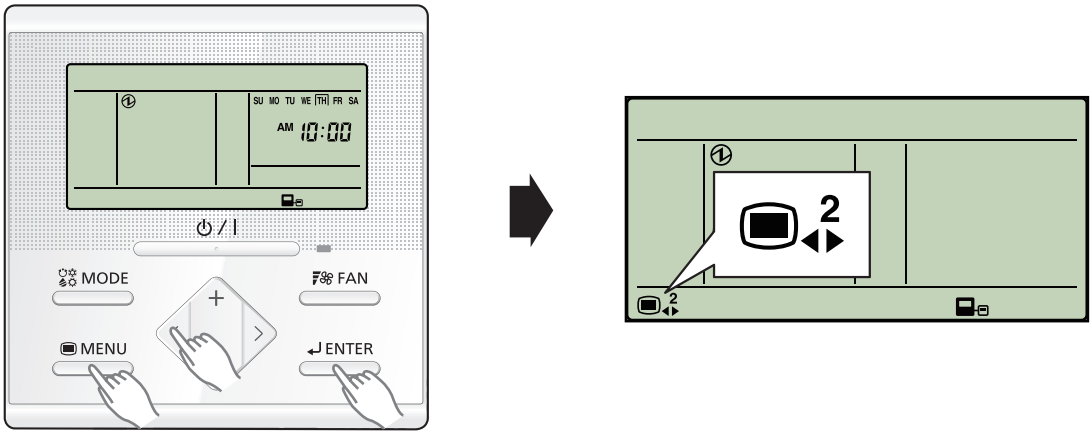

3. Select the “13” in Menu 2 settings. Then press the “ENTER” button.

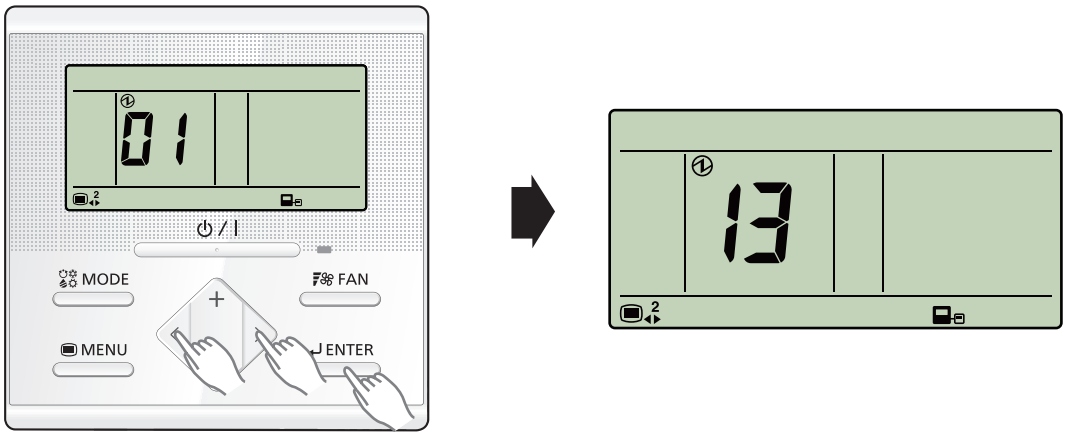

4. Pressing the "+" or "-" button, select a remote controller address (select the indoor unit you want to operate). Then press the "ENTER" button.

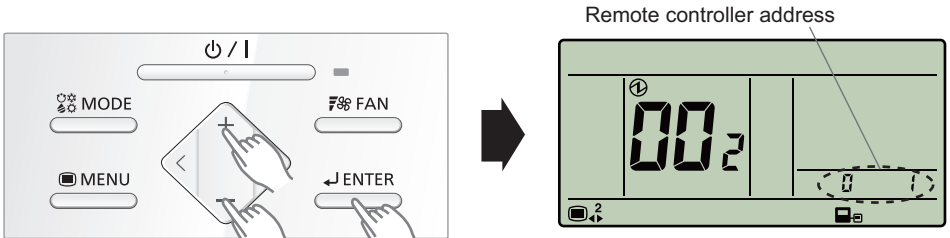

Example: When remote controller address “01” is selected.

5. Pressing the "+" or "-" button, to select the function number. Then press the "ENTER" button.

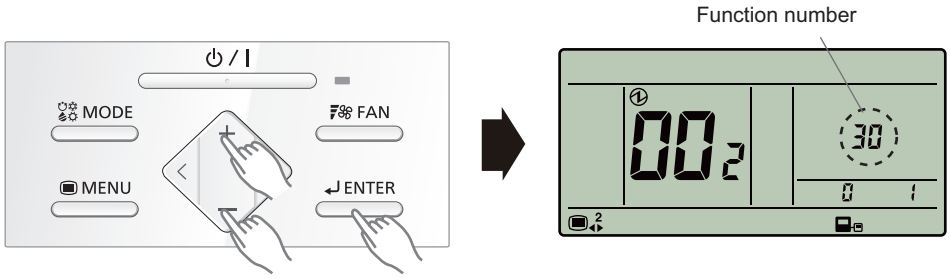

6. Pressing the "+" or "-" button, to select the setting number. Then press the "ENTER" button.

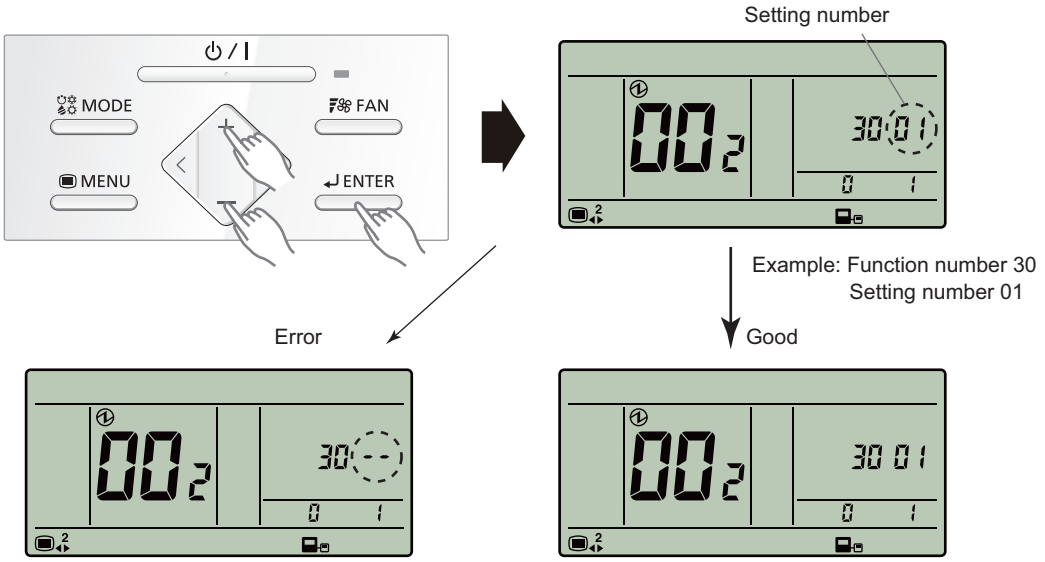

- When the data was not set up on the indoor unit (" --" is displayed.)
- Set up the data again.

- When the data was normally set up on the indoor unit.

Pressing the "ENTER" button to return to the address selection screen.

If setting has been completed, pressing the "MENU" button to return to the Menu 2 item selection screen.

● Setting up each indoor unit

Repeat the procedure from step 1 to 6, and set up the indoor units requiring function setting.

● Resetting the power after setting up function of all indoor units

NOTES:

- If the reset is not performed, function cannot be read correctly.
- After all the functions have been set, the circuit breaker needs to be switched off for at least 2 minutes.
  - After the 2 minutes has passed, power can be restored.
  - The set function is stored in the PCB and will remain in memory even when the power of indoor unit is turned off.
    However setting function is effective after disconnecting the power supply and then reconnecting it.
- Record the latest configuration of the indoor unit function setting on a label, and put the label on the unit so it can be used for after-sales service operations.

■ UTY-RVNYM

● Function setting procedure

1. Connect the power supply of the outdoor unit.
2. Switch to the function setting mode.
   When [Menu button] is pressed twice while “Monitor” screen is displayed, it switches to the “Submenu” screen. If [Menu button] is pressed while the “Submenu” screen is displayed, the display returns to the “Monitor” screen.

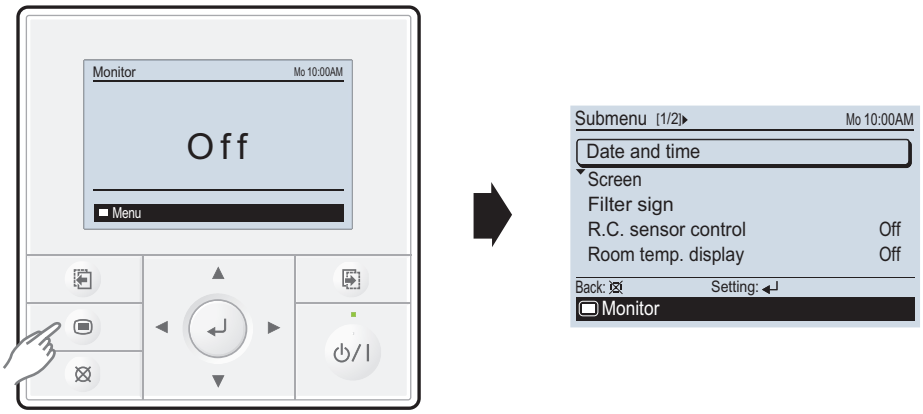

Press the [Screen switch button (Left)] and [Screen switch button (Right)] simultaneously for 5 seconds to switch to “Service” screen.

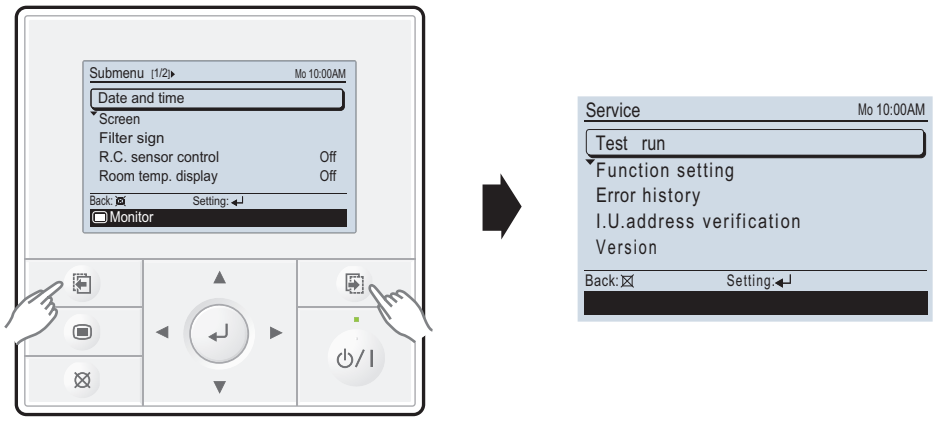

Select [Function setting] with pressing the [Cursor button (Up/Down)], and press the [Enter button].

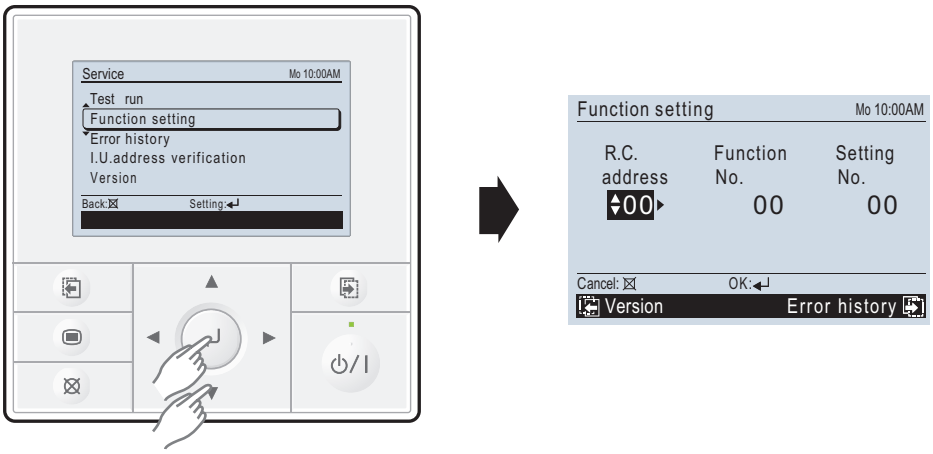

3. Select the [Function No.] with pressing the [Cursor button (Left/Right)], and select the Function No. to be set with pressing the [Cursor button (Up/Down)].

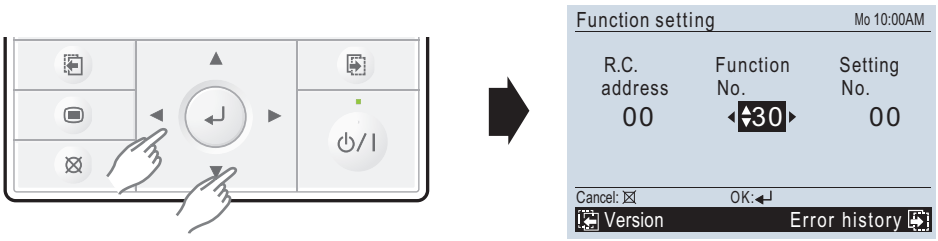

4. Select the [Setting No.] with pressing the [Cursor button (Left/Right)], and select the Setting No. to be set with pressing the [Cursor button (Up/Down)].

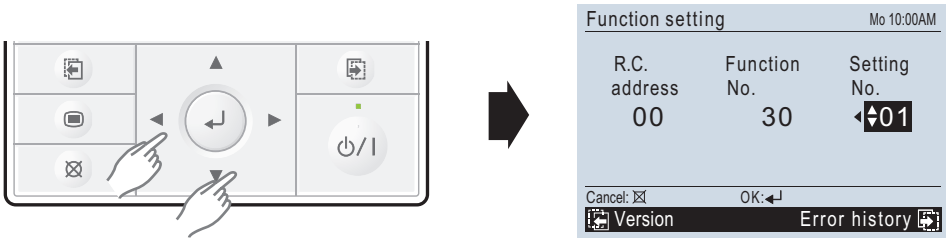

5. Pressing the [Enter button], confirm the setting.
The data will be transferred to the indoor unit.

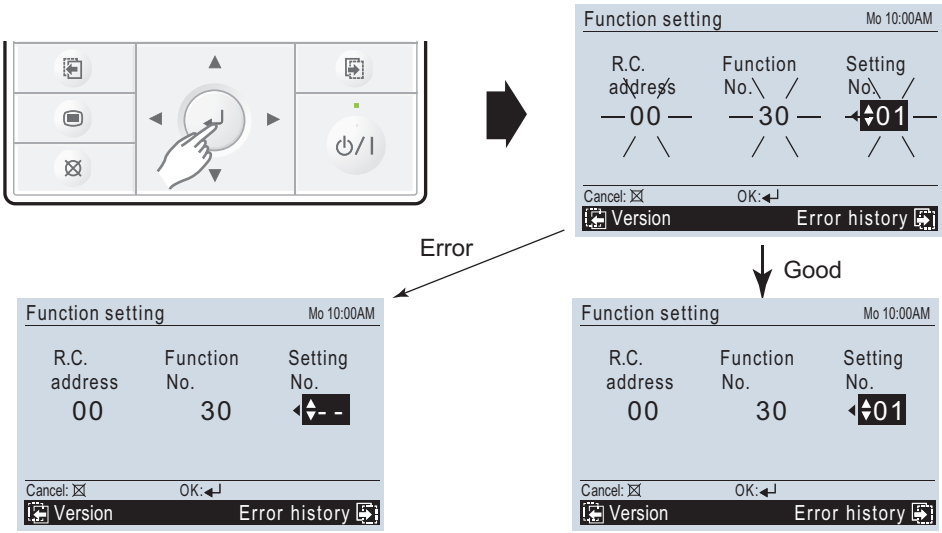

Function details: Refer to Chapter 15-6. "Function details" on page 325.

6. When [Cancel button] is pressed twice while “Function setting” screen is displayed, it switches to the “Submenu” screen.

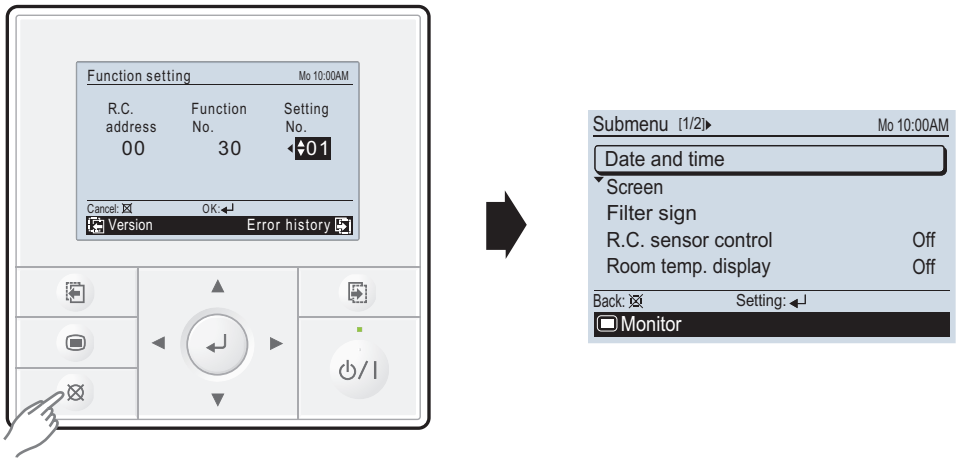

If no button is pressed within 60 seconds after buttons mentioned above are pressed, it will automatically exit the function setting mode.

If you exit the function setting mode unintentionally during setting, enter the mode again according to the procedure in step 2.

● Setting up each indoor unit

Repeat the procedures from step 1 to 6, and set up the indoor units requiring function setting.

● Resetting the power after setting up function of all indoor units

NOTES:

- If the reset is not performed, function cannot be read correctly.
- After all the functions have been set, the circuit breaker needs to be switched off for at least 2 minutes.
  - After the 2 minutes has passed, power can be restored.
  - The set function is stored in the PCB and will remain in memory even when the power of indoor unit is turned off.
    However setting function is effective after disconnecting the power supply and then reconnecting it.
- Record the latest configuration of the indoor unit function setting on a label, and put the label on the unit so it can be used for after-sales service operations.

■ UTY-RNRYZ*

● Setting procedure by using wired remote controller

The function number and the associated setting value are displayed on the LCD of the remote controller. Follow the instructions written in the local setup procedure supplied with the remote controller, and select appropriate setting according to the installation environment.

Before connecting the power supply of the indoor unit, reconfirm following items:

- Piping air tightness test and vacuuming have been performed firmly.
- There is no wiring mistake.

1. Connect the power supply.
2. When the “Function Setting” on the “Maintenance” screen is touched, the “Installer Password Verification” screen is displayed. After enter the installer password, and touch the “OK”, “Function Setting” screen is displayed.

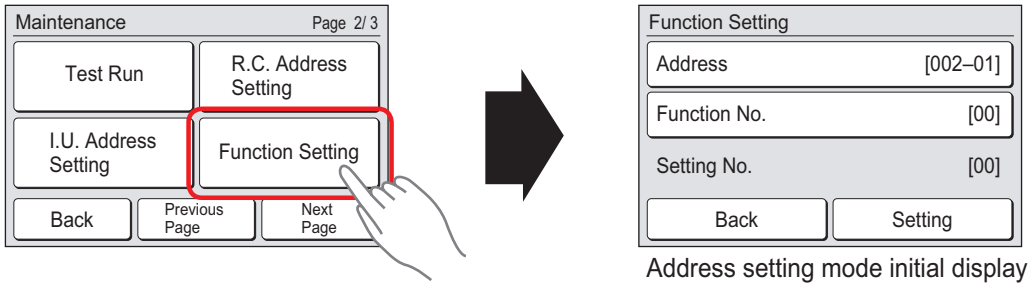

Address setting mode initial display

3. Touch the “Address” on the “Function Setting” screen.

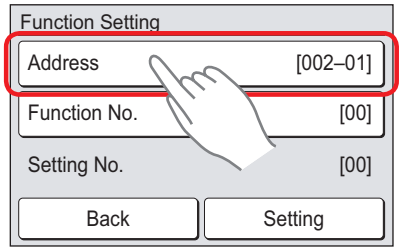

4. “Address” screen is displayed. Select the address of the indoor unit whose function number is be set by touching ▲ or ▼. When setting at all the indoor units, touch “All”.

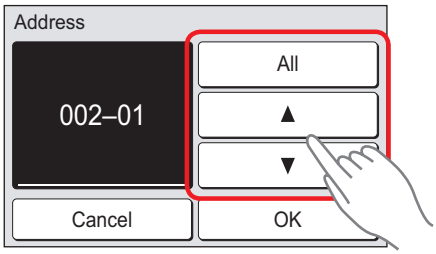

When the “OK” is touched, the display returns to the “Function Setting” screen.

5. Touch the “Function No.” on the “Function Setting” screen.

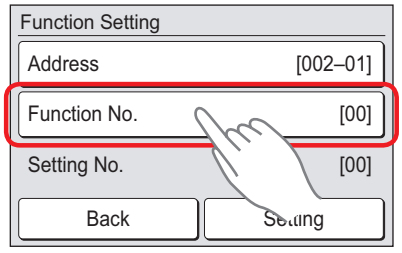

6. “Function No.” screen is displayed. Set the “Function No.” with ▲ or ▼.

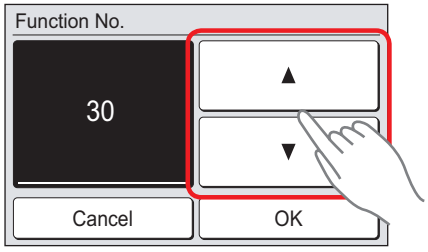

When the “OK” is touched, the display returns to the “Function Setting” screen.

7. Touch the “Function No.” on the “Function Setting” screen.

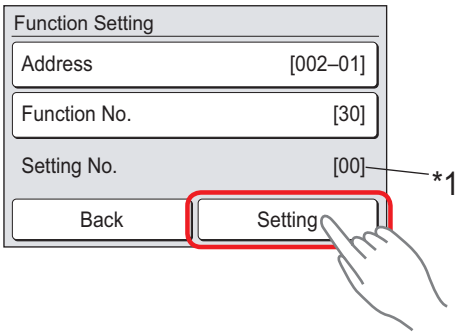

NOTE: *1: When “All” is chosen by “5”, and different set up “Setting No.” from two or more indoor units, “-” is displayed on “Setting No.”.

8. Setting screen of “Setting No.” is displayed. Set the “Function No.” with ▲ or ▼.

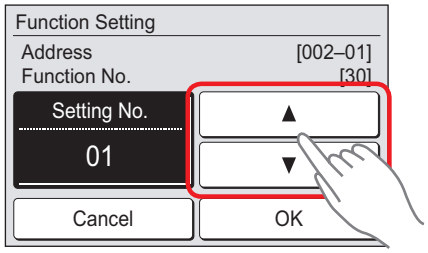

Example: Function number: 30, Setting Number: 01
When the “OK” is touched, the “Function Setting” verification screen is displayed.

9. Touch the “Yes” of the verification screen.

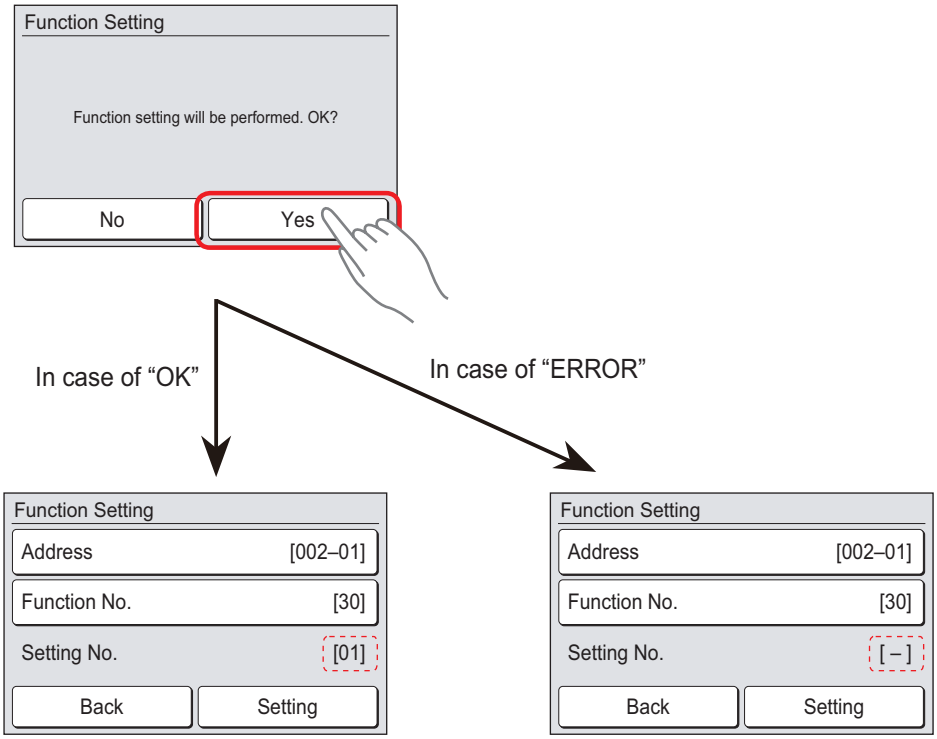

When the data was normally set up on the indoor unit

When the data was not set up on the indoor unit ([-] is displayed.), set up the data again according to the procedure in step 4 to 7 above

10. When the “Back” on the “Function Setting” screen is touched, the display returns to the “Maintenance” screen.

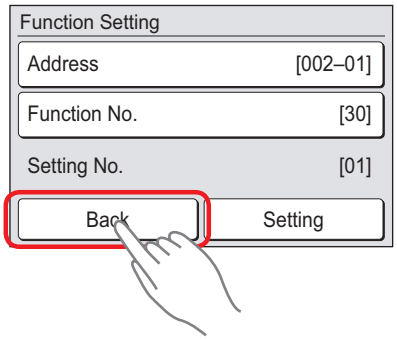

● Setting up each indoor unit

Repeat the procedure from step 1 to 6, and set up the indoor units requiring function setting.

● Resetting the power after setting up function of all indoor units

NOTES:

- If the reset is not performed, function cannot be read correctly.
- After all the functions have been set, the circuit breaker needs to be switched off for at least 2 minutes.
  - After the 2 minutes has passed, power can be restored.
  - The set function is stored in the PCB and will remain in memory even when the power of indoor unit is turned off.
    However setting function is effective after disconnecting the power supply and then reconnecting it.
- Record the latest configuration of the indoor unit function setting on a label, and put the label on the unit so it can be used for after-sales service operations.

■ UTY-RVRY

● Function setting procedure

1. Tap the menu as shown below.

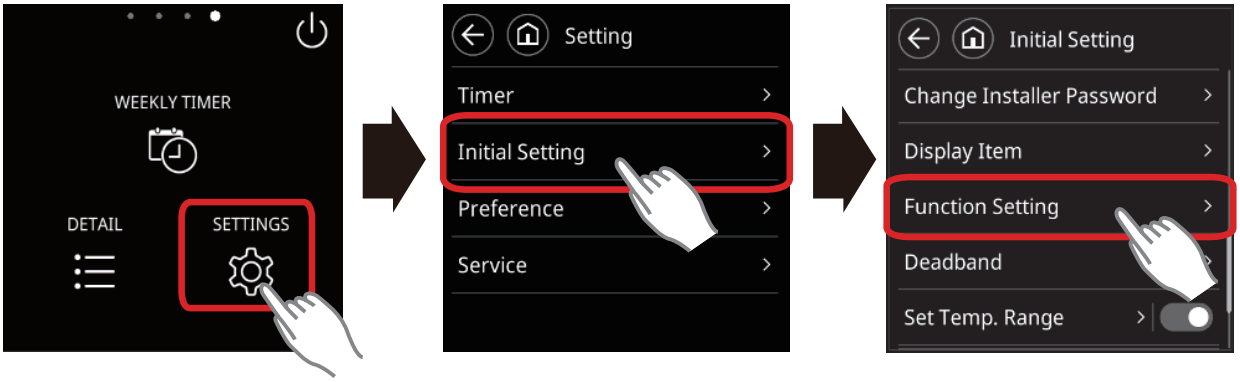

Enter the Admin password. Enter the Installer password.

2. Tap “Address” on the Function Setting screen.

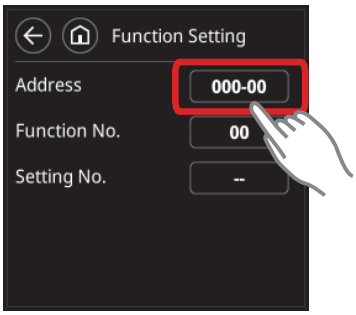

3. Pull-down window of indoor unit address is displayed. Select the address of the indoor unit whose function number is to be set.

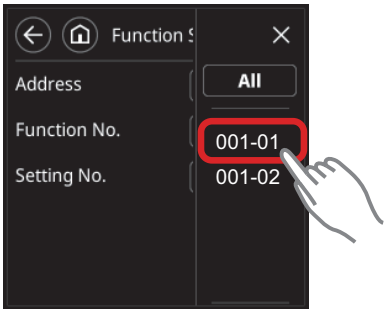

4. Tap “Function No.” on the Function Setting screen.

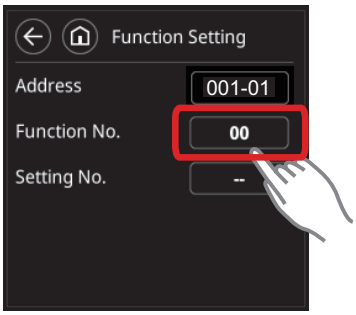

4-5 UNIT
MULTI-SPLIT TYPE

5. Pull-down window of Function No. is displayed. Set the Function No to be set.

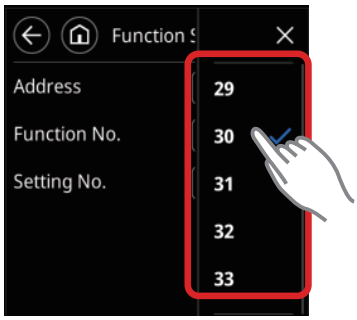

6. Tap “Setting No.” on the Function Setting screen.

7. Pull-down window of “Setting No.” is displayed. Set the Setting No.

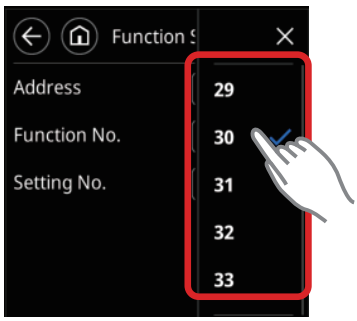

8. Tap “Set” on the verification screen.

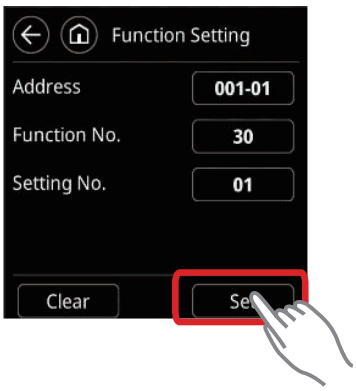

Tap  to return to the Initial Setting screen.

4-5 UNIT
MULTI-SPLIT TYPE

15-5. Indoor unit (setting by simple remote controller)

- The function settings of the control of the indoor unit can be changed by this procedure according to the installation conditions. Incorrect settings can cause the indoor unit malfunction.
- After the power is turned on, perform the “Function setting” according to the installation conditions using the remote controller.
- The settings may be selected between the following two: Function number or Setting number.
- Settings will not be changed if invalid numbers or setting numbers are selected.
- This function cannot be used on the secondary units.

■ Preparation

Before connecting the power supply of the indoor unit, reconfirm following items:

- Piping air tightness test and vacuuming have been performed firmly.
- There is no wiring mistake. Then, connect the power supply of the indoor unit.

■ UTY-RSNYM

● Button name and function

During address setting mode, indoor unit reject the any operation command from remote controller.

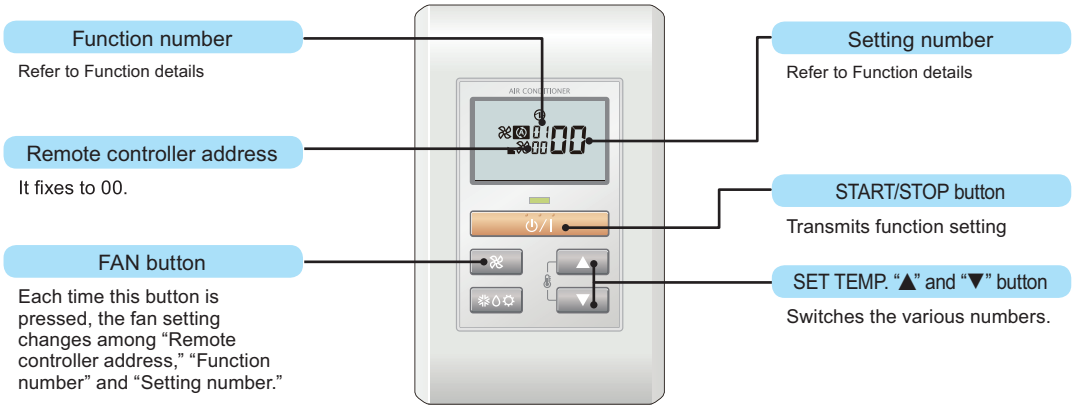

● Function setting procedure

1. Connect the power supply of the outdoor unit.
2. Switch to the function setting mode.
   To enter the function setting mode, hold down the 3 buttons of SET TEMP. ▲, SET TEMP. ▼ and FAN at the same time for 5 seconds or longer.

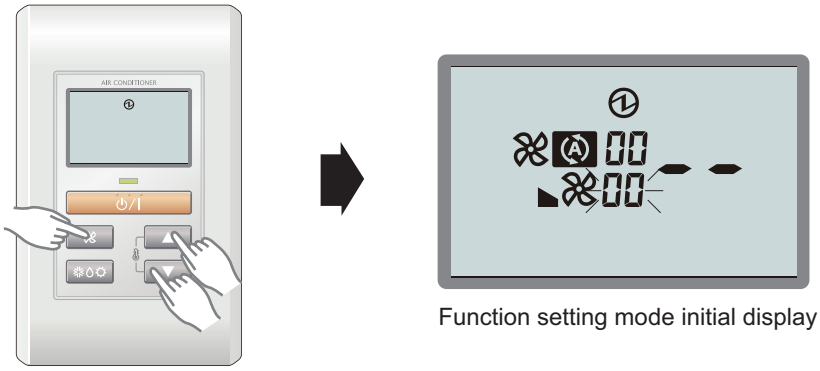

Function setting mode initial display

3. Press the FAN button.
   The Function number indicator flashes. Then, press either the SET TEMP. ▲ button or the SET TEMP. ▼ button to set up the function number.

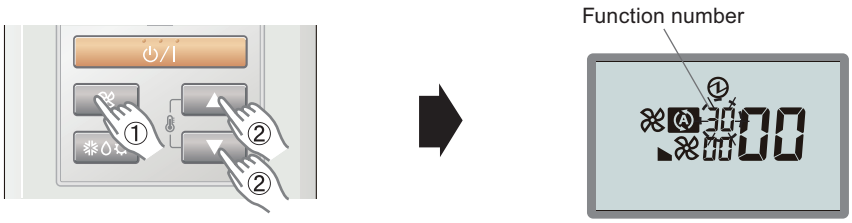

4. Select the setting number by pressing the SET TEMP. ▲ or SET TEMP. ▼ button.
The setting number indicator flashes during setting number selection.

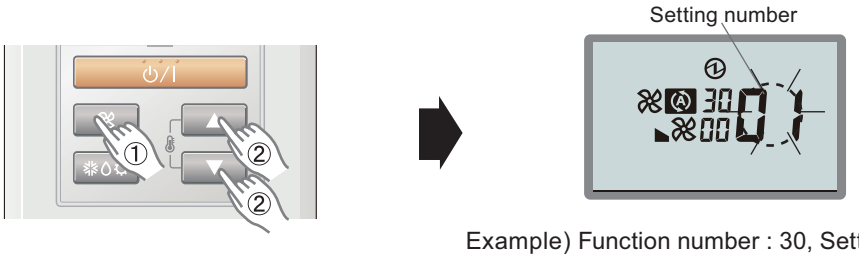

Example) Function number : 30, Setting number : 01

5. Confirm the setting by pressing the TIMER SET button.
The data will be transferred to the indoor unit.

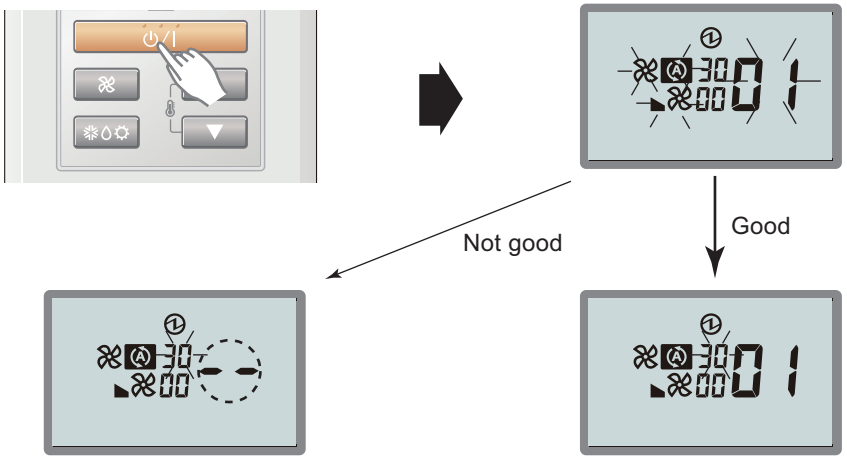

- Data is not set up on the indoor unit correctly (-- is displayed.)
- Set up the data again according to the procedure in step 3, 4 above.

Data is correctly set up on the indoor unit.

Function details: Refer to Chapter 15-6. "Function details" on page 325.

6. Exit the function setting mode by pressing the 3 buttons of SET TEMP. ▲, SET TEMP. ▼, and FAN at the same time for 5 seconds or longer.
After exiting the function setting mode, the display returns to the normal mode.

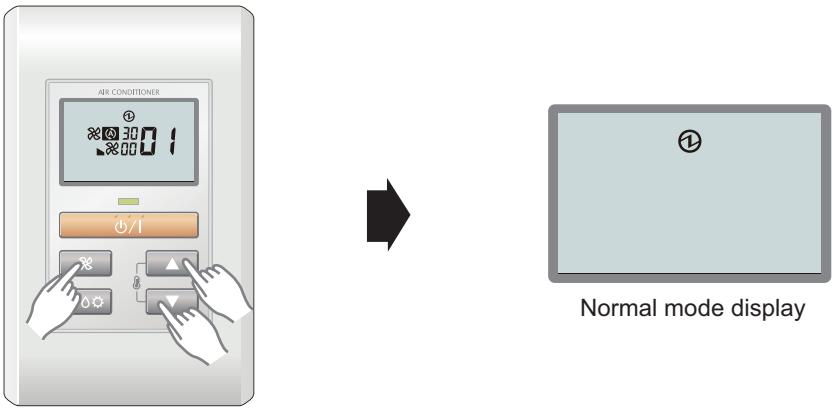

Normal mode display

If no button is pressed within 60 seconds after buttons mentioned above are pressed, it will automatically exit the function setting mode.

If you exit the function setting mode unintentionally during setting, enter the mode again according to the procedure in step 2.

● Setting up each indoor unit

Repeat the procedures from step 1 to 6, and set up the indoor units requiring function setting.

4-5 UNIT
MULTI-SPLIT TYPE

● Resetting the power after setting up function of all indoor units

NOTES:

- If the reset is not performed, function cannot be read correctly.
- After all the functions have been set, the circuit breaker needs to be switched off for at least 2 minutes.
  - After the 2 minutes has passed, power can be restored.
  - The set function is stored in the PCB and will remain in memory even when the power of indoor unit is turned off.
    However setting function is effective after disconnecting the power supply and then reconnecting it.
- Record the latest configuration of the indoor unit function setting on a label, and put the label on the unit so it can be used for after-sales service operations.

4-5 UNIT
MULTI-SPLIT TYPE

■ UTY-RSRY/UTY-RHRY

● Setting procedure by using wired remote controller

The function number and the associated setting value are displayed on the LCD of the remote controller. Follow the instructions written in the local setup procedure supplied with the remote controller, and select appropriate setting according to the installation environment.

Before connecting the power supply of the indoor unit, reconfirm following items:

- Piping air tightness test and vacuuming have been performed firmly.
- There is no wiring mistake.

NOTE: Set only one Master remote controller.

1. Connect the power supply.
2. With “Monitor mode” screen displayed, press and hold the SET TEMP. ∧ button and FAN ∨ button simultaneously for at least 2 seconds.

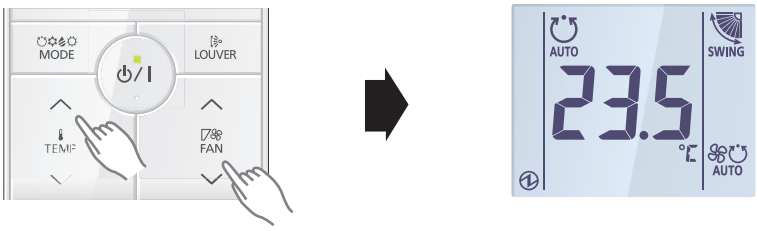

3. The Menu 1 screen is displayed. Press and hold the SET TEMP. ∧ button at least 2 seconds. Setting mode selection screen is displayed.

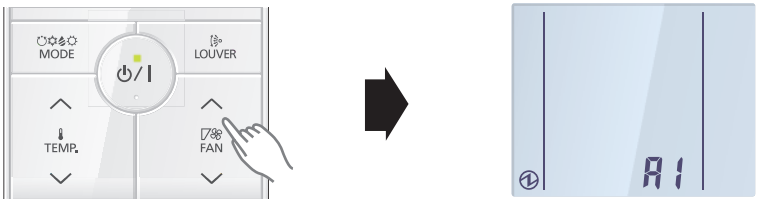

4. Press the SET TEMP. ∧ or SET TEMP. ∨ button to select F1 (Menu 2-F1) setting mode or F2 (Menu 2-F2) setting mode.

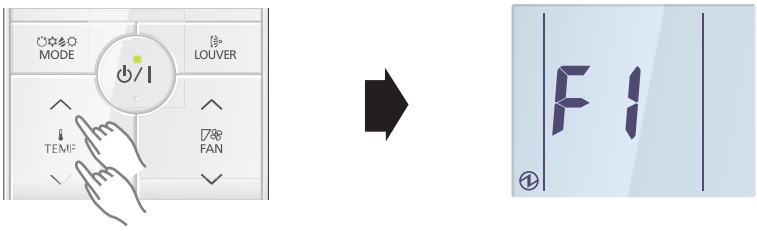

F1: Initial settings mode

F2: Maintenance settings mode

5. Press the ⏻/I button. Setting item selection screen is displayed. (Item No. is displayed.)

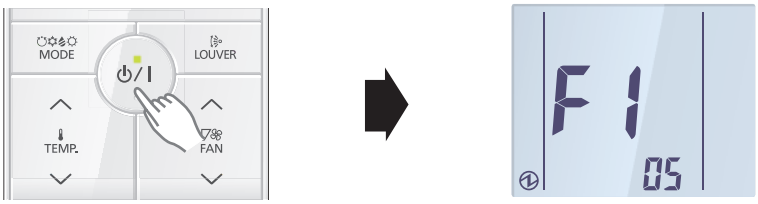

6. Select the item number to be set with the SET TEMP. ∧ or SET TEMP. ∨ button, and press the ⏻/I button to switch to the setting screen.

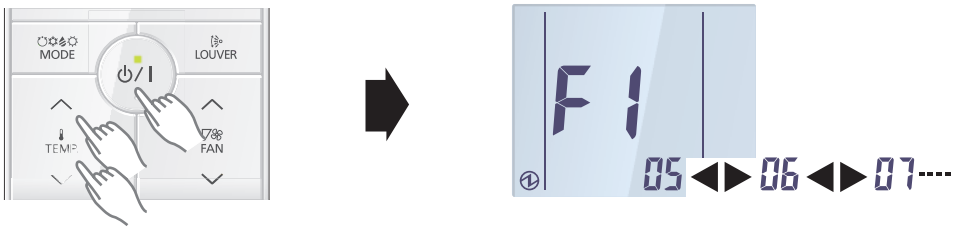

7. Select the “13” in Menu 2-F1 settings. Then, press the ⏻/I button.

8. Select the 2-wire remote controller address with the SET TEMP. ∧ or SET TEMP. ∨ button. Then press the ⏻/I button.

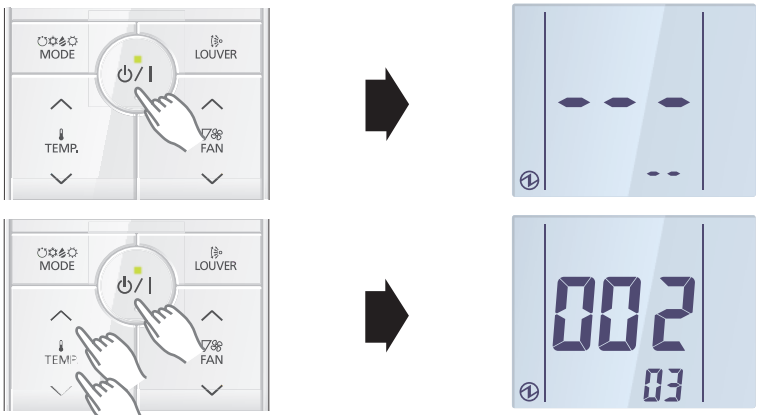

Select the 2-wire remote controller address (Ex. Select the 002-03)

9. Set the function number with the SET TEMP. ∧ or SET TEMP. ∨ button. Then press the ⏻/I button.

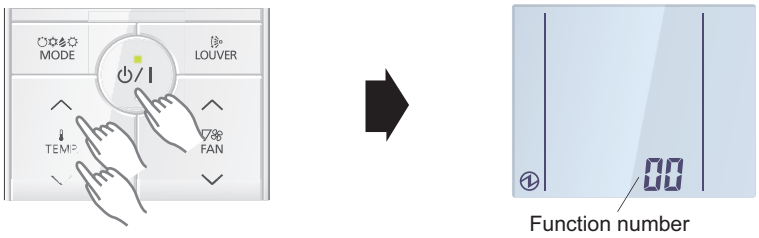

10. Set the setting number with the SET TEMP. ∧ or SET TEMP. ∨ button. Then press the ⏻/I button.

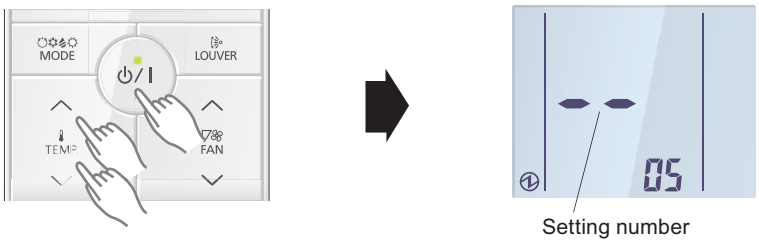

11. Setting results are displayed after data transmission.

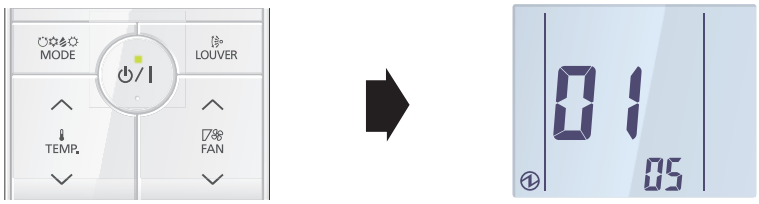

12. Press the ⏻/I button to return to the 2-wire remote controller address selection screen of step 9. If setting has been completed, press the FAN ∨ button to return to the Menu 2-F1 item selection screen.

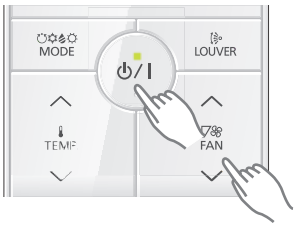

● Setting up each indoor unit

Repeat the procedure from step 1 to 6, and set up the indoor units requiring function setting.

● Resetting the power after setting up function of all indoor units

NOTES:

- If the reset is not performed, function cannot be read correctly.
- After all the functions have been set, the circuit breaker needs to be switched off for at least 2 minutes.
  - After the 2 minutes has passed, power can be restored.
  - The set function is stored in the PCB and will remain in memory even when the power of indoor unit is turned off.
    However setting function is effective after disconnecting the power supply and then reconnecting it.
- Record the latest configuration of the indoor unit function setting on a label, and put the label on the unit so it can be used for after-sales service operations.

15-6. Function details

■ Contents of function setting

Each function setting listed in this section is adjustable in accordance with the installation environment.

NOTE: Setting will not be changed if invalid numbers or setting values are selected.

● Function setting list

	Function no.	Functions	Compact cassette	Mini duct	Slim duct	Medium static pressure duct		Ceiling	Floor
						KMLB	KMTAP		
1)	11	Filter sign	●	●	●	●	●	●	●
2)	20	Ceiling height	●	—	—	—	—	●	—
3)	21	Static pressure	—	—	—	●	—	—	—
4)	22	Outlet directions	●	—	—	—	—	—	—
5)	26	Static pressure	—	●	●	—	●	—	—
6)	28	Horizontal louver direction switching for dew condensation prevention	—	—	—	—	—	●	—
7)	30/31	Room temperature control for indoor unit sensor	●	●	●	●	●	●	●
8)	35/36	Room temperature control for wired remote controller sensor	●	●	●	●	●	●	—
9)	40	Auto restart	●	●	●	●	●	●	●
10)	42	Room temperature sensor switching	●	●	●	●	●	●	●
11)	44	Remote controller custom code	●	●	●	●	●	●	●
12)	46	External input control	●	●	●	●	●	●	●
13)	48	Room temperature sensor switching (Aux.)	●	●	●	●	●	●	—
14)	49	Indoor unit fan control for energy saving for cooling	●	●	●	●	●	●	—
15)	60	Switching functions for external output terminal	●	●	●	●	●	●	●
16)	68	Auto mode type	—	—	—	—	●	—	—
17)	69	Deadband value	—	—	—	—	●	—	—

	Function no.	Functions	Wall mounted				
			KMCG (-B)	KETF (-B)	KGTG	KNCA	KMTE
1)	11	Filter sign	●	●	●	●	●
2)	20	Ceiling height	—	—	—	—	—
3)	21	Static pressure	—	—	—	—	—
4)	22	Outlet directions	—	—	—	—	—
5)	26	Static pressure	—	—	—	—	—
6)	28	Horizontal louver direction switching for dew condensation prevention	—	—	—	—	—
7)	30/31	Room temperature control for indoor unit sensor	●	●	●	●	●
8)	35/36	Room temperature control for wired remote controller sensor	●	●	●	—	●
9)	40	Auto restart	●	●	●	●	●
10)	42	Room temperature sensor switching	●	●	●	—	●
11)	44	Remote controller custom code	●	●	●	●	●
12)	46	External input control	●	●	●	—	●
13)	48	Room temperature sensor switching (Aux.)	●	●	●	—	●
14)	49	Indoor unit fan control for energy saving for cooling	●	●	●	●	●
15)	60	Switching functions for external output terminal	●	●	●	—	●

1) Filter sign

Select appropriate intervals for displaying the filter sign on the indoor unit according to the estimated amount of dust in the air of the room.

If the indication is not required, select "No indication" (03).

Function number	Setting value	Setting description	Factory setting
11	00	Standard	
	01	Long interval	
	02	Short interval	
	03	No indication	♦

Setting description	Compact cassette	Medium static pressure duct	Mini duct	Slim duct	Wall mounted
Standard	2,500 hours		400 hours		
Long interval	4,400 hours		1,000 hours		
Short interval	1,250 hours		200 hours		

4-5 UNIT MULTI-SPLIT TYPE

2) Ceiling height (for Compact cassette type and Ceiling type only)

Select the appropriate ceiling height according to the place of installation.

Function number	Setting value	Setting description	Factory setting
20	00	Standard	♦
	01	High ceiling	

For the specific height for each setting value, refer to “Installation space” in Chapter 4. "Dimensions" on page 33.

NOTE: The ceiling height values are for the 4-way outlet. Do not change this setting in the 3-way outlet mode.
7,000 or 9,000 Btu/h models cannot be installed in high ceilings.Do not change this setting.

3) Static pressure (for Medium static pressure duct type (ARXG22KMLB) only)

Select the appropriate static pressure according to the installation conditions.

Function number	Setting value	Setting description	Factory setting
21	00	Normal	♦
	01	High static pressure 1	
	02	High static pressure 2	
	03	High static pressure 3	

4) Outlet directions (for Compact cassette type only)

Select the appropriate number of outlet directions according to the installation conditions.

Function number	Setting value	Setting description	Factory setting
22	00	4-way	♦
	01	3-way	

4-5 UNIT MULTI-SPLIT TYPE

5) Static pressure (for Mini duct type, Slim duct type, and Medium static pressure duct type [ARXH12–22KMTAP])

Select the appropriate static pressure according to the installation conditions.

For mini duct type:

Function number	Setting value	Setting description	Factory setting
26	00	0 Pa	
	01	10 Pa	
	02	20 Pa	
	03	30 Pa	
	04	40 Pa	
	05	50 Pa	
	31	Standard (10 Pa: 07; 09; 12 models, 15 Pa: 14; 18 models)	♦

NOTES:

- Range of static pressure is different by model. 07, 09, 12 models are 0 to 30 Pa. 14, 18 models are 0 to 50 Pa.
- Setting number in 07, 09, 12 models is “04 to 30”: Operation is same as that “03”.
- Setting number in 14, 18 models is “06 to 30”: Operation is same as that “05”.
- Setting number value cannot be set to 32 or more.

For slim duct type:

Function number	Setting value	Setting description	Factory setting
26	00	0 Pa	
	01	10 Pa	
	02	20 Pa	
	03	30 Pa	
	04	40 Pa	
	05	50 Pa	
	06	60 Pa	
	07	70 Pa	
	08	80 Pa	
	09	90 Pa	
	31	Standard (25 Pa)	♦

For medium static pressure duct type (ARXH12–22KMTAP):

Function number	Setting value	Setting description	Factory setting
26	03	30 Pa	
	04	40 Pa	
	05	50 Pa	
	06	60 Pa	
	07	70 Pa	
	08	80 Pa	
	09	90 Pa	
	10	100 Pa	
	11	110 Pa	
	12	120 Pa	
	13	130 Pa	
	14	140 Pa	
	15	150 Pa	
	31	Standard (40 Pa)	♦
	32	Automatic airflow adjustment	

4-5 UNIT MULTI-SPLIT TYPE

6) Horizontal louver direction switching for dew condensation prevention (for Ceiling type only)

Automatically switches the position of the horizontal louver if the airflow direction is set at lower than the dew condensation limit position in cooling or drying operation.

Select suitable adjustment position according to the customer's preference.

Function number	Setting value	Setting description	Factory setting
28	00	Adjust to dew condensation limit position	♦
	01	Adjust to cooling standard position	

7) Room temperature control for indoor unit sensor

NOTE: If the remote sensor unit option is selected, perform this setting.

Depending on the installed environment, correction of the room temperature sensor may be required. Select the appropriate control setting according to the installed environment.

The temperature of the room temperature sensor is corrected as follows:

Corrected temp. = Temp. of the room temp. sensor - Correction temp. value

Example of correction:

When the temperature of the room temp. sensor is 26°C and the setting value is "03" (-1.0°C), corrected temp. will be 27°C (26°C - [-1.0°C]).

The temperature correction values show the difference from the Standard setting "00" (manufacturer's recommended value).

Function number		Setting value	Setting description		Factory setting
30 (For cooling)	31 (For heating)	00	Standard setting		♦
		01	No correction 0.0°C		
		02	-0.5°C	More cooling Less heating	
		03	-1.0°C		
		04	-1.5°C		
		05	-2.0°C		
		06	-2.5°C		
		07	-3.0°C		
		08	-3.5°C		
		09	-4.0°C		
		10	+0.5°C	Less cooling More heating	
		11	+1.0°C		
		12	+1.5°C		
		13	+2.0°C		
		14	+2.5°C		
		15	+3.0°C		
		16	+3.5°C		
		17	+4.0°C		

8) Room temperature control for wired remote controller sensor (for other than Floor type and KN models in Wall-mounted type)

Depending on the installed environment, correction of the wire remote temperature sensor may be required. Select the appropriate control setting according to the installed environment.

To change this setting, set Function 42 to Both “01”.

Ensure that the Thermo Sensor icon is displayed on the remote controller screen.

Function number		Setting value	Setting description		Factory setting
35 (For cooling)	36 (For heating)	00	Standard setting		♦
		01	No correction 0.0°C		
		02	-0.5°C	More cooling Less heating	
		03	-1.0°C		
		04	-1.5°C		
		05	-2.0°C		
		06	-2.5°C		
		07	-3.0°C		
		08	-3.5°C		
		09	-4.0°C		
		10	+0.5°C	Less cooling More heating	
		11	+1.0°C		
		12	+1.5°C		
		13	+2.0°C		
		14	+2.5°C		
		15	+3.0°C		
		16	+3.5°C		
		17	+4.0°C		

9) Auto restart

Enables or disables automatic restart after a power interruption.

Function number	Setting value	Setting description	Factory setting
40	00	Enable	♦
	01	Disable	

NOTE: Auto restart is an emergency function such as for power outage etc. Do not attempt to use this function in normal operation. Be sure to operate the unit by remote controller or external device.

10) Room temperature sensor switching (for other than KN models in Wall-mounted type)

When using the wired remote controller temperature sensor, change the setting to “Both” (01).

Function number	Setting value	Setting description	Factory setting
42	00	Indoor unit	♦
	01	Both	

00: Sensor on the indoor unit is active.

01: Sensors on both indoor unit and wired remote controller are active.

NOTES:

- Remote controller sensor must be turned on by using the remote controller.
- When using the remote sensor unit, set to “00” or set to “01” and then select “indoor unit sensor” from wired remote controller.

4-5 UNIT MULTI-SPLIT TYPE

11) Remote controller custom code

(Only for wireless remote controller)

The indoor unit custom code can be changed. Select the appropriate custom code.

Function number	Setting value	Setting description	Factory setting
44	00	A	♦
	01	B	
	02	C	
	03	D	

12) External input control

“Operation/Stop” mode or “Forced stop” mode can be selected.

Function number	Setting value	Setting description	Factory setting
46	00	Operation/Stop mode 1 (Remote controller enabled)	♦
	01	(Setting prohibited)	
	02	Forced stop mode	
	03	Operation/Stop mode 2 (Remote controller disabled)	

NOTE: If this function is necessary, the rotary switch on the External input and output PCB should be set to 1.

13) Room temperature sensor switching (Aux.) (for other than Floor type and KN models in Wall-mounted type)

To use the temperature sensor on the wired remote controller only, change the setting to “Wired remote controller” (01).

This function will only work if the function setting 42 is set at “Both” (01).

When the setting value is set to “Both” (00), more suitable control of the room temperature is possible by setting function setting 30 and 31 too.

Function number	Setting value	Setting description	Factory setting
48	00	Both	♦
	01	Wired remote controller	

14) Indoor unit fan control for energy saving for cooling (for other than Floor type)

Enables or disables the power-saving function by controlling the indoor unit fan rotation when the outdoor unit is stopped during cooling operation.

Function number	Setting value	Setting description	Factory setting
49	00	Disable	
	01	Enable	
	02	Remote controller	♦

00: When the outdoor unit is stopped, the indoor unit fan operates continuously following the setting on the remote controller.

01: When the outdoor unit is stopped, the indoor unit fan operates intermittently at a very low speed.

02: Enable or disable this function by remote controller setting.

NOTE: Set to “00” or “01” when connecting a remote controller that cannot set the Fan control for energy saving function or connecting a network converter. To confirm if the remote controller has this setting, refer to the operating manual of each remote controller.

4-5 UNIT MULTI-SPLIT TYPE

15) Switching functions for external output terminal (For other than KETA[-B] and KN models in Wall-mounted type)

Functions of the external output terminal can be switched. For details, refer to “External input and output”.

Function number	Setting value	Setting description	Factory setting
60	00	Operation status	♦
	01—08	(Setting prohibited)	
	09	Error status	
	10	Indoor unit fan operation status	
	11	(Setting prohibited)	

16) Auto mode type (for Medium static pressure duct type [ARXH12–22KMTAP])

Switches the setting method of the auto mode between single or dual (cooling and heating.)
Set the primary indoor unit using a wired remote controller for heat pump systems.

Function number	Setting value	Setting description	Factory setting
68	00	Single setpoint auto mode	♦
	01	Dual setpoint auto mode	

NOTE: The auto mode type setting is available only if a compatible operating device is connected.

17) Deadband value (for Medium static pressure duct type [ARXH12–22KMTAP])

Sets the minimum temperature of the deadband in the dual setpoint auto mode (the setting value 01 of the function setting number 68: Auto mode type.)

Function number	Setting value	Setting description	Factory setting
69	00	0°C	♦
	01	0.5°C	
	02	1.0°C	
	03	1.5°C	
	04	2.0°C	
	05	2.5°C	
	06	3.0°C	
	07	3.5°C	
	08	4.0°C	
	09	4.5°C	

NOTE: The deadband setting is available only if a compatible operating device is connected.

15-7. Wired remote controller (UTY-RNNYM)

DIP switch 1	SW1	Prohibited
	SW2	Dual remote controller setting
	SW3	Prohibited
	SW4	°F/°C switch
	SW5	Prohibited
	SW6	Memory backup setting

* Do not use DIP switch 2.

■ Switch location

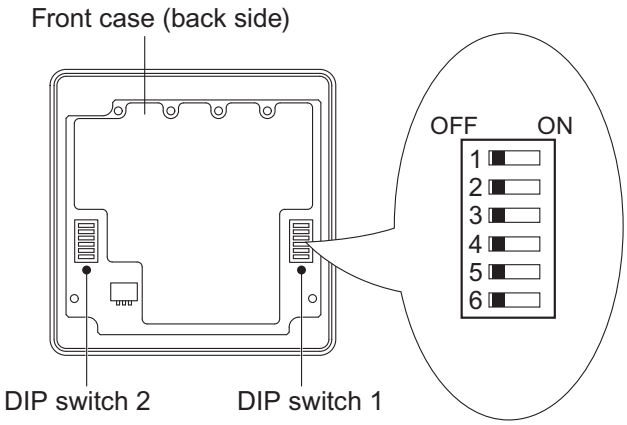

■ DIP switch 1 setting

● SW2: Dual remote controller setting

Set the remote controller SW2 according to the following table.

Number of remote controller	Primary unit	Secondary unit	Factory setting
	SW2	SW2	
1 (Normal)	OFF	—	♦
2 (Dual)	OFF	ON	

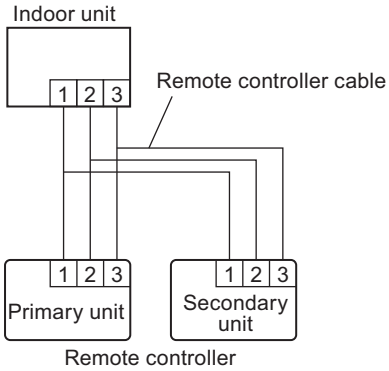

● SW4: Switching temperature unit °F / °C

Displayed temperature unit can be switched between Fahrenheit (°F) and Celsius (°C).

SW4	Fahrenheit (°F) / Celsius (°C)	Factory setting
OFF	°C	♦
ON	°F	

4-5 UNIT
MULTI-SPLIT TYPE

● SW6: Memory backup setting

Set to “ON” to use batteries for the memory backup.

When batteries are not used, all of settings stored in memory will be deleted if there is a power failure.

SW6	Memory backup	Factory setting
OFF	Disable	♦
ON	Enable	

15-8. Wired remote controller (UTY-RVNYM)

DIP switch 1	SW1	Memory backup setting
	SW2	Dual remote controller setting

■ Switch location

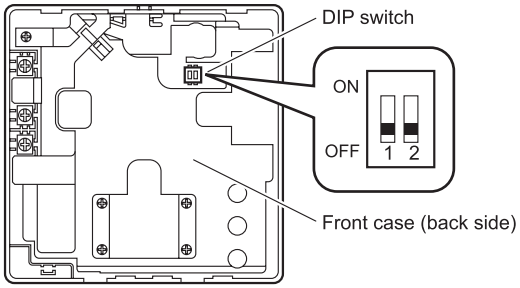

■ DIP switch setting

● SW1: Memory backup setting

Set to “ON” to use batteries for the memory backup.
When batteries are not used, all of settings stored in memory will be deleted if there is a power failure.

SW1	Memory backup	Factory setting
OFF	Disable	♦
ON	Enable	

● SW2: Dual remote controller setting

Set the remote controller SW2 according to the following table.

Number of remote controller	Primary unit	Secondary unit	Factory setting
	SW2	SW2	
1 (Normal)	OFF	—	♦
2 (Dual)	OFF	ON	

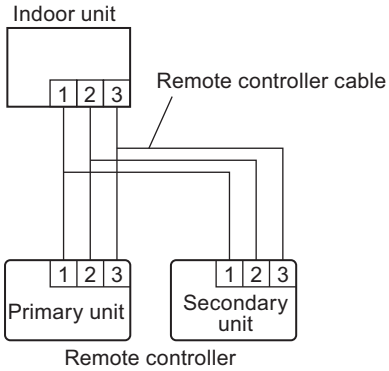

15-9. Wired remote controller (UTY-RLRY)

DIP switch	Memory backup setting

■ Switch location

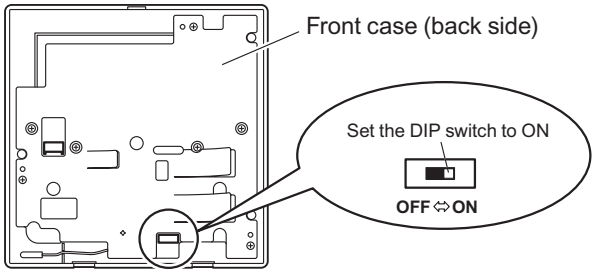

■ Dip switch setting

● SW1: Memory backup setting

Set to “ON” to use batteries for the memory backup.

When batteries are not used, all of settings stored in memory will be deleted if there is a power failure.

SW1	Memory backup	Factory setting
OFF	Disable	♦
ON	Enable	

15-10. Wired remote controller (UTY-RNRYZ*)

DIP switch	Memory backup setting

■ Switch location

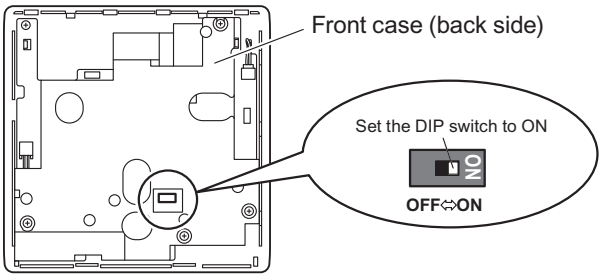

■ Dip switch setting

● SW1: Memory backup setting

Set to “ON” to use batteries for the memory backup.

When batteries are not used, all of settings stored in memory will be deleted if there is a power failure.

SW1	Memory backup	Factory setting
OFF	Disable	♦
ON	Enable	

15-11. Simple remote controller (UTY-RSNYM)

DIP switch	SW1	Prohibited
	SW2	Dual remote controller setting
	SW3	°F/°C switch
	SW4	Prohibited
	SW5	Prohibited
	SW6	Prohibited

■ Switch location

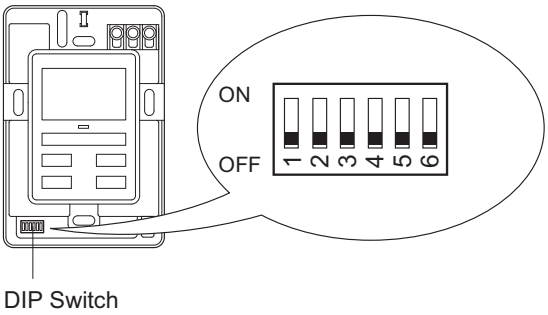

■ DIP switch setting

● SW2: Dual remote controller setting

Set the remote controller SW2 according to the following table.

Number of remote controller	Primary unit	Secondary unit	Factory setting
	SW2	SW2	
1 (Normal)	OFF	—	♦
2 (Dual)	OFF	ON	

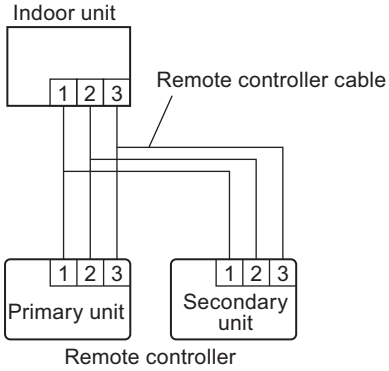

● SW3: Switching temperature unit °F / °C

Displayed temperature unit can be switched between Fahrenheit (°F) and Celsius (°C).

SW3	Fahrenheit (°F) / Celsius (°C)	Factory setting
OFF	°C	♦
ON	°F	

16. Accessories

16-1. Compact cassette type

■ Models: AUXG07–22KVLA

Part name	Exterior	Qty	Part name	Exterior	Qty
Operation manual		1	Drain hose insulation		1
Operation manual (CD-ROM)		1	Hose band		1
Installation manual		1	Coupler heat insulation (large)		1
Template (Carton top)		1	Coupler heat insulation (small)		1
M10 nut A (with flange)		4	Cable tie		2
M10 nut B (with spring lock washer)		4	Wire cramper		1
Drain hose		1			

16-2. Mini duct type

■ Models: ARXG07–14KSLAP

Part name	Exterior	Qty	Part name	Exterior	Qty
Operation manual		1	Drain hose		1
Operation manual (CD-ROM)		1	Hose band		1
Installation manual		1	Drain hose insulation B		1
Installation template (Carton top)		1	Washer		8
Cable tie (large)		4	Coupler heat insulation (large)		1
Cable tie (medium)		3	Coupler heat insulation (small)		1
Filter (small)		2	Insulation (For electrical wiring)		2

4-5 UNIT
MULTI-SPLIT TYPE

■ Model: ARXG18KSLAP

Part name	Exterior	Qty	Part name	Exterior	Qty
Operation manual	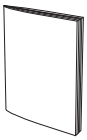	1	Drain hose	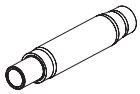	1
Operation manual (CD-ROM)	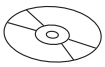	1	Hose band		1
Installation manual		1	Drain hose insulation B		1
Installation template (Carton top)	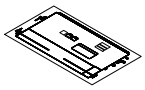	1	Washer		8
Cable tie (large)		4	Coupler heat insulation (large)	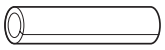	1
Cable tie (medium)		3	Coupler heat insulation (small)	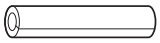	1
Filter (large)		2	Insulation (For electrical wiring)	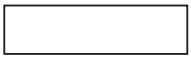	2

16-3. Slim duct type

■ Models: ARXG07–18KLLAP

Part name	Exterior	Qty	Part name	Exterior	Qty
Operation manual		1	Cable tie (Large)		4
Installation manual		1	Cable tie (Small)		3
Installation template		1	Drain hose		1
Washer		8	Hose band		1
Coupler heat insulation (Large)		1	Drain hose insulation B		1
Coupler heat insulation (Small)		1	Filter (Small) (For 7/9/12/14 models)		2
Filter (Large) (For 18 model)		2			

16-4. Medium static pressure duct type

■ Model: ARXG22KMLB

Part name	Exterior	Qty	Part name	Exterior	Qty
Operation manual		1	Cable tie (medium)		1
Operation manual (CD-ROM)		1	Cable tie (small)		1
Installation manual		1	Coupler heat insulation (large)		1
Hanger		4	Coupler heat insulation (small)		1
Drain hose insulation		1	M10 nut A (with flange)		4
Cable tie (large)		1	M10 nut B (with spring lock washer)		4

■ Models: ARXH12–22KMTAP

Part name	Exterior	Qty	Part name	Exterior	Qty
Operation manual		1	Cable tie (large)		4
Operation manual (CD-ROM)		1	Cable tie (medium)		1
Installation manual		1	Cable tie (small)		1
Washer		8	Drain hose insulation		1
Coupler heat insulation (large)		1	Drain hose		1
Coupler heat insulation (small)		1	Hose band		1

16-5. Wall mounted type

■ Models: ASEH07–14KMCG, ASEH07–14KMCG-B, and ASEH07–14KGTG

Part name	Exterior	Qty	Part name	Exterior	Qty
Operation manual		1	Cloth tape		1
Installation manual		1	Self-tapping screw (large)		5
Remote controller		1	Self-tapping screw (small)		2
Battery		2	Wall hook bracket		1
Remote controller holder		1	Filter holder		2
Installation spacer		1	Air cleaning filters		1
Operation manual (CD-ROM)		1			

■ Models: ASEG07–14KETF and ASEG07–14KETF-B

Part name	Exterior	Qty	Part name	Exterior	Qty
Operation manual		1	Cloth tape		1
Operation manual (CD-ROM)		1	Self-tapping screw (large)		5
Installation manual		1	Self-tapping screw (small)		2
Remote controller		1	Wall hook bracket		1
Battery		2	Filter holder		2
Remote controller holder		1	Air cleaning filters		1
Template (for pipe cover cutting)		1			

■ Models: ASEH05–12KNCA

Part name	Exterior	Qty	Part name	Exterior	Qty
Operation manual		1	Self-tapping screw (Large)		5
Installation manual		1	Self-tapping screw (Small)		2
Remote controller		1	Wall hook bracket		1
Battery		2	Remote controller holder		1
Installation spacer		1	Cloth tape		1
Operation manual (CD-ROM)		1			

4-5 UNIT
MULTI-SPLIT TYPE

■ Models: ASEG18–24KMTE

Part name	Exterior	Qty	Part name	Exterior	Qty
Operation manual	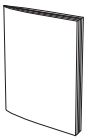	1	Cloth tape	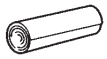	1
Operation manual (CD-ROM)	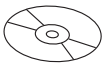	1	Self-tapping screw (large)		5
Installation manual		1	Self-tapping screw (small)		2
Remote controller	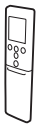	1	Wall hook bracket	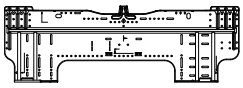	1
Remote controller holder		2	Filter holder		2
Battery	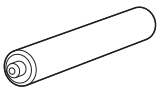	2	Air cleaning filters	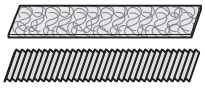	1

16-6. Ceiling type

■ Models: ABEG18–22KRTA

Part name	Exterior	Qty	Part name	Exterior	Qty
Operation manual		1	Insulation		1
Operation manual (CD-ROM)		1	Drain hose		1
Installation manual		1	Hose band		1
Template		1	Cable tie (large)		4
M10 nut A (with flange)		4	Cable tie (small)		1
M10 nut B (with spring lock washer)		4	Remote controller cable hole cap		1
Washer		8	Self-tapping screw (White)		6
Coupler heat insulation (large)		1	Self-tapping screw		3
Coupler heat insulation (small)		1			

16-7. Floor type

■ Models: AGEG09–14KVCA

Part name	Exterior	Qty	Part name	Exterior	Qty
Operation manual		1	Operation manual (CD-ROM)	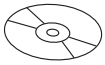	1
Installation manual		1	Cloth tape	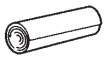	1
Wall hook bracket	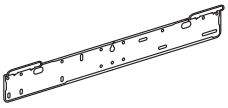	1	Self-tapping screws (large)		9
Remote controller	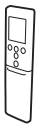	1	Self-tapping screws (small)		2
Battery	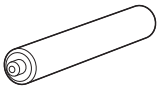	2	Air cleaning filters	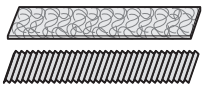	1
Remote controller holder		1			

17. Optional parts

17-1. Controllers

■ Lineup

Indoor unit type		Type			
		Wireless Remote Controller			
		AR-REM7E	AR-REW2E	AR-REW3E	AR-REW4E
Compact cassette		—	—	—	—
Mini duct		—	—	—	—
Slim duct		—	—	—	—
Medium static pressure duct	KMLB	—	—	—	—
	KMTAP	—	—	—	—
Floor		●	—	—	—
Ceiling		—	—	—	—
Wall mounted	KMCG(-B)	—	—	—	—
	KETF(-B)	—	—	—	●
	KGTG	—	—	●	—
	KNCA	—	—	—	—
	KMTE	—	●	—	—

Indoor unit type		Type		
		Wireless Remote Controller		
		AR-RMB1E(-B)	AR-RPF4E	UTY-LNTY
Compact cassette		—	—	○
Mini duct		—	—	—
Slim duct		—	—	—
Medium static pressure duct	KMLB	—	—	—
	KMTAP	—	—	—
Floor		—	—	—
Ceiling		—	—	—
Wall mounted	KMCG(-B)	●	—	—
	KETF(-B)	—	—	—
	KGTG	—	—	—
	KNCA	—	●	—
	KMTE	—	—	—

Indoor unit type		Type			
		Wired Remote Controller			
		UTY-RNNYM	UTY-RVNYM	UTY-RVRY	UTY-RLRY
Compact cassette		○	○	○	○
Mini duct		○	○	○	○
Slim duct		○	○	○	○
Medium static pressure duct	KMLB	○	○	○	○
	KMTAP	—	—	○	○
Floor		—	—	○*2	○*2
Ceiling		—	—	○	○
Wall mounted	KMCG(-B)	—	—	○*1	○*1
	KETF(-B)	—	—	○*1	○*1
	KGTG	—	—	○*1	○*1
	KNCA	—	—	—	—
	KMTE	—	—	○*1	○*1

Indoor unit type		Type			
		Wired Remote Controller		IR Receiver Kit with Wireless Remote Controller	
		UTY-RNRYZ*	UTY-RCRYZ1	UTY-LBTYM	UTY-LBTYH
Compact cassette		○	○	—	—
Mini duct		○	○	○	—
Slim duct		○	○	○	—
Medium static pressure duct	KMLB	○	○	○	—
	KMTAP	○	○	○	—
Floor		○*1	○*1	—	—
Ceiling		○	○	—	○
Wall mounted	KMCG(-B)	○*1	○*1	—	—
	KETF(-B)	○*1	○*1	—	—
	KGTG	○*1	○*1	—	—
	KNCA	—	—	—	—
	KMTE	—	—	—	—

Indoor unit type		Type		
		Simple Remote Controller		
		UTY-RSNYM	UTY-RSRY	UTY-RHRY
Compact cassette		○	○	○
Mini duct		○	○	○
Slim duct		○	○	○
Medium static pressure duct	KMLB	○	○	○
	KMTAP	—	○	○
Floor		—	○*2	○*2
Ceiling		—	○	○
Wall mounted	KMCG(-B)	—	○*1	○*1
	KETF(-B)	—	○*1	○*1
	KGTG	—	○*1	○*1
	KNCA	—	—	—
	KMTE	—	○*1	○*1

●: Accessory, ○: Optional, —: Not applicable

- *1: Optional Communication Kit (UTY-TWRXZ2) is necessary for the installation.
- *2: Optional Communication Kit (UTY-TWRXZ3) is necessary for the installation.

4-5 UNIT
MULTI-SPLIT TYPE

■ Parts

Exterior	Part name	Model name	Summary
	Wired Remote Controller (Touch Panel)	UTY-RVRY	Remote controller that provides the functions you need in a sleek design that uniquely transforms itself to blend with any interior. Wire type: Non-polar 2-wire
	Wired Remote Controller (Touch Panel)	UTY-RNRYZ*	Easy finger touch operation with LCD panel. Backlit LCD enables easy operation in a dark room. Wire type: Non-polar 2-wire
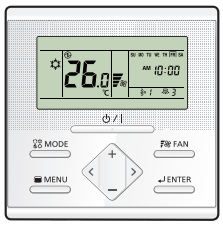	Wired Remote Controller	UTY-RLRY	High visibility and easy operation. Room temperature can be accurately controlled using the thermo sensor. Wire type: Non-polar 2-wire
	Compact Wired Remote Controller	UTY-RCRYZ1	Compact body and easy operation. Room temperature can be accurately controlled using the thermo sensor. Wire type: Non-polar 2-wire
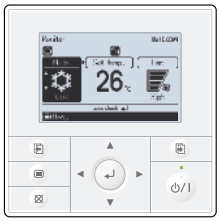	Wired Remote Controller	UTY-RVNYM	Large and full-dot liquid crystal screen, wide and large keys easy to press, user-intuitive arrow key. Wire type: Polar 3-wire
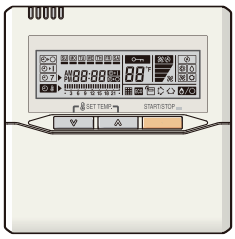	Wired Remote Controller	UTY-RNNYM	Room temperature can be controlled by detecting the temperature accurately with thermo sensor. Wire type: Polar 3-wire
	Simple Remote Controller	UTY-RSRY	Compact remote controller concentrates on the basic functions such as Start/Stop, fan control, temperature setting, and operation mode. Wire type: Non-polar 2-wire

Exterior	Part name	Model name	Summary
	Simple Remote Controller	UTY-RHRY	Compact remote controller concentrates on the basic functions such as Start/Stop, fan control, and temperature setting. Wire type: Non-polar 2-wire
	Simple Remote Controller	UTY-RSNYM	Compact remote controller concentrates on the basic functions such as Start/Stop, fan control, temperature setting, and operation mode. Wire type: Polar 3-wire
	IR Receiver Kit with Wireless Remote Controller	UTY-LBTYM	Unit control is performed by Wireless Remote Controller
	IR Receiver Kit with Wireless Remote Controller	UTY-LBTYH	Unit control is performed by Wireless Remote Controller.
	Wireless Remote Controller	UTY-LNTY	Unit control is performed by Wireless Remote Controller.

NOTES:

- Available functions may differ by the remote controller. For details, refer to the operation manual.
- When using the group controlling system of the Wired Remote Controller, using WLAN Adapter is prohibited.

4-5 UNIT
MULTI-SPLIT TYPE

17-2. Cassette grille

■ Lineup

Indoor unit type	Model
Compact cassette	UTG-UFYF-W

■ Part

Exterior	Part name	Model name	Summary
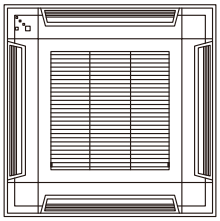	Cassette Grille	UTG-UFYF-W	This cassette grille can be installed appropriately on the grid type ceiling common in the office.

17-3. Others

■ Lineup

Indoor unit type		Type			
		Air Outlet Shutter Plate	Insulation Kit for High Humidity	Fresh Air Intake Kit	Half Concealed Kit
		UTR-YDZB	UTZ-KXGC	UTZ-VXAA	UTR-STA
Compact cassette		○	○	○	—
Mini duct		—	—	—	—
Slim duct		—	—	—	—
Medium static pressure duct	KMLB	—	—	—	—
	12-18KMTAP	—	—	—	—
	22KMTAP	—	—	—	—
Floor		—	—	—	○
Ceiling		—	—	—	—
Wall mounted	KMCG(-B)	—	—	—	—
	KETF(-B)	—	—	—	—
	KGTG	—	—	—	—
	KNCA	—	—	—	—
	KMTE	—	—	—	—

Indoor unit type		Type			
		Auto Louver Grille Kit	Remote Sensor Unit		External Switch Controller
		UTD-GXTA-W UTD-GXTB-W	UTY-XSZX	UTY-XSZXZ*	UTY-TERX
Compact cassette		—	—	—	○
Mini duct		○	○	○	○
Slim duct		○	○	○	○
Medium static pressure duct	KMLB	—	○	○	○
	12-18KMTAP	—	○	○	○
	22KMTAP	—	○	○	○
Floor		—	—	—	○*2
Ceiling		—	—	—	○
Wall mounted	KMCG(-B)	—	—	—	○*1
	KETF(-B)	—	—	—	○*1
	KGTG	—	—	—	○*1
	KNCA	—	—	—	—
	KMTE	—	—	—	○*1

Indoor unit type		Type				
		External Connect Kit			External Input and Output PCB	
		UTY-XWZX	UTY-XWZXZ5	UTY-XWZXZG	UTY-XCSXZ2	UTY-XCSX
Compact cassette		—	—	○	—	○
Mini duct		—	—	○	—	—
Slim duct		—	—	○	—	—
Medium static pressure duct	KMLB	—	—	○	—	—
	12-18KMTAP	—	—	○	—	○
	22KMTAP	—	—	○	—	○
Floor		—	○	—	—	—
Ceiling		—	—	○	—	○
Wall mounted	KMCG(-B)	○	○	—	○	—
	KETF(-B)	○	○	—	○	—
	KGTG	○	○	—	○	—
	KNCA	—	—	—	—	—
	KMTE	○	○	—	○	—

Indoor unit type		Type			
		KNX Convertor	Network Converter		Modbus Converter
		UTY-VKSX	UTY-VTGX	UTY-VTGXV	UTY-VMSX
Compact cassette		○	○	○	○
Mini duct		○	○	○	○
Slim duct		○	○	○	○
Medium static pressure duct	KMLB	○	○	○	○
	12-18KMTAP	○	○	○	○
	22KMTAP	○	○	○	○
Floor		○	○*2	○*2	○
Ceiling		○	○	○	○
Wall mounted	KMCG(-B)	○	○*1	○*1	○
	KETF(-B)	○	○*1	○*1	○
	KGTG	○	○*1	○*1	○
	KNCA	—	—	—	—
	KMTE	○	○*1	○*1	○

Indoor unit type		Type		
		WLAN Adapter*3		
		UTY-TFSXF2	UTY-TFSXZ1	UTY-TFSXJ3
Compact cassette		—	○	—
Mini duct		—	○	—
Slim duct		—	○	—
Medium static pressure duct	KMLB	—	○	—
	12-18KMTAP	—	○	○
	22KMTAP	—	○	○
Floor		—	○	—
Ceiling		—	○	—
Wall mounted	KMCG(-B)	—	—	—
	KETF(-B)	—	—	—
	KGTG	—	—	—
	KNCA	—	—	—
	KMTE	○	—	—

Indoor unit type		Type				
		Communication Kit		Air Cleaning Filter		
		UTY-TWRXZ2	UTY-TWRXZ3	UTR-FA16-5	UTD-HFNB	UTD-HFNC
Compact cassette		—	—	—	—	—
Mini duct		—	—	—	—	—
Slim duct		—	—	—	—	—
Medium static pressure duct	KMLB	—	—	—	—	—
	12-18KMTAP	—	—	—	—	○
	22KMTAP	—	—	—	○	—
Floor		—	○	—	—	—
Ceiling		—	—	—	—	—
Wall mounted	KMCG(-B)	○	—	○	—	—
	KETF(-B)	○	—	—	—	—
	KGTG	○	—	—	—	—
	KNCA	—	—	○	—	—
	KMTE	○	—	—	—	—

Indoor unit type		Type				
		Square Flange	Round Flange	Long-life Filter		
		UTD-SF045T	UTD-RF204	UTD-LF25NA	UTD-LFDB	UTD-LFDC
Compact cassette		—	—	—	—	—
Mini duct		—	—	—	—	—
Slim duct		—	—	—	—	—
Medium static pressure duct	KMLB	○	○	○	—	—
	12-18KMTAP	—	—	—	—	○
	22KMTAP	—	—	—	○	—
Floor		—	—	—	—	—
Ceiling		—	—	—	—	—
Wall mounted	KMCG(-B)	—	—	—	—	—
	KETF(-B)	—	—	—	—	—
	KGTG	—	—	—	—	—
	KNCA	—	—	—	—	—
	KMTE	—	—	—	—	—

Indoor unit type		Type		
		Drain Pump Unit	External Input and Output PCB Box	
		UTZ-PX1NBA	UTZ-GXDA	UTZ-GXEA
Compact cassette		—	—	—
Mini duct		—	—	—
Slim duct		—	—	—
Medium static pressure duct	KMLB	○	—	—
	12-18KMTAP	—	○	—
	22KMTAP	—	○	—
Floor		—	—	—
Ceiling		—	—	○
Wall mounted	KMCG(-B)	—	—	—
	KETF(-B)	—	—	—
	KGTG	—	—	—
	KNCA	—	—	—
	KMTE	—	—	—

●:Accessory, ○: Optional, —: Not applicable

- *1: Optional Communication Kit (UTY-TWRXZ2) is necessary for the installation.
- *2: Optional Communication Kit (UTY-TWRXZ3) is necessary for the installation.
- *3: For details of wireless LAN control, refer to “Design & Technical manual” or “Setting manual” of WLAN control system.

NOTE: Combined use of Modbus Converter, KNX Convertor, and WLAN Adapter is not allowed.

4-5 UNIT
MULTI-SPLIT TYPE

■ Parts

Exterior	Part name	Model name	Summary
	Remote Sensor Unit	UTY-XSZX	Thermo-sensor for sensing the temperature of arbitrary place in the room.
	Remote Sensor Unit	UTY-XSZXZ*	Thermo-sensor for sensing the temperature of arbitrary place in the room.
	Auto Louver Grille Kit	UTD-GXTA-W	Width: 683 mm For 07, 09, 12, and 14 models
	Auto Louver Grille Kit	UTD-GXTB-W	Width: 883 mm For 18 model
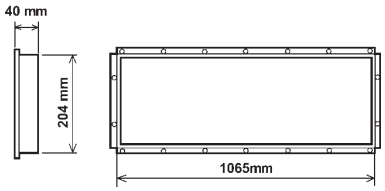	Square Flange	UTD-SF045T	Both the Square Flange and the Round Flange can be selected.
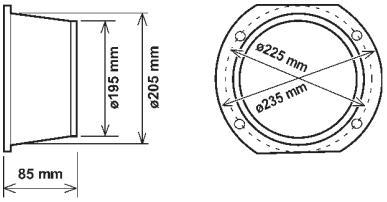	Round Flange	UTD-RF204	Round Flange is used when the fresh-air duct is installed.
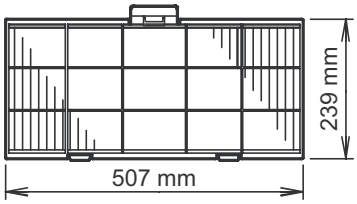	Long-life Filter	UTD-LF25NA	Long-life Filter can be mounted to the indoor unit.
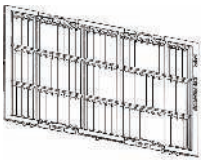	Long-life Filter	UTD-LFDC	Long-life Filter can be mounted to the indoor unit. For 12, 14, and 18 models
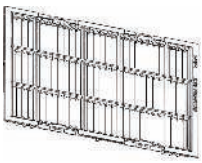	Long-life Filter	UTD-LFDB	Long-life Filter can be mounted to the indoor unit. For 22 model

Exterior	Part name	Model name	Summary
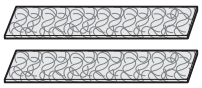	Air Cleaning Filter	UTR-FA16-5	Air Cleaning Filter can be mounted to the indoor unit. (For antibacterial)
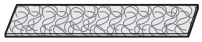	Air Cleaning Filter	UTD-HFNB	Air Cleaning Filter can be mounted to the indoor unit.
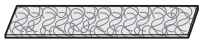	Air Cleaning Filter	UTD-HFNC	Air Cleaning Filter can be mounted to the indoor unit.
	Drain Pump Unit	UTZ-PX1NBA	Optional drain lift up mechanism allows more flexible installation.
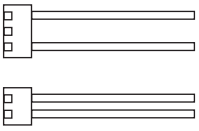	External Connect Kit	UTY-XWZX	Use to connect with various peripheral devices and air conditioner PCB.
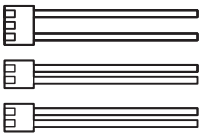	External Connect Kit	UTY-XWZXZ5	Required when external device is connected.
	External Connect Kit	UTY-XWZXZG	Use to connect with various peripheral devices and air conditioner PCB. For control output port.
	Air Outlet Shutter Plate	UTR-YDZB	Installed at the air outlet when 3-directions mode is performed.
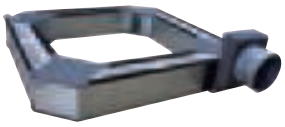	Fresh Air Intake Kit	UTZ-VXAA	By attaching Fresh Air Intake Kit to the indoor unit, it can be taken in fresh air of up to 10% of “high” air volume of the indoor unit.
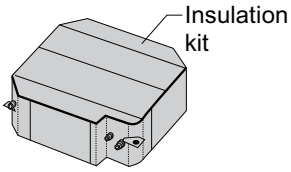	Insulation Kit for High Humidity	UTZ-KXGC	Install when the under-roof condition is expected to be the humidity of over 80% and the temperature of over 30 °C.
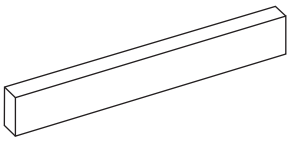	Half Concealed Kit	UTR-STA	Used for the indoor unit installing of half concealed.
	External Input and Output PCB	UTY-XCSX	Use to connect with external devices and air conditioner PCB.
	External Input and Output PCB	UTY-XCSXZ2	Use to connect with external devices and air conditioner PCB. Optional External Connect Kit might be required to connect locally purchased devices via this PCB.

Exterior	Part name	Model name	Summary
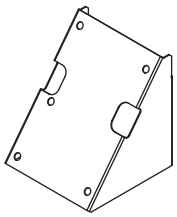	External Input and Output PCB Box	UTZ-GXDA	For installing the External input and output PCB.
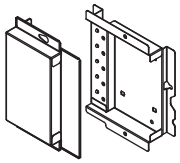	External Input and Output PCB Box	UTZ-GXEA	For installing the External input and output PCB. For Ceiling type
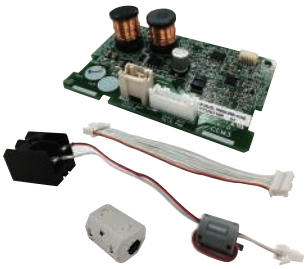	Communication Kit	UTY-TWRXZ3	Use to connect Non-polar 2-core wired remote controller.
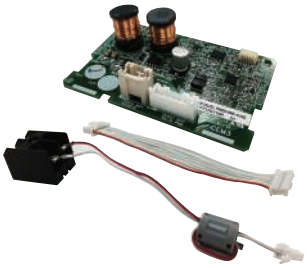	Communication Kit	UTY-TWRXZ2	Use to connect Non-polar 2-core wired remote controller.
	WLAN Adapter	UTY-TFSXZ1 UTY-TFSXJ3	Remotely manage an air conditioning system using mobile devices such as smartphones and tablets. For connection indoor unit with UART interface. Appropriate application for each region is required to use this option. For details, contact FGL sales company.
	WLAN Adapter	UTY-TFSXF2	Remotely manage an air conditioning system using mobile devices such as smartphones and tablets. Appropriate application for each region is required to use this option. For details, contact FGL sales company.
	Modbus Converter	UTY-VMSX	For connection between indoor unit with UART interface and a Modbus open network.
	KNX Convertor	UTY-VKSX	For connection between indoor unit with UART interface and a KNX open network.

Exterior	Part name	Model name	Summary
	Network Converter	UTY-VTGX	This converter is required when connecting single split system to VRF network system. Optional Communication Kit is necessary for installation.
	Network Converter (AC power supply)	UTY-VTGXV	This converter is required when connecting single split system to VRF network system. Optional Communication Kit is necessary for installation.
	External Switch Controller	UTY-TERX	Air conditioner switching can be controlled by connecting other external sensor switches. Optional Communication Kit is necessary for installation.

4-5 UNIT
MULTI-SPLIT TYPE

4-5 UNIT MULTI-SPLIT TYPE

18. Indoor unit installation precautions

NOTE: The information listed below are general precautions.
Some models also include items that do not apply.

18-1. Places where prohibited for use

- Places where there is a danger of combustible gas leakage.
- Places where sulfur gas, chlorine gas, acid, alkali, or other matter which effects equipment is generated.
- Places where there is a lot of oil splash and steam such as kitchen or machinery room.
- Places where machinery which generates high frequencies is used.
- Ocean beaches and other areas where there is a lot of salt.
- Places where carbon fibers or any kind of powder suspended in the air.
- Inside of vehicles, ships, and other conveyances.
- Places where voltage fluctuations are large such as a factory.

18-2. Points to remember when installing

- The product shall be installed at a place which can withstand the weight and vibration of the indoor.
- To allow maintenance after refrigerant piping, drain piping, and the connection/installation of electric wiring, provide an maintenance space and an inspection port, as required.
  Maintenance space is shown in "Dimensions" on page 33.
- Be careful when installing the unit at the following places.

Condition	Contents	Countermeasures (Reference)
When the ceiling is high.	If the indoor unit is installed where the installation height given in the installation manual is exceeded, the temperature difference between the floor and ceiling of the room will be large and the heating effect will be poor. Moreover, even if the indoor unit is installed within the installation height, a similar phenomena will occur when installed in a room in which the doors are opened and closed frequently and hot air circulation is obstructed by furniture such as desks or chairs.	1. Switch the setting to the high ceiling mode. 2. Install a circulator. 3. Arrange the furniture in the room so that it does not obstruct the hot air.
When lower level directly contacts the outside air.	When the lower level of the room is a semi-open space such as warehouse or parking lot the surface temperature of the flooring will become low and the radiation of cold from the floor will increase. In this case, even if the room temperature is suitable, you may feel the foot level is cold.	
When the airflow distribution is poor.	When an indoor unit is installed in a position where the outlet airflow will directly contact people, a draft may be felt. In addition, when there are obstructions in the path of the intake and outlet airflow, the air distribution may become extremely bad.	1. Adjust the louver fins or take other measures matched to the site. 2. Change the indoor unit outlet.

Condition	Contents	Countermeasures (Reference)
When inside the ceiling is high temperature and high humidity.	When the indoor unit is installed where the inside of the ceiling is 30 °C RH80% or greater, the dew point temperature of the outer perimeter may become higher than the cabinet surface temperature and moisture will condense on the surface of the cabinet and water drops may fall inside the room. ("Figure 18-1 **Moist air curve**") In addition, the humidity may vary considerably the same as when the inside of the ceiling is close to hermetically sealed and used as the outside air intake path.	1. Add heat insulating material to the outside of the indoor unit cabinet. *Regarding the cassette type, use of optional High humidity correspondence kit is recommended. 2. Strengthen the heat insulating material of the refrigerant pipe and drain pipe too. ("Figure 18-2 **Work method when reinforcing the heat insulation of on-site piping**") 3. When the humidity inside the ceiling changes considerably, install a ventilation port.
When using an external duct.	When using an external duct to take in new fresh air, etc., condensation may form on the surface of the duct due to the effect of the outside air temperature and the humidity inside the ceiling.	Always perform heat insulation processing. (Heat insulating material: Glass wool 25 mm thick or more.)
When the remote controller installation site is bad.	If the cold or warm air blown out from the air conditioner directly contacts the thermostat section of the remote controller, the outlet temperature of the air conditioner may be sensed and room temperature control will be different from the room temperature, and “not cooled” or “not heated” or other trouble may occur. In addition, there is the possibility that the same kind of trouble may also occur when the remote controller is effected by direct sunlight.	1. Install the remote controller where it will not be directly exposed to the cold or hot air. 2. Install the remote controller where it will not be directly exposed to sunlight or strong lighting.
When installation environment is quiet.	When the wall mounted type was installed in a bedroom, living room, or other quiet place, the sound of the refrigerant flow may be sensed as noise and must be taken into account.	1. Plan installation of a model with external expansion valve. 2. Plan installation of a branch box farther from indoor unit. 3. Plan installation using another air conditioner.
When installing duct type in ceiling chamber system.	In the case of the ceiling chamber system (duct is not installed at indoor unit inlet side and room air is sucked into the indoor unit through the inside of the ceiling), the thermistor inside the indoor unit may not correctly detect the room temperature. • Heating operation: Room is not heated because the indoor unit is easily turned off by the thermostat. • Cooling operation: Room is too cold because the indoor unit is difficult to turn off by the thermostat.	Replace the indoor unit thermistor with optional remote sensor unit, and install the sensor where the room temperature can be correctly detected.
When the outlet air is sucked in at duct type.	Cooling operation does not cool the room and heating operation does not heat the room because the short circuited indoor unit is not turned on by the thermostat.	1. Reconsider the ventilation port construction. 2. Replace the indoor unit thermistor with optional Remote sensor unit, and install the sensor where the room temperature can be correctly detected.
When using the wireless remote controller.	Signals may not be received when using it in a room illuminated by an inverter fluorescent lamp.	Turn on the fluorescent lamp and check if the indoor unit receives the signals from the remote controller. If the indoor unit does not receive the signals, consult an authorized service personnel.
When installing the inverter type.	It may generate noise in TV sets, stereos and PCs.	The inverter type should be installed at a sufficient distance from these equipments.

4-5 UNIT MULTI-SPLIT TYPE

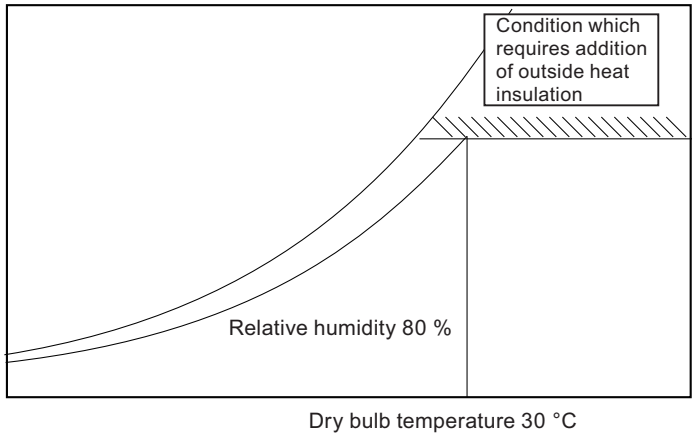

Figure 18-1 **Moist air curve**

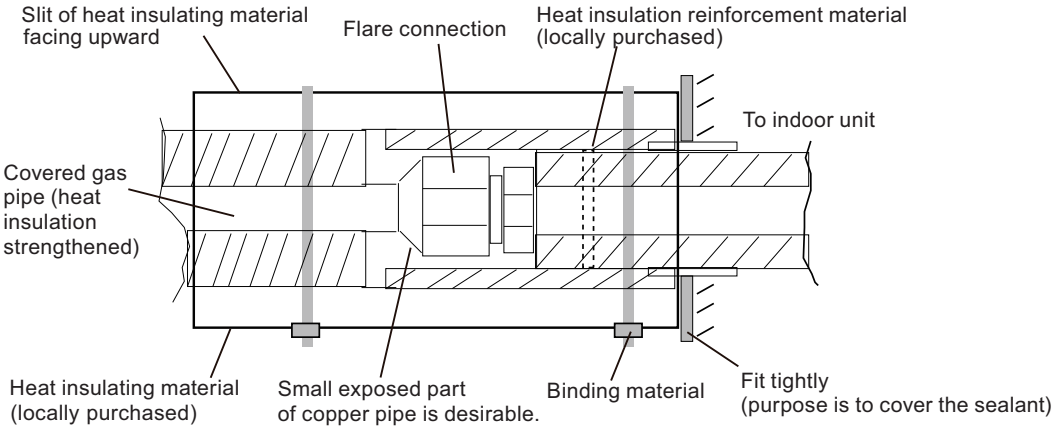

Figure 18-2 **Work method when reinforcing the heat insulation of on-site piping**

Part 2. OUTDOOR UNIT (4 UNITS TYPE)

MULTI-SPLIT TYPE:

AOEG30KBTA4

1. Specifications

Type					Inverter heat pump
Model name					**AOEG30KBTA4**
Power source					230 V 50 Hz
Available voltage range					198—264V
Standard combination of indoor unit					Wall mounted ×4
Capacity	Cooling	Rated		kW	8.0
				Btu/h	27,300
		Min.—Max.		kW	2.4—10.1
				Btu/h	8,200—34,500
	Heating	Rated		kW	9.6
				Btu/h	32,800
		Min.—Max.		kW	3.0—11.2
				Btu/h	10,200—38,100
Input power	Cooling	Rated		kW	2.05
		Max.			3.25
	Heating	Rated			2.11
		Max.			2.95
Current	Cooling	Rated		A	9.1
	Heating	Rated			9.4
EER	Cooling			kW/kW	3.9
COP	Heating				4.55
Starting current				A	9.4
Maximum operating current *1				A	18.5
Fan	Type × Q'ty				Propeller × 1
	Airflow rate	Cooling		m^3/h	2,400
		Heating			2,950
	Motor output			W	49
Sound pressure level *2	Cooling			dB (A)	50
	Heating				54
Heat exchanger	Dimension (H x W x D)			mm	Main1: 840 × 881 × 18.19 Main2: 840 × 851 × 18.19
	Fin pitch				Main 1: 1.3 Main 2: 1.3
	Rows × Stages				Main1: 1 × 40 Main2: 1 × 40
	Pipe type (Material)				Copper tube
	Fin type (Material)				Aluminum
Compressor	Type × Quantity				DC twin rotary × 1
	Motor output			W	1,450
Refrigerant	Type (Global warming potential)				R32 (675)
	Charge			g	2,200
Refrigerant oil	Type				RmM68AF
	Amount			cm^3	800
Enclosure	Material				Steel sheet
	Color				Beige (Approximate color of Munsell 10YR 7.5/1.0 NN)
Dimensions (H x W x D)	Net			mm	884 × 820 × 315
	Gross				1,058 × 1,027 × 445
Weight	Net			kg	55
	Gross				64
Connection pipe	Size	Liquid		mm (in)	Ø6.35 (Ø1/4) × 4
		Gas			Ø9.52 (Ø3/8) × 2 + Ø12.7 (Ø1/2) × 2
	Method				Flare
	Pre-charge length (Total)			m	40
	Maximum length (Total)				70
	Maximum length (Each)				25
	Minimum length (Total)				15
	Minimum length (Each)				2.5
	Maximum height difference between outdoor unit and each indoor units.				15
	Maximum height difference between indoor units.				10
Drain hose	Material				PP
	Tip diameter			mm	Ø13.0 (I.D.), Ø16.0 to Ø16.8 (O.D.)
Operation range	Cooling			°C	-10 to 46
	Heating				-15 to 24

NOTES:

- Specifications are based on the following conditions:
  - Power source of specifications: 230 V
  - Pipe length: 5 m, Height difference: 0 m [Outdoor unit—Indoor unit]
  - Cooling: Indoor temperature of 27.0 °CDB/19.0 °CWB, and outdoor temperature of 35 °CDB/24.0 °CWB.
  - Heating: Indoor temperature of 20.0 °CDB/15.0 °CWB, and outdoor temperature of 7.0 °CDB/6.0 °CWB.
- *1: Maximum operating current is the total current of the indoor unit and the outdoor unit.
- *2: Sound pressure level
  - Measured values in manufacturer's anechoic chamber.
  - Because of the surrounding sound environment, the sound levels measured in actual installation conditions might be higher than the specified values here.
- For other combination, refer to the combination table.
- The protective function might work when using it outside the operation range.
- This data is based on EN 14511 standard.

Specifications for ErP Lot10				
Model name				**AOEG30KBTA4**
Energy efficiency class	Cooling			A^{+++}
	Heating (Average)			A^{++}
Pdesign	Cooling		kW	8.0 (35 °C)
	Heating (Average)			6.5 (-10 °C)
SEER	Cooling		kWh/kWh	8.50
SCOP	Heating (Average)			4.60
Annual energy consumption	QCE		kWh/a	329
	QHE (Average)			1,978
Sound power level	Cooling	HIGH	dB (A)	63
	Heating			66

OUTDOOR UNIT
AOEG30KBTA4

2. Dimensions

2-1. Model: AOEG30KBTA4

Unit: mm

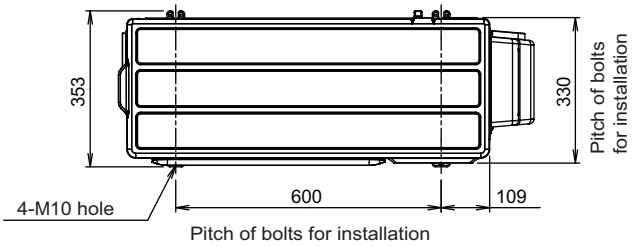

Top view

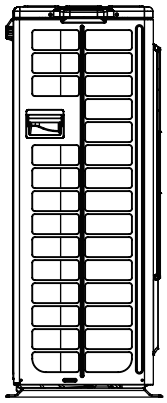

Side view

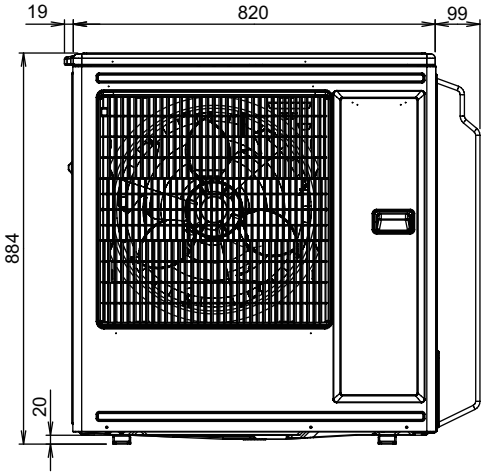

Front view

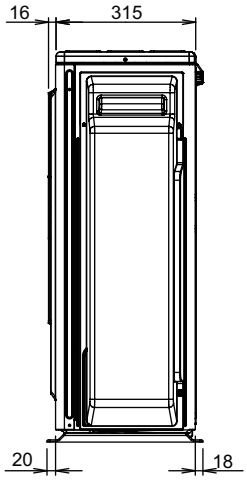

Side view

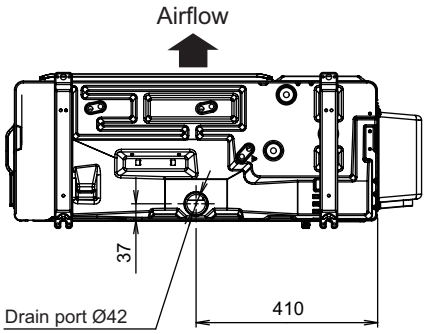

Bottom view

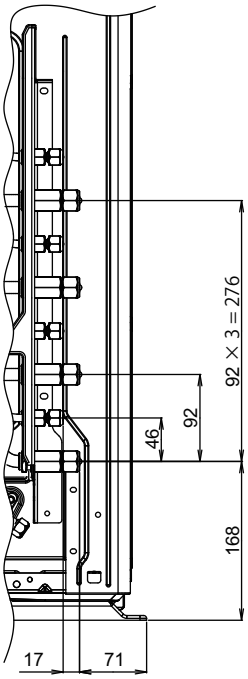

Side view (Valve part)

3. Installation space

3-1. Model: AOEG30KBTA4

OUTDOOR UNIT
AOEG30KBTA4

■ Space requirement

Provide sufficient installation space for product safety.

⚠ CAUTION

Keep the space shown in the installation examples.
If the installation is not performed accordingly, it could cause a short circuit and result in a lack of operating performance.

● Single outdoor unit installation

- **When the upper space is open:**

Unit: mm

Obstacles at rear only

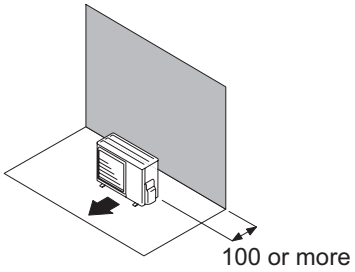

Obstacles at rear and sides

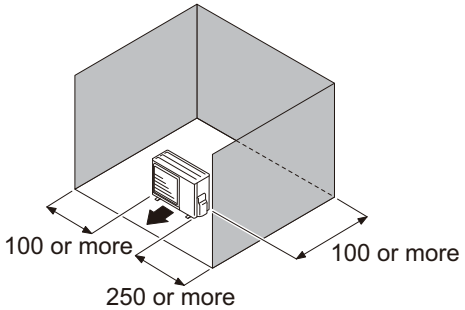

Obstacles at front

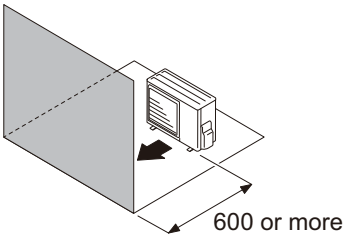

Obstacles at front and rear

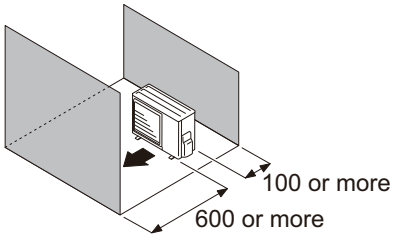

- **When an obstruction in the upper space:**

Unit: mm

Obstacles at rear and above

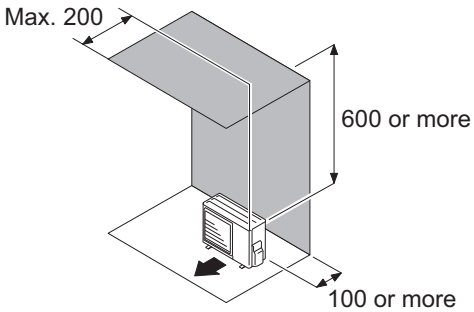

Obstacles at rear, sides, and above

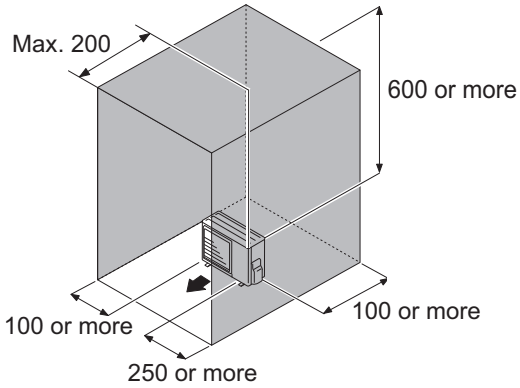

● Multiple outdoor unit installation

- Provide at least 250 mm of space between the outdoor units if multiple units are installed.
- When routing the piping from the side of an outdoor unit, provide space for piping.
- No more than 3 units must be installed side by side.
  When 4 units or more are arranged in a line, provide the space as shown in the following example "**When an obstruction in the upper space:**".

- **When the upper space is open:**

Unit: mm

Obstacles at rear only

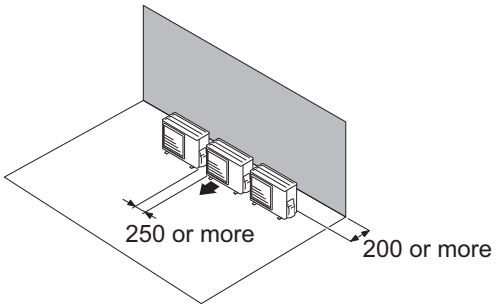

Obstacles at front only

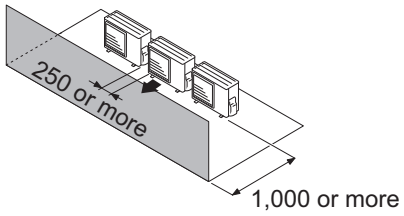

Obstacles at front and rear

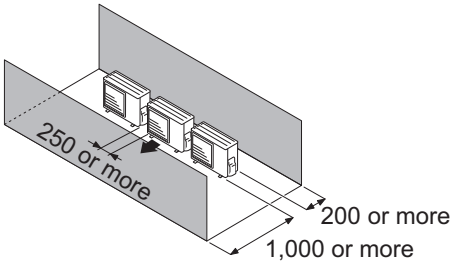

- **When an obstruction in the upper space:**

Unit: mm

Obstacles at rear and above.

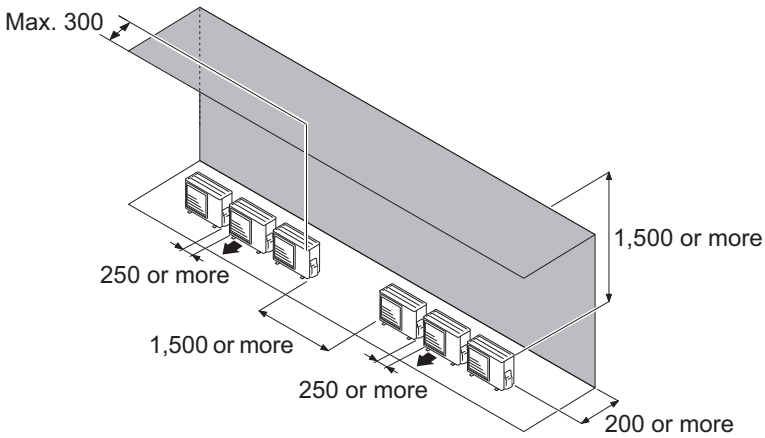

● Outdoor units installation in multi-row

Unit: mm

Single parallel unit arrangement

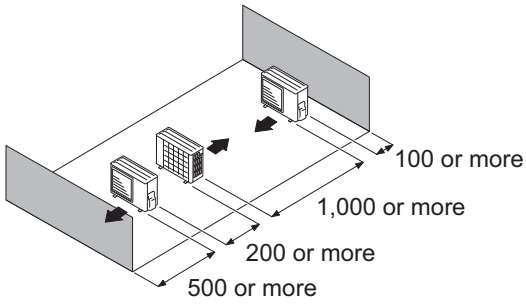

Multiple parallel unit arrangement

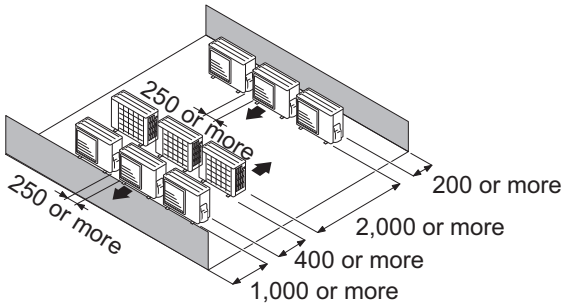

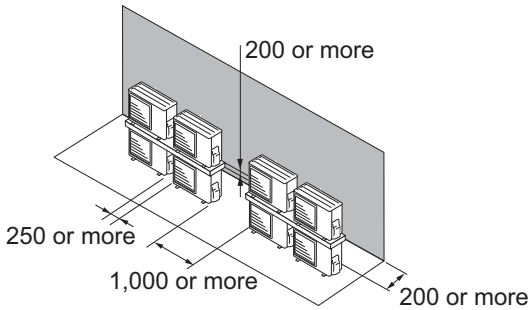

NOTES:

- If the space is larger than stated above, the condition will be the same as when there is no obstacle.
- When installing the outdoor unit, be sure to open the front and left side to obtain better operation efficiency.

⚠ CAUTION

- Do not install the outdoor unit in two-stage where the drain water could freeze. Otherwise the drainage from the upper unit may form ice and cause a malfunction of the lower unit.
- When the outdoor temperature is 0 °C or less, do not use the accessory drain pipe and drain cap. If the drain pipe and drain cap are used, the drain water in the pipe may freeze in extremely cold climate. (For reverse cycle model only.)
- In area with heavy snowfall, if the inlet and outlet of the outdoor unit is blocked with snow, it might become difficult to get warm, and it is likely to cause product malfunction. Construct a canopy and a pedestal, or place the unit on a high stand that is locally installed.

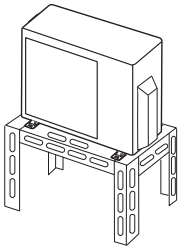

4. Refrigerant circuit

4-1. Model: AOEG30KBTA4

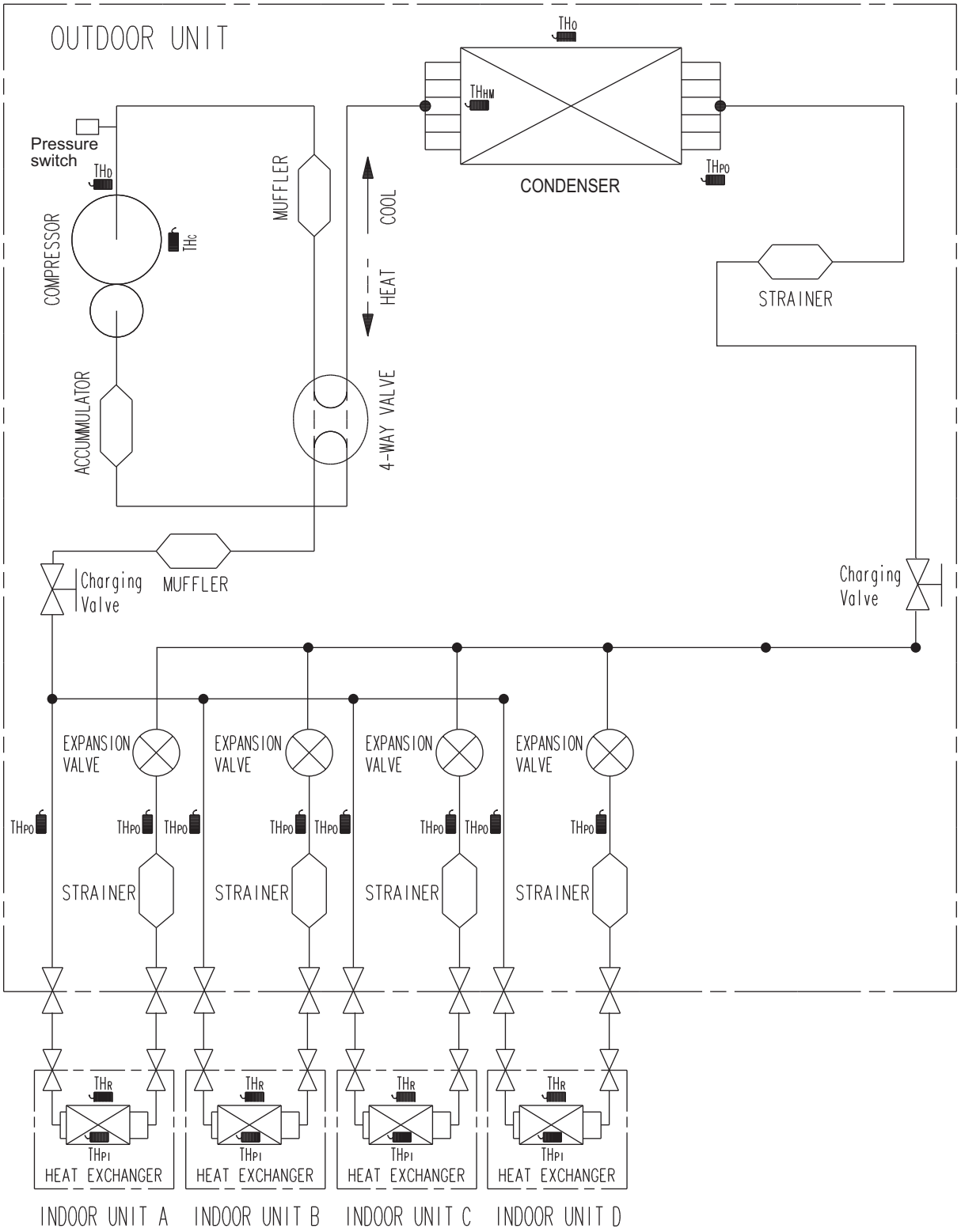

THD : THERMISTOR(DISCHARGE TEMP.)
THO : THERMISTOR(OUTDOOR TEMP.)
THPO : THERMISTOR(PIPE TEMP.)
THC : THERMISTOR(COMPRESSOR TEMP.)
THR : THERMISTOR(ROOM TEMP.)
THPI : THERMISTOR(PIPE TEMP.)
THHM : THERMISTOR(HEAT EXCHANGER MIDDLE TEMP.)

5. Wiring diagram

5-1. Model: AOEG30KBTA4

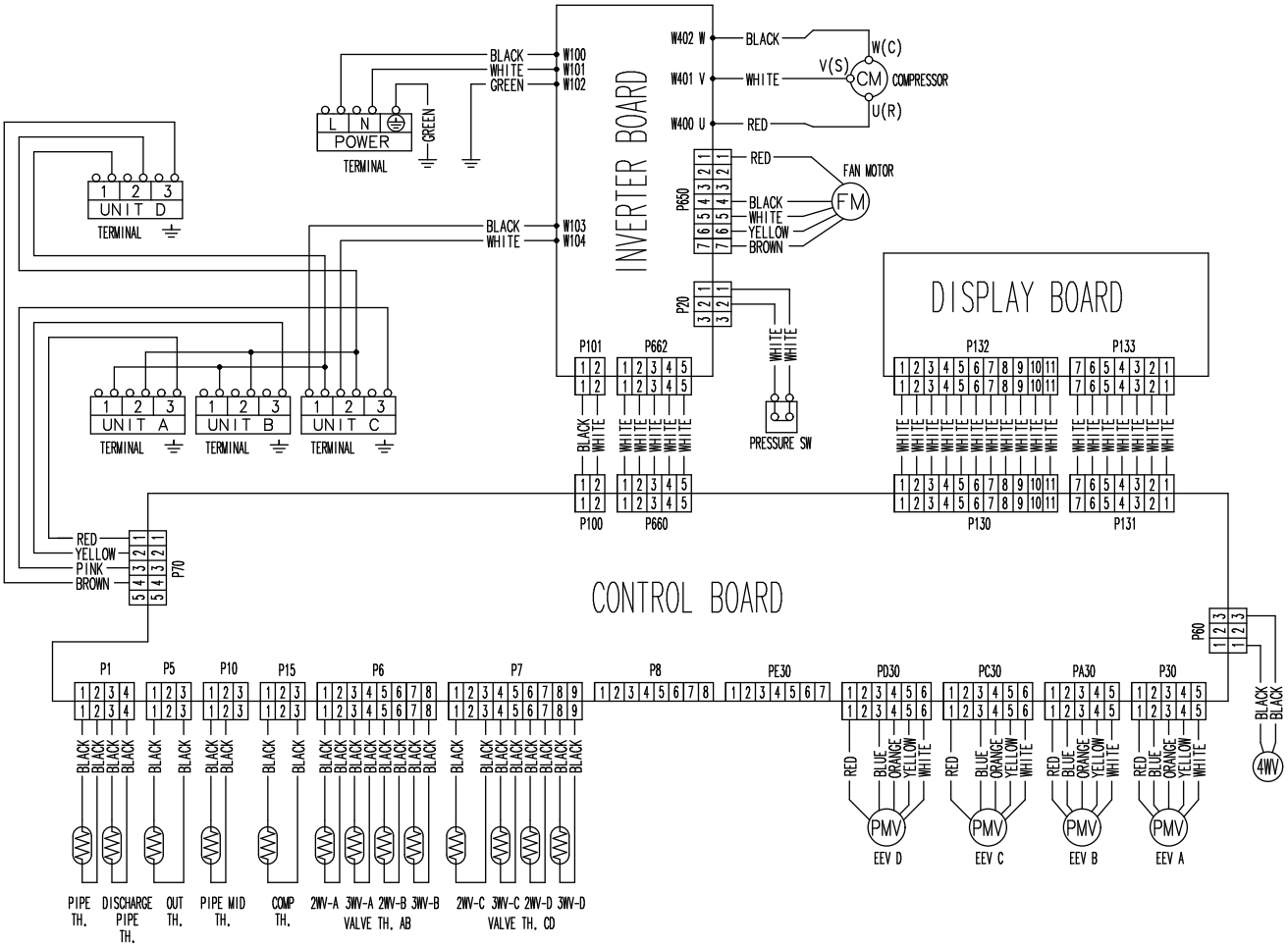

6. Capacity table

6-1. Combinations

■ Model: AOEG30KBTA4

● Cooling

Indoor unit combination (Wall-mounted KG/KM type only)

Combination of indoor unit					Rated capacity for each indoor unit (kW)				Total capacity (kW)			Input power (kW)			EER (W/W)	Seasonal data		
Room				Total	Room				Min.	Rated	Max.	Min.	Rated	Max.		Pdesign (kW)	SEER (kWh/kWh)	Energy efficiency class
1	2	3	4		1	2	3	4										
7	22	—	—	29	2.00	6.00	—	—	2.4	8.00	10.10	0.45	2.67	3.25	3.00	8.0	7.5	A++
7	24	—	—	31	1.81	6.19	—	—	2.4	8.00	10.10	0.45	2.67	3.25	3.00	8.0	7.5	A++
9	22	—	—	31	2.32	5.68	—	—	2.4	8.00	10.10	0.45	2.67	3.25	3.00	8.0	7.5	A++
9	24	—	—	33	2.18	5.82	—	—	2.4	8.00	10.10	0.45	2.67	3.25	3.00	8.0	7.5	A++
12	18	—	—	30	3.20	4.80	—	—	2.4	8.00	10.10	0.45	2.67	3.25	3.00	8.0	7.5	A++
12	22	—	—	34	2.82	5.18	—	—	2.4	8.00	10.10	0.45	2.67	3.25	3.00	8.0	7.5	A++
12	24	—	—	36	2.67	5.33	—	—	2.4	8.00	10.10	0.45	2.67	3.25	3.00	8.0	7.5	A++
14	18	—	—	32	3.50	4.50	—	—	2.4	8.00	10.10	0.45	2.67	3.25	3.00	8.0	7.5	A++
14	22	—	—	36	3.11	4.89	—	—	2.4	8.00	10.10	0.45	2.67	3.25	3.00	8.0	7.5	A++
14	24	—	—	38	2.95	5.05	—	—	2.4	8.00	10.10	0.45	2.67	3.25	3.00	8.0	7.5	A++
18	18	—	—	36	4.00	4.00	—	—	2.4	8.00	10.10	0.45	2.67	3.25	3.00	8.0	7.5	A++
18	22	—	—	40	3.60	4.40	—	—	2.4	8.00	10.10	0.45	2.67	3.25	3.00	8.0	7.5	A++
18	24	—	—	42	3.43	4.57	—	—	2.4	8.00	10.10	0.45	2.67	3.25	3.00	8.0	7.5	A++
22	22	—	—	44	4.00	4.00	—	—	2.4	8.00	10.10	0.45	2.67	3.25	3.00	8.0	7.5	A++
22	24	—	—	46	3.83	4.17	—	—	2.4	8.00	10.10	0.45	2.67	3.25	3.00	8.0	7.5	A++
24	24	—	—	48	4.00	4.00	—	—	2.4	8.00	10.10	0.45	2.67	3.25	3.00	8.0	7.5	A++
7	7	12	—	26	2.00	2.00	3.50	—	2.4	7.50	9.30	0.45	2.10	2.84	3.57	7.5	8.1	A++
7	7	14	—	28	2.00	2.00	4.00	—	2.4	8.00	10.10	0.45	2.32	3.25	3.45	8.0	8.0	A++
7	7	18	—	32	1.75	1.75	4.50	—	2.4	8.00	10.10	0.45	2.32	3.25	3.45	8.0	8.0	A++
7	7	22	—	36	1.56	1.56	4.88	—	2.4	8.00	10.10	0.45	2.32	3.25	3.45	8.0	8.0	A++
7	7	24	—	38	1.47	1.47	5.06	—	2.4	8.00	10.10	0.45	2.32	3.25	3.45	8.0	8.0	A++
7	9	9	—	25	2.00	2.50	2.50	—	2.4	7.00	8.90	0.45	1.90	2.65	3.69	7.0	8.2	A++
7	9	12	—	28	2.00	2.50	3.50	—	2.4	8.00	10.10	0.45	2.32	3.25	3.45	8.0	8.0	A++
7	9	14	—	30	1.87	2.40	3.73	—	2.4	8.00	10.10	0.45	2.32	3.25	3.45	8.0	8.0	A++
7	9	18	—	34	1.64	2.12	4.24	—	2.4	8.00	10.10	0.45	2.32	3.25	3.45	8.0	8.0	A++
7	9	22	—	38	1.47	1.89	4.64	—	2.4	8.00	10.10	0.45	2.32	3.25	3.45	8.0	8.0	A++
7	9	24	—	40	1.40	1.80	4.80	—	2.4	8.00	10.10	0.45	2.32	3.25	3.45	8.0	8.0	A++
7	12	12	—	31	1.81	3.10	3.10	—	2.4	8.00	10.10	0.45	2.32	3.25	3.45	8.0	8.0	A++
7	12	14	—	33	1.70	2.91	3.39	—	2.4	8.00	10.10	0.45	2.32	3.25	3.45	8.0	8.0	A++
7	12	18	—	37	1.51	2.59	3.90	—	2.4	8.00	10.10	0.45	2.32	3.25	3.45	8.0	8.0	A++
7	12	22	—	41	1.37	2.34	4.29	—	2.4	8.00	10.10	0.45	2.32	3.25	3.45	8.0	8.0	A++
7	12	24	—	43	1.30	2.23	4.47	—	2.4	8.00	10.10	0.45	2.32	3.25	3.45	8.0	8.0	A++
7	14	14	—	35	1.60	3.20	3.20	—	2.4	8.00	10.10	0.45	2.32	3.25	3.45	8.0	8.0	A++
7	14	18	—	39	1.44	2.87	3.69	—	2.4	8.00	10.10	0.45	2.32	3.25	3.45	8.0	8.0	A++
7	14	22	—	43	1.30	2.60	4.10	—	2.4	8.00	10.10	0.45	2.32	3.25	3.45	8.0	8.0	A++
7	14	24	—	45	1.24	2.49	4.27	—	2.4	8.00	10.10	0.45	2.32	3.25	3.45	8.0	8.0	A++
7	18	18	—	43	1.30	3.35	3.35	—	2.4	8.00	10.10	0.45	2.32	3.25	3.45	8.0	8.0	A++
7	18	22	—	47	1.19	3.06	3.75	—	2.4	8.00	10.10	0.45	2.32	3.25	3.45	8.0	8.0	A++
7	18	24	—	49	1.14	2.94	3.92	—	2.4	8.00	10.10	0.45	2.32	3.25	3.45	8.0	8.0	A++
9	9	9	—	27	2.50	2.50	2.50	—	2.4	7.50	9.60	0.45	2.10	3.01	3.57	7.5	8.1	A++
9	9	12	—	30	2.40	2.40	3.20	—	2.4	8.00	10.10	0.45	2.32	3.25	3.45	8.0	8.0	A++
9	9	14	—	32	2.25	2.25	3.50	—	2.4	8.00	10.10	0.45	2.32	3.25	3.45	8.0	8.0	A++
9	9	18	—	36	2.00	2.00	4.00	—	2.4	8.00	10.10	0.45	2.32	3.25	3.45	8.0	8.0	A++
9	9	22	—	40	1.80	1.80	4.40	—	2.4	8.00	10.10	0.45	2.32	3.25	3.45	8.0	8.0	A++
9	9	24	—	42	1.71	1.71	4.58	—	2.4	8.00	10.10	0.45	2.32	3.25	3.45	8.0	8.0	A++
9	12	12	—	33	2.18	2.91	2.91	—	2.4	8.00	10.10	0.45	2.32	3.25	3.45	8.0	8.0	A++
9	12	14	—	35	2.06	2.74	3.20	—	2.4	8.00	10.10	0.45	2.32	3.25	3.45	8.0	8.0	A++
9	12	18	—	39	1.85	2.46	3.69	—	2.4	8.00	10.10	0.45	2.32	3.25	3.45	8.0	8.0	A++
9	12	22	—	43	1.67	2.23	4.10	—	2.4	8.00	10.10	0.45	2.32	3.25	3.45	8.0	8.0	A++
9	12	24	—	45	1.60	2.13	4.27	—	2.4	8.00	10.10	0.45	2.32	3.25	3.45	8.0	8.0	A++
9	14	14	—	37	1.94	3.03	3.03	—	2.4	8.00	10.10	0.45	2.32	3.25	3.45	8.0	8.0	A++
9	14	18	—	41	1.76	2.73	3.51	—	2.4	8.00	10.10	0.45	2.32	3.25	3.45	8.0	8.0	A++
9	14	22	—	45	1.60	2.49	3.91	—	2.4	8.00	10.10	0.45	2.32	3.25	3.45	8.0	8.0	A++
9	14	24	—	47	1.53	2.38	4.09	—	2.4	8.00	10.10	0.45	2.32	3.25	3.45	8.0	8.0	A++
9	18	18	—	45	1.60	3.20	3.20	—	2.4	8.00	10.10	0.45	2.32	3.25	3.45	8.0	8.0	A++
12	12	12	—	36	2.67	2.67	2.67	—	2.4	8.00	10.10	0.45	2.32	3.25	3.45	8.0	8.0	A++
12	12	14	—	38	2.53	2.53	2.94	—	2.4	8.00	10.10	0.45	2.32	3.25	3.45	8.0	8.0	A++
12	12	18	—	42	2.29	2.29	3.42	—	2.4	8.00	10.10	0.45	2.32	3.25	3.45	8.0	8.0	A++
12	12	22	—	46	2.09	2.09	3.82	—	2.4	8.00	10.10	0.45	2.32	3.25	3.45	8.0	8.0	A++
12	12	24	—	48	2.00	2.00	4.00	—	2.4	8.00	10.10	0.45	2.32	3.25	3.45	8.0	8.0	A++
12	14	14	—	40	2.40	2.80	2.80	—	2.4	8.00	10.10	0.45	2.32	3.25	3.45	8.0	8.0	A++
12	14	18	—	44	2.18	2.55	3.27	—	2.4	8.00	10.10	0.45	2.32	3.25	3.45	8.0	8.0	A++
12	18	18	—	48	2.00	3.00	3.00	—	2.4	8.00	10.10	0.45	2.32	3.25	3.45	8.0	8.0	A++
14	14	14	—	42	2.67	2.67	2.67	—	2.4	8.00	10.10	0.45	2.32	3.25	3.45	8.0	8.0	A++
14	14	18	—	46	2.43	2.43	3.14	—	2.4	8.00	10.10	0.45	2.32	3.25	3.45	8.0	8.0	A++
7	7	7	7	28	2.00	2.00	2.00	2.00	2.4	8.00	10.10	0.45	2.05	3.25	3.90	8.0	8.5	A+++
7	7	7	9	30	1.87	1.87	1.87	2.39	2.4	8.00	10.10	0.45	2.05	3.25	3.90	8.0	8.5	A+++
7	7	7	12	33	1.70	1.70	1.70	2.90	2.4	8.00	10.10	0.45	2.05	3.25	3.90	8.0	8.5	A+++
7	7	7	14	35	1.60	1.60	1.60	3.20	2.4	8.00	10.10	0.45	2.05	3.25	3.90	8.0	8.5	A+++
7	7	7	18	39	1.44	1.44	1.44	3.68	2.4	8.00	10.10	0.45	2.05	3.25	3.90	8.0	8.5	A+++
7	7	9	9	32	1.75	1.75	2.25	2.25	2.4	8.00	10.10	0.45	2.05	3.25	3.90	8.0	8.5	A+++

Combination of indoor unit					Rated capacity for each indoor unit (kW)				Total capacity (kW)			Input power (kW)			EER (W/W)	Seasonal data		
Room				Total	Room				Min.	Rated	Max.	Min.	Rated	Max.		Pdesign (kW)	SEER (kWh/kWh)	Energy efficiency class
1	2	3	4		1	2	3	4										
7	7	9	12	35	1.60	1.60	2.06	2.74	2.4	8.00	10.10	0.45	2.05	3.25	3.90	8.0	8.5	A+++
7	7	9	14	37	1.51	1.51	1.95	3.03	2.4	8.00	10.10	0.45	2.05	3.25	3.90	8.0	8.5	A+++
7	7	9	18	41	1.37	1.37	1.76	3.50	2.4	8.00	10.10	0.45	2.05	3.25	3.90	8.0	8.5	A+++
7	7	12	12	38	1.47	1.47	2.53	2.53	2.4	8.00	10.10	0.45	2.05	3.25	3.90	8.0	8.5	A+++
7	7	12	14	40	1.40	1.40	2.40	2.80	2.4	8.00	10.10	0.45	2.05	3.25	3.90	8.0	8.5	A+++
7	7	12	18	44	1.27	1.27	2.18	3.28	2.4	8.00	10.10	0.45	2.05	3.25	3.90	8.0	8.5	A+++
7	7	14	14	42	1.33	1.33	2.67	2.67	2.4	8.00	10.10	0.45	2.05	3.25	3.90	8.0	8.5	A+++
7	7	14	18	46	1.22	1.22	2.43	3.13	2.4	8.00	10.10	0.45	2.05	3.25	3.90	8.0	8.5	A+++
7	9	9	9	34	1.64	2.12	2.12	2.12	2.4	8.00	10.10	0.45	2.05	3.25	3.90	8.0	8.5	A+++
7	9	9	12	37	1.51	1.95	1.95	2.59	2.4	8.00	10.10	0.45	2.05	3.25	3.90	8.0	8.5	A+++
7	9	9	14	39	1.43	1.85	1.85	2.87	2.4	8.00	10.10	0.45	2.05	3.25	3.90	8.0	8.5	A+++
7	9	9	18	43	1.30	1.67	1.67	3.36	2.4	8.00	10.10	0.45	2.05	3.25	3.90	8.0	8.5	A+++
7	9	12	12	40	1.40	1.80	2.40	2.40	2.4	8.00	10.10	0.45	2.05	3.25	3.90	8.0	8.5	A+++
7	9	12	14	42	1.33	1.71	2.29	2.67	2.4	8.00	10.10	0.45	2.05	3.25	3.90	8.0	8.5	A+++
7	9	12	18	46	1.22	1.57	2.09	3.13	2.4	8.00	10.10	0.45	2.05	3.25	3.90	8.0	8.5	A+++
7	9	14	14	44	1.26	1.64	2.55	2.55	2.4	8.00	10.10	0.45	2.05	3.25	3.90	8.0	8.5	A+++
7	9	14	18	48	1.17	1.50	2.33	3.00	2.4	8.00	10.10	0.45	2.05	3.25	3.90	8.0	8.5	A+++
7	12	12	12	43	1.31	2.23	2.23	2.23	2.4	8.00	10.10	0.45	2.05	3.25	3.90	8.0	8.5	A+++
7	12	12	14	45	1.24	2.13	2.13	2.50	2.4	8.00	10.10	0.45	2.05	3.25	3.90	8.0	8.5	A+++
7	12	12	18	49	1.14	1.96	1.96	2.94	2.4	8.00	10.10	0.45	2.05	3.25	3.90	8.0	8.5	A+++
7	12	14	14	47	1.19	2.05	2.38	2.38	2.4	8.00	10.10	0.45	2.05	3.25	3.90	8.0	8.5	A+++
9	9	9	9	36	2.00	2.00	2.00	2.00	2.4	8.00	10.10	0.45	2.05	3.25	3.90	8.0	8.5	A+++
9	9	9	12	39	1.85	1.85	1.85	2.45	2.4	8.00	10.10	0.45	2.05	3.25	3.90	8.0	8.5	A+++
9	9	9	14	41	1.76	1.76	1.76	2.72	2.4	8.00	10.10	0.45	2.05	3.25	3.90	8.0	8.5	A+++
9	9	9	18	45	1.60	1.60	1.60	3.20	2.4	8.00	10.10	0.45	2.05	3.25	3.90	8.0	8.5	A+++
9	9	12	12	42	1.71	1.71	2.29	2.29	2.4	8.00	10.10	0.45	2.05	3.25	3.90	8.0	8.5	A+++
9	9	12	14	44	1.64	1.64	2.18	2.54	2.4	8.00	10.10	0.45	2.05	3.25	3.90	8.0	8.5	A+++
9	9	12	18	48	1.50	1.50	2.00	3.00	2.4	8.00	10.10	0.45	2.05	3.25	3.90	8.0	8.5	A+++
9	9	14	14	46	1.57	1.57	2.43	2.43	2.4	8.00	10.10	0.45	2.05	3.25	3.90	8.0	8.5	A+++
9	12	12	12	45	1.61	2.13	2.13	2.13	2.4	8.00	10.10	0.45	2.05	3.25	3.90	8.0	8.5	A+++
9	12	12	14	47	1.53	2.04	2.04	2.39	2.4	8.00	10.10	0.45	2.05	3.25	3.90	8.0	8.5	A+++
9	12	14	14	49	1.46	1.96	2.29	2.29	2.4	8.00	10.10	0.45	2.05	3.25	3.90	8.0	8.5	A+++
12	12	12	12	48	2.00	2.00	2.00	2.00	2.4	8.00	10.10	0.45	2.05	3.25	3.90	8.0	8.5	A+++

Indoor unit combination (All models other than wall-mounted type KG/KM models)

Combination of indoor unit					Rated capacity for each indoor unit (kW)				Total capacity (kW)			Input power (kW)			EER (W/W)	Seasonal data		
Room				Total	Room				Min.	Rated	Max.	Min.	Rated	Max.		Pdesign (kW)	SEER (kWh/kWh)	Energy efficiency class
1	2	3	4		1	2	3	4										
5	22	—	—	27	1.50	6.00	—	—	2.4	7.50	9.4	0.45	2.50	3.00	3.00	7.5	6	A+
5	24	—	—	29	1.38	6.62	—	—	2.4	8.00	9.5	0.45	2.72	3.30	2.94	8.0	5.9	A+
7	22	—	—	29	2.00	6.00	—	—	2.4	8.00	10.1	0.45	2.72	3.30	2.94	8.0	5.9	A+
7	24	—	—	31	1.81	6.19	—	—	2.4	8.00	10.1	0.45	2.72	3.30	2.94	8.0	5.9	A+
9	22	—	—	31	2.32	5.68	—	—	2.4	8.00	10.1	0.45	2.72	3.30	2.94	8.0	5.9	A+
9	24	—	—	33	2.18	5.82	—	—	2.4	8.00	10.1	0.45	2.72	3.30	2.94	8.0	5.9	A+
12	18	—	—	30	3.20	4.80	—	—	2.4	8.00	10.1	0.45	2.72	3.30	2.94	8.0	5.9	A+
12	22	—	—	34	2.82	5.18	—	—	2.4	8.00	10.1	0.45	2.72	3.30	2.94	8.0	5.9	A+
12	24	—	—	36	2.67	5.33	—	—	2.4	8.00	10.1	0.45	2.72	3.30	2.94	8.0	5.9	A+
14	18	—	—	32	3.50	4.50	—	—	2.4	8.00	10.1	0.45	2.72	3.30	2.94	8.0	5.9	A+
14	22	—	—	36	3.11	4.89	—	—	2.4	8.00	10.1	0.45	2.72	3.30	2.94	8.0	5.9	A+
14	24	—	—	38	2.95	5.05	—	—	2.4	8.00	10.1	0.45	2.72	3.30	2.94	8.0	5.9	A+
18	18	—	—	36	4.00	4.00	—	—	2.4	8.00	10.1	0.45	2.72	3.30	2.94	8.0	5.9	A+
18	22	—	—	40	3.60	4.40	—	—	2.4	8.00	10.1	0.45	2.72	3.30	2.94	8.0	5.9	A+
18	24	—	—	42	3.43	4.57	—	—	2.4	8.00	10.1	0.45	2.72	3.30	2.94	8.0	5.9	A+
22	22	—	—	44	4.00	4.00	—	—	2.4	8.00	10.1	0.45	2.72	3.30	2.94	8.0	5.9	A+
22	24	—	—	46	3.83	4.17	—	—	2.4	8.00	10.1	0.45	2.72	3.30	2.94	8.0	5.9	A+
24	24	—	—	48	4.00	4.00	—	—	2.4	8.00	10.1	0.45	2.72	3.30	2.94	8.0	5.9	A+
5	5	18	—	28	1.50	1.50	5.00	—	2.4	8.00	9.6	0.45	2.37	3.30	3.37	8.0	6.3	A++
5	5	22	—	32	1.25	1.25	5.50	—	2.4	8.00	10.1	0.45	2.37	3.30	3.37	8.0	6.3	A++
5	5	24	—	34	1.18	1.18	5.65	—	2.4	8.00	10.1	0.45	2.37	3.30	3.37	8.0	6.3	A++
5	7	18	—	30	1.33	1.87	4.80	—	2.4	8.00	10.1	0.45	2.37	3.30	3.37	8.0	6.3	A++
5	7	22	—	34	1.18	1.65	5.18	—	2.4	8.00	10.1	0.45	2.37	3.30	3.37	8.0	6.3	A++
5	7	24	—	36	1.11	1.56	5.33	—	2.4	8.00	10.1	0.45	2.37	3.30	3.37	8.0	6.3	A++
5	9	14	—	28	1.50	2.50	4.00	—	2.4	8.00	10.1	0.45	2.37	3.30	3.37	8.0	6.3	A++
5	9	18	—	32	1.25	2.25	4.50	—	2.4	8.00	10.1	0.45	2.37	3.30	3.37	8.0	6.3	A++
5	9	22	—	36	1.11	2.00	4.89	—	2.4	8.00	10.1	0.45	2.37	3.30	3.37	8.0	6.3	A++
5	9	24	—	38	1.05	1.89	5.05	—	2.4	8.00	10.1	0.45	2.37	3.30	3.37	8.0	6.3	A++
5	12	12	—	29	1.38	3.31	3.31	—	2.4	8.00	10.1	0.45	2.37	3.30	3.37	8.0	6.3	A++
5	12	14	—	31	1.29	3.10	3.61	—	2.4	8.00	10.1	0.45	2.37	3.30	3.37	8.0	6.3	A++
5	12	18	—	35	1.14	2.74	4.11	—	2.4	8.00	10.1	0.45	2.37	3.30	3.37	8.0	6.3	A++
5	12	22	—	39	1.03	2.46	4.51	—	2.4	8.00	10.1	0.45	2.37	3.30	3.37	8.0	6.3	A++
5	12	24	—	41	0.98	2.34	4.68	—	2.4	8.00	10.1	0.45	2.37	3.30	3.37	8.0	6.3	A++
5	14	14	—	33	1.21	3.39	3.39	—	2.4	8.00	10.1	0.45	2.37	3.30	3.37	8.0	6.3	A++
5	14	18	—	37	1.08	3.03	3.89	—	2.4	8.00	10.1	0.45	2.37	3.30	3.37	8.0	6.3	A++
5	14	22	—	41	0.98	2.73	4.29	—	2.4	8.00	10.1	0.45	2.37	3.30	3.37	8.0	6.3	A++
5	14	24	—	43	0.93	2.60	4.47	—	2.4	8.00	10.1	0.45	2.37	3.30	3.37	8.0	6.3	A++
5	18	18	—	41	0.98	3.51	3.51	—	2.4	8.00	10.1	0.45	2.37	3.30	3.37	8.0	6.3	A++
5	18	22	—	45	0.89	3.20	3.91	—	2.4	8.00	10.1	0.45	2.37	3.30	3.37	8.0	6.3	A++
5	18	24	—	47	0.85	3.06	4.09	—	2.4	8.00	10.1	0.45	2.37	3.30	3.37	8.0	6.3	A++
7	7	12	—	26	2.00	2.00	3.50	—	2.4	7.50	9.3	0.45	2.17	2.91	3.45	7.5	6.4	A++
7	7	14	—	28	2.00	2.00	4.00	—	2.4	8.00	10.1	0.45	2.37	3.30	3.37	8.0	6.3	A++
7	7	18	—	32	1.75	1.75	4.50	—	2.4	8.00	10.1	0.45	2.37	3.30	3.37	8.0	6.3	A++
7	7	22	—	36	1.56	1.56	4.89	—	2.4	8.00	10.1	0.45	2.37	3.30	3.37	8.0	6.3	A++
7	7	24	—	38	1.47	1.47	5.05	—	2.4	8.00	10.1	0.45	2.37	3.30	3.37	8.0	6.3	A++
7	9	9	—	25	2.00	2.50	2.50	—	2.4	7.00	8.9	0.45	2.04	2.79	3.43	7.0	6.5	A++
7	9	12	—	28	2.00	2.50	3.50	—	2.4	8.00	10.1	0.45	2.37	3.30	3.37	8.0	6.3	A++
7	9	14	—	30	1.87	2.40	3.73	—	2.4	8.00	10.1	0.45	2.37	3.30	3.37	8.0	6.3	A++

Combination of indoor unit					Rated capacity for each indoor unit (kW)				Total capacity (kW)			Input power (kW)			EER (W/W)	Seasonal data		
Room				Total	Room													
1	2	3	4		1	2	3	4	Min.	Rated	Max.	Min.	Rated	Max.		Pdesign (kW)	SEER (kWh/kWh)	Energy efficiency class
7	9	18	—	34	1.65	2.12	4.24	—	2.4	8.00	10.1	0.45	2.37	3.30	3.37	8.0	6.3	A++
7	9	22	—	38	1.47	1.89	4.63	—	2.4	8.00	10.1	0.45	2.37	3.30	3.37	8.0	6.3	A++
7	9	24	—	40	1.40	1.80	4.80	—	2.4	8.00	10.1	0.45	2.37	3.30	3.37	8.0	6.3	A++
7	12	12	—	31	1.81	3.10	3.10	—	2.4	8.00	10.1	0.45	2.37	3.30	3.37	8.0	6.3	A++
7	12	14	—	33	1.70	2.91	3.39	—	2.4	8.00	10.1	0.45	2.37	3.30	3.37	8.0	6.3	A++
7	12	18	—	37	1.51	2.59	3.89	—	2.4	8.00	10.1	0.45	2.37	3.30	3.37	8.0	6.3	A++
7	12	22	—	41	1.37	2.34	4.29	—	2.4	8.00	10.1	0.45	2.37	3.30	3.37	8.0	6.3	A++
7	12	24	—	43	1.30	2.23	4.47	—	2.4	8.00	10.1	0.45	2.37	3.30	3.37	8.0	6.3	A++
7	14	14	—	35	1.60	3.20	3.20	—	2.4	8.00	10.1	0.45	2.37	3.30	3.37	8.0	6.3	A++
7	14	18	—	39	1.44	2.87	3.69	—	2.4	8.00	10.1	0.45	2.37	3.30	3.37	8.0	6.3	A++
7	14	22	—	43	1.30	2.60	4.09	—	2.4	8.00	10.1	0.45	2.37	3.30	3.37	8.0	6.3	A++
7	14	24	—	45	1.24	2.49	4.27	—	2.4	8.00	10.1	0.45	2.37	3.30	3.37	8.0	6.3	A++
7	18	18	—	43	1.30	3.35	3.35	—	2.4	8.00	10.1	0.45	2.37	3.30	3.37	8.0	6.3	A++
7	18	22	—	47	1.19	3.06	3.74	—	2.4	8.00	10.1	0.45	2.37	3.30	3.37	8.0	6.3	A++
7	18	24	—	49	1.14	2.94	3.92	—	2.4	8.00	10.1	0.45	2.37	3.30	3.37	8.0	6.3	A++
9	9	9	—	27	2.50	2.50	2.50	—	2.4	7.50	9.6	0.45	2.17	3.00	3.45	7.5	6.4	A++
9	9	12	—	30	2.40	2.40	3.20	—	2.4	8.00	10.1	0.45	2.37	3.30	3.37	8.0	6.3	A++
9	9	14	—	32	2.25	2.25	3.50	—	2.4	8.00	10.1	0.45	2.37	3.30	3.37	8.0	6.3	A++
9	9	18	—	36	2.00	2.00	4.00	—	2.4	8.00	10.1	0.45	2.37	3.30	3.37	8.0	6.3	A++
9	9	22	—	40	1.80	1.80	4.40	—	2.4	8.00	10.1	0.45	2.37	3.30	3.37	8.0	6.3	A++
9	9	24	—	42	1.71	1.71	4.57	—	2.4	8.00	10.1	0.45	2.37	3.30	3.37	8.0	6.3	A++
9	12	12	—	33	2.18	2.91	2.91	—	2.4	8.00	10.1	0.45	2.37	3.30	3.37	8.0	6.3	A++
9	12	14	—	35	2.06	2.74	3.20	—	2.4	8.00	10.1	0.45	2.37	3.30	3.37	8.0	6.3	A++
9	12	18	—	39	1.85	2.46	3.69	—	2.4	8.00	10.1	0.45	2.37	3.30	3.37	8.0	6.3	A++
9	12	22	—	43	1.67	2.23	4.09	—	2.4	8.00	10.1	0.45	2.37	3.30	3.37	8.0	6.3	A++
9	12	24	—	45	1.60	2.13	4.27	—	2.4	8.00	10.1	0.45	2.37	3.30	3.37	8.0	6.3	A++
9	14	14	—	37	1.95	3.03	3.03	—	2.4	8.00	10.1	0.45	2.37	3.30	3.37	8.0	6.3	A++
9	14	18	—	41	1.76	2.73	3.51	—	2.4	8.00	10.1	0.45	2.37	3.30	3.37	8.0	6.3	A++
9	14	22	—	45	1.60	2.49	3.91	—	2.4	8.00	10.1	0.45	2.37	3.30	3.37	8.0	6.3	A++
9	14	24	—	47	1.53	2.38	4.09	—	2.4	8.00	10.1	0.45	2.37	3.30	3.37	8.0	6.3	A++
9	18	18	—	45	1.60	3.20	3.20		2.4	8.00	10.1	0.45	2.37	3.30	3.37	8.0	6.3	A++
12	12	12	—	36	2.67	2.67	2.67	—	2.4	8.00	10.1	0.45	2.37	3.30	3.37	8.0	6.3	A++
12	12	14	—	38	2.53	2.53	2.95	—	2.4	8.00	10.1	0.45	2.37	3.30	3.37	8.0	6.3	A++
12	12	18	—	42	2.29	2.29	3.43	—	2.4	8.00	10.1	0.45	2.37	3.30	3.37	8.0	6.3	A++
12	12	22	—	46	2.09	2.09	3.83	—	2.4	8.00	10.1	0.45	2.37	3.30	3.37	8.0	6.3	A++
12	12	24	—	48	2.00	2.00	4.00	—	2.4	8.00	10.1	0.45	2.37	3.30	3.37	8.0	6.3	A++
12	14	14	—	40	2.40	2.80	2.80	—	2.4	8.00	10.1	0.45	2.37	3.30	3.37	8.0	6.3	A++
12	14	18	—	44	2.18	2.55	3.27	—	2.4	8.00	10.1	0.45	2.37	3.30	3.37	8.0	6.3	A++
12	18	18	—	48	2.00	3.00	3.00	—	2.4	8.00	10.1	0.45	2.37	3.30	3.37	8.0	6.3	A++
14	14	14	—	42	2.67	2.67	2.67	—	2.4	8.00	10.1	0.45	2.37	3.30	3.37	8.0	6.3	A++
14	14	18	—	46	2.43	2.43	3.13	—	2.4	8.00	10.1	0.45	2.37	3.30	3.37	8.0	6.7	A++
5	5	5	12	27	1.39	1.39	1.39	3.33	2.4	7.50	9.3	0.45	1.99	3.00	3.76	8.0	6.7	A++
5	5	5	14	29	1.38	1.38	1.38	3.86	2.4	8.00	10.1	0.45	2.10	3.30	3.80	8.0	6.7	A++
5	5	5	18	33	1.21	1.21	1.21	4.36	2.4	8.00	10.1	0.45	2.10	3.30	3.80	8.0	6.7	A++
5	5	5	22	37	1.08	1.08	1.08	4.76	2.4	8.00	10.1	0.45	2.10	3.30	3.80	8.0	6.7	A++
5	5	5	24	39	1.03	1.03	1.03	4.92	2.4	8.00	10.1	0.45	2.10	3.30	3.80	8.0	6.7	A++
5	5	7	12	29	1.38	1.38	1.93	3.31	2.4	8.00	10.1	0.45	2.10	3.30	3.80	8.0	6.7	A++
5	5	7	14	31	1.29	1.29	1.81	3.61	2.4	8.00	10.1	0.45	2.10	3.30	3.80	8.0	6.7	A++
5	5	7	18	35	1.14	1.14	1.60	4.11	2.4	8.00	10.1	0.45	2.10	3.30	3.80	8.0	6.7	A++
5	5	7	22	39	1.03	1.03	1.44	4.51	2.4	8.00	10.1	0.45	2.10	3.30	3.80	8.0	6.7	A++
5	5	7	24	41	0.98	0.98	1.37	4.68	2.4	8.00	10.1	0.45	2.10	3.30	3.80	8.0	6.7	A++
5	5	9	9	28	1.50	1.50	2.50	2.50	2.4	8.00	10.1	0.45	2.10	3.30	3.80	8.0	6.7	A++
5	5	9	12	31	1.29	1.29	2.32	3.10	2.4	8.00	10.1	0.45	2.10	3.30	3.80	8.0	6.7	A++
5	5	9	14	33	1.21	1.21	2.18	3.39	2.4	8.00	10.1	0.45	2.10	3.30	3.80	8.0	6.7	A++
5	5	9	18	37	1.08	1.08	1.95	3.89	2.4	8.00	10.1	0.45	2.10	3.30	3.80	8.0	6.7	A++
5	5	9	24	43	0.93	0.93	1.67	4.47	2.4	8.00	10.1	0.45	2.10	3.30	3.80	8.0	6.7	A++
5	5	12	12	34	1.18	1.18	2.82	2.82	2.4	8.00	10.1	0.45	2.10	3.30	3.80	8.0	6.7	A++
5	5	12	14	36	1.11	1.11	2.67	3.11	2.4	8.00	10.1	0.45	2.10	3.30	3.80	8.0	6.7	A++
5	5	12	18	40	1.00	1.00	2.40	3.60	2.4	8.00	10.1	0.45	2.10	3.30	3.80	8.0	6.7	A++
5	5	12	24	46	0.87	0.87	2.09	4.17	2.4	8.00	10.1	0.45	2.10	3.30	3.80	8.0	6.7	A++
5	5	14	14	38	1.05	1.05	2.95	2.95	2.4	8.00	10.1	0.45	2.10	3.30	3.80	8.0	6.7	A++
5	5	14	18	42	0.95	0.95	2.67	3.43	2.4	8.00	10.1	0.45	2.10	3.30	3.80	8.0	6.7	A++
5	5	18	18	46	0.87	0.87	3.13	3.13	2.4	8.00	10.1	0.45	2.10	3.30	3.80	8.0	6.7	A++
5	7	7	9	28	1.50	2.00	2.00	2.50	2.4	8.00	10.1	0.45	2.10	3.30	3.80	8.0	6.7	A++
5	7	7	12	31	1.29	1.81	1.81	3.10	2.4	8.00	10.1	0.45	2.10	3.30	3.80	8.0	6.7	A++
5	7	7	14	33	1.21	1.70	1.70	3.39	2.4	8.00	10.1	0.45	2.10	3.30	3.80	8.0	6.7	A++
5	7	7	18	37	1.08	1.51	1.51	3.89	2.4	8.00	10.1	0.45	2.10	3.30	3.80	8.0	6.7	A++
5	7	7	22	41	0.98	1.37	1.37	4.29	2.4	8.00	10.1	0.45	2.10	3.30	3.80	8.0	6.7	A++
5	7	7	24	43	0.93	1.30	1.30	4.47	2.4	8.00	10.1	0.45	2.10	3.30	3.80	8.0	6.7	A++
5	7	9	9	30	1.33	1.87	2.40	2.40	2.4	8.00	10.1	0.45	2.10	3.30	3.80	8.0	6.7	A++
5	7	9	12	33	1.21	1.70	2.18	2.91	2.4	8.00	10.1	0.45	2.10	3.30	3.80	8.0	6.7	A++
5	7	9	14	35	1.14	1.60	2.06	3.20	2.4	8.00	10.1	0.45	2.10	3.30	3.80	8.0	6.7	A++
5	7	9	18	39	1.03	1.44	1.85	3.69	2.4	8.00	10.1	0.45	2.10	3.30	3.80	8.0	6.7	A++
5	7	9	24	45	0.89	1.24	1.60	4.27	2.4	8.00	10.1	0.45	2.10	3.30	3.80	8.0	6.7	A++
5	7	12	12	36	1.11	1.56	2.67	2.67	2.4	8.00	10.1	0.45	2.10	3.30	3.80	8.0	6.7	A++
5	7	12	14	38	1.05	1.47	2.53	2.95	2.4	8.00	10.1	0.45	2.10	3.30	3.80	8.0	6.7	A++
5	7	12	18	42	0.95	1.33	2.29	3.43	2.4	8.00	10.1	0.45	2.10	3.30	3.80	8.0	6.7	A++
5	7	12	24	48	0.83	1.17	2.00	4.00	2.4	8.00	10.1	0.45	2.10	3.30	3.80	8.0	6.7	A++
5	7	14	14	40	1.00	1.40	2.80	2.80	2.4	8.00	10.1	0.45	2.10	3.30	3.80	8.0	6.7	A++
5	7	14	18	44	0.91	1.27	2.55	3.27	2.4	8.00	10.1	0.45	2.10	3.30	3.80	8.0	6.7	A++
5	7	18	18	48	0.83	1.17	3.00	3.00	2.4	8.00	10.1	0.45	2.10	3.30	3.80	8.0	6.7	A++
5	9	9	9	32	1.25	2.25	2.25	2.25	2.4	8.00	10.1	0.45	2.10	3.30	3.80	8.0	6.7	A++
5	9	9	12	35	1.14	2.06	2.06	2.74	2.4	8.00	10.1	0.45	2.10	3.30	3.80	8.0	6.7	A++
5	9	9	14	37	1.08	1.95	1.95	3.03	2.4	8.00	10.1	0.45	2.10	3.30	3.80	8.0	6.7	A++
5	9	9	18	41	0.98	1.76	1.76	3.51	2.4	8.00	10.1	0.45	2.10	3.30	3.80	8.0	6.7	A++
5	9	12	12	38	1.05	1.89	2.53	2.53	2.4	8.00	10.1	0.45	2.10	3.30	3.80	8.0	6.7	A++
5	9	12	14	40	1.00	1.80	2.40	2.80	2.4	8.00	10.1	0.45	2.10	3.30	3.80	8.0	6.7	A++
5	9	12	18	44	0.91	1.64	2.18	3.27	2.4	8.00	10.1	0.45	2.10	3.30	3.80	8.0	6.7	A++
5	9	14	14	42	0.95	1.71	2.67	2.67	2.4	8.00	10.1	0.45	2.10	3.30	3.80	8.0	6.7	A++

OUTDOOR UNIT AOEG30KBTA4

Combination of indoor unit					Rated capacity for each indoor unit (kW)				Total capacity (kW)			Input power (kW)			EER (W/W)	Seasonal data		
Room				Total	Room				Min.	Rated	Max.	Min.	Rated	Max.		Pdesign (kW)	SEER (kWh/kWh)	Energy efficiency class
1	2	3	4		1	2	3	4										
5	9	14	18	46	0.87	1.57	2.43	3.13	2.4	8.00	10.1	0.45	2.10	3.30	3.80	8.0	6.7	A++
5	12	12	12	41	0.98	2.34	2.34	2.34	2.4	8.00	10.1	0.45	2.10	3.30	3.80	8.0	6.7	A++
5	12	12	14	43	0.93	2.23	2.23	2.60	2.4	8.00	10.1	0.45	2.10	3.30	3.80	8.0	6.7	A++
5	12	12	18	47	0.85	2.04	2.04	3.06	2.4	8.00	10.1	0.45	2.10	3.30	3.80	8.0	6.7	A++
5	12	14	14	45	0.89	2.13	2.49	2.49	2.4	8.00	10.1	0.45	2.10	3.30	3.80	8.0	6.7	A++
5	12	14	18	49	0.82	1.96	2.29	2.94	2.4	8.00	10.1	0.45	2.10	3.30	3.80	8.0	6.7	A++
5	14	14	14	47	0.85	2.38	2.38	2.38	2.4	8.00	10.1	0.45	2.10	3.30	3.80	8.0	6.7	A++
7	7	7	7	28	2.00	2.00	2.00	2.00	2.4	8.00	10.1	0.45	2.10	3.30	3.81	8.0	6.7	A++
7	7	7	9	30	1.87	1.87	1.87	2.40	2.4	8.00	10.1	0.45	2.10	3.30	3.81	8.0	6.7	A++
7	7	7	12	33	1.70	1.70	1.70	2.91	2.4	8.00	10.1	0.45	2.10	3.30	3.81	8.0	6.7	A++
7	7	7	14	35	1.60	1.60	1.60	3.20	2.4	8.00	10.1	0.45	2.10	3.30	3.81	8.0	6.7	A++
7	7	7	18	39	1.44	1.44	1.44	3.69	2.4	8.00	10.1	0.45	2.10	3.30	3.81	8.0	6.7	A++
7	7	9	9	32	1.75	1.75	2.25	2.25	2.4	8.00	10.1	0.45	2.10	3.30	3.81	8.0	6.7	A++
7	7	9	12	35	1.60	1.60	2.06	2.74	2.4	8.00	10.1	0.45	2.10	3.30	3.81	8.0	6.7	A++
7	7	9	14	37	1.51	1.51	1.95	3.03	2.4	8.00	10.1	0.45	2.10	3.30	3.81	8.0	6.7	A++
7	7	9	18	41	1.37	1.37	1.76	3.51	2.4	8.00	10.1	0.45	2.10	3.30	3.81	8.0	6.7	A++
7	7	12	12	38	1.47	1.47	2.53	2.53	2.4	8.00	10.1	0.45	2.10	3.30	3.81	8.0	6.7	A++
7	7	12	14	40	1.40	1.40	2.40	2.80	2.4	8.00	10.1	0.45	2.10	3.30	3.81	8.0	6.7	A++
7	7	12	18	44	1.27	1.27	2.18	3.27	2.4	8.00	10.1	0.45	2.10	3.30	3.81	8.0	6.7	A++
7	7	14	14	42	1.33	1.33	2.67	2.67	2.4	8.00	10.1	0.45	2.10	3.30	3.81	8.0	6.7	A++
7	7	14	18	46	1.22	1.22	2.43	3.13	2.4	8.00	10.1	0.45	2.10	3.30	3.81	8.0	6.7	A++
7	9	9	9	34	1.65	2.12	2.12	2.12	2.4	8.00	10.1	0.45	2.10	3.30	3.81	8.0	6.7	A++
7	9	9	12	37	1.51	1.95	1.95	2.59	2.4	8.00	10.1	0.45	2.10	3.30	3.81	8.0	6.7	A++
7	9	9	14	39	1.44	1.85	1.85	2.87	2.4	8.00	10.1	0.45	2.10	3.30	3.81	8.0	6.7	A++
7	9	9	18	43	1.30	1.67	1.67	3.35	2.4	8.00	10.1	0.45	2.10	3.30	3.81	8.0	6.7	A++
7	9	12	12	40	1.40	1.80	2.40	2.40	2.4	8.00	10.1	0.45	2.10	3.30	3.81	8.0	6.7	A++
7	9	12	14	42	1.33	1.71	2.29	2.67	2.4	8.00	10.1	0.45	2.10	3.30	3.81	8.0	6.7	A++
7	9	12	18	46	1.22	1.57	2.09	3.13	2.4	8.00	10.1	0.45	2.10	3.30	3.81	8.0	6.7	A++
7	9	14	14	44	1.27	1.64	2.55	2.55	2.4	8.00	10.1	0.45	2.10	3.30	3.81	8.0	6.7	A++
7	9	14	18	48	1.17	1.50	2.33	3.00	2.4	8.00	10.1	0.45	2.10	3.30	3.81	8.0	6.7	A++
7	12	12	12	43	1.30	2.23	2.23	2.23	2.4	8.00	10.1	0.45	2.10	3.30	3.81	8.0	6.7	A++
7	12	12	14	45	1.24	2.13	2.13	2.49	2.4	8.00	10.1	0.45	2.10	3.30	3.81	8.0	6.7	A++
7	12	12	18	49	1.14	1.96	1.96	2.94	2.4	8.00	10.1	0.45	2.10	3.30	3.81	8.0	6.7	A++
7	12	14	14	47	1.19	2.04	2.38	2.38	2.4	8.00	10.1	0.45	2.10	3.30	3.81	8.0	6.7	A++
9	9	9	9	36	2.00	2.00	2.00	2.00	2.4	8.00	10.1	0.45	2.10	3.30	3.81	8.0	6.7	A++
9	9	9	12	39	1.85	1.85	1.85	2.46	2.4	8.00	10.1	0.45	2.10	3.30	3.81	8.0	6.7	A++
9	9	9	14	41	1.76	1.76	1.76	2.73	2.4	8.00	10.1	0.45	2.10	3.30	3.81	8.0	6.7	A++
9	9	9	18	45	1.60	1.60	1.60	3.20	2.4	8.00	10.1	0.45	2.10	3.30	3.81	8.0	6.7	A++
9	9	12	12	42	1.71	1.71	2.29	2.29	2.4	8.00	10.1	0.45	2.10	3.30	3.81	8.0	6.7	A++
9	9	12	14	44	1.64	1.64	2.18	2.55	2.4	8.00	10.1	0.45	2.10	3.30	3.81	8.0	6.7	A++
9	9	12	18	48	1.50	1.50	2.00	3.00	2.4	8.00	10.1	0.45	2.10	3.30	3.81	8.0	6.7	A++
9	9	14	14	46	1.57	1.57	2.43	2.43	2.4	8.00	10.1	0.45	2.10	3.30	3.81	8.0	6.7	A++
9	12	12	12	45	1.60	2.13	2.13	2.13	2.4	8.00	10.1	0.45	2.10	3.30	3.81	8.0	6.7	A++
9	12	12	14	47	1.53	2.04	2.04	2.38	2.4	8.00	10.1	0.45	2.10	3.30	3.81	8.0	6.7	A++
9	12	14	14	49	1.47	1.96	2.29	2.29	2.4	8.00	10.1	0.45	2.10	3.30	3.81	8.0	6.7	A++
12	12	12	12	48	2.00	2.00	2.00	2.00	2.4	8.00	10.1	0.45	2.10	3.30	3.81	8.0	6.7	A++

NOTES:

- 5: 5,000 Btu/h, 7: 7,000 Btu/h, 9: 9,000 Btu/h, 12: 12,000 Btu/h, 14: 14,000 Btu/h, 18: 18,000 Btu/h, 22: 22,000 Btu/h, 24: 24,000 Btu/h
- Values mentioned in the table are based on the following conditions:
  - Power source of specifications: 230 V
  - Pipe length: 5 m, Height difference: 0 m (Outdoor unit—Indoor unit)
  - Cooling: Indoor temperature of 27 °CDB/19 °CWB, and outdoor temperature of 35 °CDB.
- 2 or more indoor units should be connected.
- The total ability of connected a indoor unit is from 25,000 Btu up to 49,000 Btu.

● Heating

Indoor unit combination (Wall-mounted KG/KM type only)

Combination of indoor unit					Rated capacity for each indoor unit (kW)				Total capacity (kW)			Input power (kW)			COP (W/W)	Seasonal data		
Room				Total	Room				Min.	Rated	Max.	Min.	Rated	Max.		Pdesign (kW)	SCOP (kWh/kWh)	Energy efficien-cy class
1	2	3	4		1	2	3	4										
7	22	—	—	29	2.40	7.20	—	—	3.0	9.60	11.20	0.30	2.47	2.95	3.89	6.5	4.1	A+
7	24	—	—	31	2.17	7.43	—	—	3.0	9.60	11.20	0.30	2.47	2.95	3.89	6.5	4.1	A+
9	22	—	—	31	2.79	6.81	—	—	3.0	9.60	11.20	0.30	2.47	2.95	3.89	6.5	4.1	A+
9	24	—	—	33	2.62	6.98	—	—	3.0	9.60	11.20	0.30	2.47	2.95	3.89	6.5	4.1	A+
12	18	—	—	30	3.84	5.76	—	—	3.0	9.60	11.20	0.30	2.47	2.95	3.89	6.5	4.1	A+
12	22	—	—	34	3.39	6.21	—	—	3.0	9.60	11.20	0.30	2.47	2.95	3.89	6.5	4.1	A+
12	24	—	—	36	3.20	6.40	—	—	3.0	9.60	11.20	0.30	2.47	2.95	3.89	6.5	4.1	A+
14	18	—	—	32	4.20	5.40	—	—	3.0	9.60	11.20	0.30	2.47	2.95	3.89	6.5	4.1	A+
14	22	—	—	36	3.73	5.87	—	—	3.0	9.60	11.20	0.30	2.47	2.95	3.89	6.5	4.1	A+
14	24	—	—	38	3.54	6.06	—	—	3.0	9.60	11.20	0.30	2.47	2.95	3.89	6.5	4.1	A+
18	18	—	—	36	4.80	4.80	—	—	3.0	9.60	11.20	0.30	2.47	2.95	3.89	6.5	4.1	A+
18	22	—	—	40	4.32	5.28	—	—	3.0	9.60	11.20	0.30	2.47	2.95	3.89	6.5	4.1	A+
18	24	—	—	42	4.11	5.49	—	—	3.0	9.60	11.20	0.30	2.47	2.95	3.89	6.5	4.1	A+
22	22	—	—	44	4.80	4.80	—	—	3.0	9.60	11.20	0.30	2.47	2.95	3.89	6.5	4.1	A+
22	24	—	—	46	4.59	5.01	—	—	3.0	9.60	11.20	0.30	2.47	2.95	3.89	6.5	4.1	A+
24	24	—	—	48	4.80	4.80	—	—	3.0	9.60	11.20	0.30	2.47	2.95	3.89	6.5	4.1	A+
7	7	12	—	26	2.40	2.40	4.20	—	3.0	9.00	10.40	0.30	2.11	2.60	4.27	6.0	4.4	A+
7	7	14	—	28	2.40	2.40	4.80	—	3.0	9.60	11.20	0.30	2.27	2.95	4.22	6.5	4.3	A+
7	7	18	—	32	2.10	2.10	5.40	—	3.0	9.60	11.20	0.30	2.27	2.95	4.22	6.5	4.3	A+
7	7	22	—	36	1.87	1.87	5.86	—	3.0	9.60	11.20	0.30	2.27	2.95	4.22	6.5	4.3	A+
7	7	24	—	38	1.77	1.77	6.06	—	3.0	9.60	11.20	0.30	2.27	2.95	4.22	6.5	4.3	A+
7	9	9	—	25	2.40	3.00	3.00	—	3.0	8.40	10.00	0.30	1.94	2.45	4.32	6.0	4.4	A+
7	9	12	—	28	2.40	3.00	4.20	—	3.0	9.60	11.20	0.30	2.27	2.95	4.22	6.5	4.3	A+
7	9	14	—	30	2.24	2.88	4.48	—	3.0	9.60	11.20	0.30	2.27	2.95	4.22	6.5	4.3	A+
7	9	18	—	34	1.98	2.54	5.08	—	3.0	9.60	11.20	0.30	2.27	2.95	4.22	6.5	4.3	A+
7	9	22	—	38	1.77	2.27	5.56	—	3.0	9.60	11.20	0.30	2.27	2.95	4.22	6.5	4.3	A+
7	9	24	—	40	1.68	2.16	5.76	—	3.0	9.60	11.20	0.30	2.27	2.95	4.22	6.5	4.3	A+
7	12	12	—	31	2.16	3.72	3.72	—	3.0	9.60	11.20	0.30	2.27	2.95	4.22	6.5	4.3	A+
7	12	14	—	33	2.04	3.49	4.07	—	3.0	9.60	11.20	0.30	2.27	2.95	4.22	6.5	4.3	A+
7	12	18	—	37	1.82	3.11	4.67	—	3.0	9.60	11.20	0.30	2.27	2.95	4.22	6.5	4.3	A+
7	12	22	—	41	1.64	2.81	5.15	—	3.0	9.60	11.20	0.30	2.27	2.95	4.22	6.5	4.3	A+
7	12	24	—	43	1.56	2.68	5.36	—	3.0	9.60	11.20	0.30	2.27	2.95	4.22	6.5	4.3	A+
7	14	14	—	35	1.92	3.84	3.84	—	3.0	9.60	11.20	0.30	2.27	2.95	4.22	6.5	4.3	A+
7	14	18	—	39	1.72	3.45	4.43	—	3.0	9.60	11.20	0.30	2.27	2.95	4.22	6.5	4.3	A+
7	14	22	—	43	1.56	3.13	4.91	—	3.0	9.60	11.20	0.30	2.27	2.95	4.22	6.5	4.3	A+
7	14	24	—	45	1.49	2.99	5.12	—	3.0	9.60	11.20	0.30	2.27	2.95	4.22	6.5	4.3	A+
7	18	18	—	43	1.56	4.02	4.02	—	3.0	9.60	11.20	0.30	2.27	2.95	4.22	6.5	4.3	A+
7	18	22	—	47	1.43	3.68	4.49	—	3.0	9.60	11.20	0.30	2.27	2.95	4.22	6.5	4.3	A+
7	18	24	—	49	1.37	3.53	4.70	—	3.0	9.60	11.20	0.30	2.27	2.95	4.22	6.5	4.3	A+
9	9	9	—	27	3.00	3.00	3.00	—	3.0	9.00	10.80	0.30	2.11	2.76	4.27	6.0	4.4	A+
9	9	12	—	30	2.88	2.88	3.84	—	3.0	9.60	11.20	0.30	2.27	2.95	4.22	6.5	4.3	A+
9	9	14	—	32	2.70	2.70	4.20	—	3.0	9.60	11.20	0.30	2.27	2.95	4.22	6.5	4.3	A+
9	9	18	—	36	2.40	2.40	4.80	—	3.0	9.60	11.20	0.30	2.27	2.95	4.22	6.5	4.3	A+
9	9	22	—	40	2.16	2.16	5.28	—	3.0	9.60	11.20	0.30	2.27	2.95	4.22	6.5	4.3	A+
9	9	24	—	42	2.06	2.06	5.48	—	3.0	9.60	11.20	0.30	2.27	2.95	4.22	6.5	4.3	A+
9	12	12	—	33	2.62	3.49	3.49	—	3.0	9.60	11.20	0.30	2.27	2.95	4.22	6.5	4.3	A+
9	12	14	—	35	2.47	3.29	3.84	—	3.0	9.60	11.20	0.30	2.27	2.95	4.22	6.5	4.3	A+
9	12	18	—	39	2.22	2.95	4.43	—	3.0	9.60	11.20	0.30	2.27	2.95	4.22	6.5	4.3	A+
9	12	22	—	43	2.01	2.68	4.91	—	3.0	9.60	11.20	0.30	2.27	2.95	4.22	6.5	4.3	A+
9	12	24	—	45	1.92	2.56	5.12	—	3.0	9.60	11.20	0.30	2.27	2.95	4.22	6.5	4.3	A+
9	14	14	—	37	2.34	3.63	3.63	—	3.0	9.60	11.20	0.30	2.27	2.95	4.22	6.5	4.3	A+
9	14	18	—	41	2.11	3.28	4.21	—	3.0	9.60	11.20	0.30	2.27	2.95	4.22	6.5	4.3	A+
9	14	22	—	45	1.92	2.99	4.69	—	3.0	9.60	11.20	0.30	2.27	2.95	4.22	6.5	4.3	A+
9	14	24	—	47	1.84	2.86	4.90	—	3.0	9.60	11.20	0.30	2.27	2.95	4.22	6.5	4.3	A+
9	18	18	—	45	1.92	3.84	3.84	—	3.0	9.60	11.20	0.30	2.27	2.95	4.22	6.5	4.3	A+
12	12	12	—	36	3.20	3.20	3.20	—	3.0	9.60	11.20	0.30	2.27	2.95	4.22	6.5	4.3	A+
12	12	14	—	38	3.03	3.03	3.54	—	3.0	9.60	11.20	0.30	2.27	2.95	4.22	6.5	4.3	A+
12	12	18	—	42	2.74	2.74	4.12	—	3.0	9.60	11.20	0.30	2.27	2.95	4.22	6.5	4.3	A+
12	12	22	—	46	2.50	2.50	4.60	—	3.0	9.60	11.20	0.30	2.27	2.95	4.22	6.5	4.3	A+
12	12	24	—	48	2.40	2.40	4.80	—	3.0	9.60	11.20	0.30	2.27	2.95	4.22	6.5	4.3	A+
12	14	14	—	40	2.88	3.36	3.36	—	3.0	9.60	11.20	0.30	2.27	2.95	4.22	6.5	4.3	A+
12	14	18	—	44	2.62	3.05	3.93	—	3.0	9.60	11.20	0.30	2.27	2.95	4.22	6.5	4.3	A+
12	18	18	—	48	2.40	3.60	3.60	—	3.0	9.60	11.20	0.30	2.27	2.95	4.22	6.5	4.3	A+
14	14	14	—	42	3.20	3.20	3.20	—	3.0	9.60	11.20	0.30	2.27	2.95	4.22	6.5	4.3	A+
14	14	18	—	46	2.92	2.92	3.76	—	3.0	9.60	11.20	0.30	2.27	2.95	4.22	6.5	4.3	A+
7	7	7	7	28	2.40	2.40	2.40	2.40	3.0	9.60	11.20	0.30	2.11	2.95	4.55	6.5	4.6	A++
7	7	7	9	30	2.24	2.24	2.24	2.88	3.0	9.60	11.20	0.30	2.11	2.95	4.55	6.5	4.6	A++
7	7	7	12	33	2.04	2.04	2.04	3.48	3.0	9.60	11.20	0.30	2.11	2.95	4.55	6.5	4.6	A++
7	7	7	14	35	1.92	1.92	1.92	3.84	3.0	9.60	11.20	0.30	2.11	2.95	4.55	6.5	4.6	A++
7	7	7	18	39	1.72	1.72	1.72	4.44	3.0	9.60	11.20	0.30	2.11	2.95	4.55	6.5	4.6	A++
7	7	9	9	32	2.10	2.10	2.70	2.70	3.0	9.60	11.20	0.30	2.11	2.95	4.55	6.5	4.6	A++
7	7	9	12	35	1.92	1.92	2.47	3.29	3.0	9.60	11.20	0.30	2.11	2.95	4.55	6.5	4.6	A++
7	7	9	14	37	1.82	1.82	2.34	3.62	3.0	9.60	11.20	0.30	2.11	2.95	4.55	6.5	4.6	A++
7	7	9	18	41	1.64	1.64	2.11	4.21	3.0	9.60	11.20	0.30	2.11	2.95	4.55	6.5	4.6	A++
7	7	12	12	38	1.77	1.77	3.03	3.03	3.0	9.60	11.20	0.30	2.11	2.95	4.55	6.5	4.6	A++
7	7	12	14	40	1.68	1.68	2.88	3.36	3.0	9.60	11.20	0.30	2.11	2.95	4.55	6.5	4.6	A++
7	7	12	18	44	1.53	1.53	2.62	3.92	3.0	9.60	11.20	0.30	2.11	2.95	4.55	6.5	4.6	A++
7	7	14	14	42	1.60	1.60	3.20	3.20	3.0	9.60	11.20	0.30	2.11	2.95	4.55	6.5	4.6	A++
7	7	14	18	46	1.46	1.46	2.92	3.76	3.0	9.60	11.20	0.30	2.11	2.95	4.55	6.5	4.6	A++
7	9	9	9	34	1.98	2.54	2.54	2.54	3.0	9.60	11.20	0.30	2.11	2.95	4.55	6.5	4.6	A++
7	9	9	12	37	1.81	2.34	2.34	3.11	3.0	9.60	11.20	0.30	2.11	2.95	4.55	6.5	4.6	A++
7	9	9	14	39	1.71	2.22	2.22	3.45	3.0	9.60	11.20	0.30	2.11	2.95	4.55	6.5	4.6	A++
7	9	9	18	43	1.56	2.01	2.01	4.02	3.0	9.60	11.20	0.30	2.11	2.95	4.55	6.5	4.6	A++
7	9	12	12	40	1.68	2.16	2.88	2.88	3.0	9.60	11.20	0.30	2.11	2.95	4.55	6.5	4.6	A++

Combination of indoor unit					Rated capacity for each indoor unit (kW)				Total capacity (kW)			Input power (kW)			COP (W/W)	Seasonal data		
Room				Total	Room				Min.	Rated	Max.	Min.	Rated	Max.		Pdesign (kW)	SCOP (kWh/kWh)	Energy efficien-cy class
1	2	3	4		1	2	3	4										
7	9	12	14	42	1.60	2.06	2.74	3.20	3.0	9.60	11.20	0.30	2.11	2.95	4.55	6.5	4.6	A++
7	9	12	18	46	1.46	1.88	2.5	3.76	3.0	9.60	11.20	0.30	2.11	2.95	4.55	6.5	4.6	A++
7	9	14	14	44	1.54	1.96	3.05	3.05	3.0	9.60	11.20	0.30	2.11	2.95	4.55	6.5	4.6	A++
7	9	14	18	48	1.40	1.80	2.80	3.60	3.0	9.60	11.20	0.30	2.11	2.95	4.55	6.5	4.6	A++
7	12	12	12	43	1.56	2.68	2.68	2.68	3.0	9.60	11.20	0.30	2.11	2.95	4.55	6.5	4.6	A++
7	12	12	14	45	1.49	2.56	2.56	2.99	3.0	9.60	11.20	0.30	2.11	2.95	4.55	6.5	4.6	A++
7	12	12	18	49	1.37	2.35	2.35	3.53	3.0	9.60	11.20	0.30	2.11	2.95	4.55	6.5	4.6	A++
7	12	14	14	47	1.43	2.45	2.86	2.86	3.0	9.60	11.20	0.30	2.11	2.95	4.55	6.5	4.6	A++
9	9	9	9	36	2.40	2.40	2.40	2.40	3.0	9.60	11.20	0.30	2.11	2.95	4.55	6.5	4.6	A++
9	9	9	12	39	2.22	2.22	2.22	2.94	3.0	9.60	11.20	0.30	2.11	2.95	4.55	6.5	4.6	A++
9	9	9	14	41	2.11	2.11	2.11	3.27	3.0	9.60	11.20	0.30	2.11	2.95	4.55	6.5	4.6	A++
9	9	9	18	45	1.92	1.92	1.92	3.84	3.0	9.60	11.20	0.30	2.11	2.95	4.55	6.5	4.6	A++
9	9	12	12	42	2.06	2.06	2.74	2.74	3.0	9.60	11.20	0.30	2.11	2.95	4.55	6.5	4.6	A++
9	9	12	14	44	1.96	1.96	2.62	3.06	3.0	9.60	11.20	0.30	2.11	2.95	4.55	6.5	4.6	A++
9	9	12	18	48	1.80	1.80	2.40	3.60	3.0	9.60	11.20	0.30	2.11	2.95	4.55	6.5	4.6	A++
9	9	14	14	46	1.88	1.88	2.92	2.92	3.0	9.60	11.20	0.30	2.11	2.95	4.55	6.5	4.6	A++
9	12	12	12	45	1.92	2.56	2.56	2.56	3.0	9.60	11.20	0.30	2.11	2.95	4.55	6.5	4.6	A++
9	12	12	14	47	1.84	2.45	2.45	2.86	3.0	9.60	11.20	0.30	2.11	2.95	4.55	6.5	4.6	A++
9	12	14	14	49	1.77	2.35	2.74	2.74	3.0	9.60	11.20	0.30	2.11	2.95	4.55	6.5	4.6	A++
12	12	12	12	48	2.40	2.40	2.40	2.40	3.0	9.60	11.20	0.30	2.11	2.95	4.55	6.5	4.6	A++

Indoor unit combination (All models other than wall-mounted type KG/KM models)

Combination of indoor unit					Rated capacity for each indoor unit (kW)				Total capacity (kW)			Input power (kW)			COP (W/W)	Seasonal data		
Room				Total	Room				Min.	Rated	Max.	Min.	Rated	Max.		Pdesign (kW)	SCOP (kWh/kWh)	Energy efficien-cy class
1	2	3	4		1	2	3	4										
5	22	—	—	27	1.67	7.33	—	—	3.0	9.00	10.6	0.30	2.46	2.83	3.66	6	4	A+
5	24	—	—	29	1.66	7.94	—	—	3.0	9.60	10.7	0.30	2.55	3.03	3.76	6.5	3.9	A
7	22	—	—	29	2.40	7.20	—	—	3.0	9.60	11.2	0.30	2.55	3.03	3.76	6.5	3.9	A
7	24	—	—	31	2.17	7.43	—	—	3.0	9.60	11.2	0.30	2.55	3.03	3.76	6.5	3.9	A
9	22	—	—	31	2.79	6.81	—	—	3.0	9.60	11.2	0.30	2.55	3.03	3.76	6.5	3.9	A
9	24	—	—	33	2.62	6.98	—	—	3.0	9.60	11.2	0.30	2.55	3.03	3.76	6.5	3.9	A
12	18	—	—	30	3.84	5.76	—	—	3.0	9.60	11.2	0.30	2.55	3.03	3.76	6.5	3.9	A
12	22	—	—	34	3.39	6.21	—	—	3.0	9.60	11.2	0.30	2.55	3.03	3.76	6.5	3.9	A
12	24	—	—	36	3.20	6.40	—	—	3.0	9.60	11.2	0.30	2.55	3.03	3.76	6.5	3.9	A
14	18	—	—	32	4.20	5.40	—	—	3.0	9.60	11.2	0.30	2.55	3.03	3.75	6.5	3.9	A
14	22	—	—	36	3.73	5.87	—	—	3.0	9.60	11.2	0.30	2.55	3.03	3.75	6.5	3.9	A
14	24	—	—	38	3.54	6.06	—	—	3.0	9.60	11.2	0.30	2.55	3.03	3.75	6.5	3.9	A
18	18	—	—	36	4.80	4.80	—	—	3.0	9.60	11.2	0.30	2.55	3.03	3.76	6.5	3.9	A
18	22	—	—	40	4.32	5.28	—	—	3.0	9.60	11.2	0.30	2.55	3.03	3.76	6.5	3.9	A
18	24	—	—	42	4.11	5.49	—	—	3.0	9.60	11.2	0.30	2.55	3.03	3.76	6.5	3.9	A
22	22	—	—	44	4.80	4.80	—	—	3.0	9.60	11.2	0.30	2.55	3.03	3.76	6.5	3.9	A
22	24	—	—	46	4.59	5.01	—	—	3.0	9.60	11.2	0.30	2.55	3.03	3.76	6.5	3.9	A
24	24	—	—	48	4.80	4.80	—	—	3.0	9.60	11.2	0.30	2.55	3.03	3.76	6.5	3.9	A
5	5	18	—	28	1.71	1.71	6.17	—	3.0	9.60	10.7	0.30	2.36	3.03	4.06	6.5	4	A+
5	5	22	—	32	1.50	1.50	6.60	—	3.0	9.60	11.2	0.30	2.36	3.03	4.06	6.5	4	A+
5	5	24	—	34	1.41	1.41	6.78	—	3.0	9.60	11.2	0.30	2.36	3.03	4.06	6.5	4	A+
5	7	18	—	30	1.60	2.24	5.76	—	3.0	9.60	11.2	0.30	2.36	3.03	4.06	6.5	4	A+
5	7	22	—	34	1.41	1.98	6.21	—	3.0	9.60	11.2	0.30	2.36	3.03	4.06	6.5	4	A+
5	7	24	—	36	1.33	1.87	6.40	—	3.0	9.60	11.2	0.30	2.36	3.03	4.06	6.5	4	A+
5	9	14	—	28	1.71	3.09	4.80	—	3.0	9.60	11.2	0.30	2.36	3.03	4.06	6.5	4	A+
5	9	18	—	32	1.50	2.70	5.40	—	3.0	9.60	11.2	0.30	2.36	3.03	4.06	6.5	4	A+
5	9	22	—	36	1.33	2.40	5.87	—	3.0	9.60	11.2	0.30	2.36	3.03	4.06	6.5	4	A+
5	9	24	—	38	1.26	2.27	6.06	—	3.0	9.60	11.2	0.30	2.36	3.03	4.06	6.5	4	A+
5	12	12	—	29	1.66	3.97	3.97	—	3.0	9.60	11.2	0.30	2.36	3.03	4.06	6.5	4	A+
5	12	14	—	31	1.55	3.72	4.34	—	3.0	9.60	11.2	0.30	2.36	3.03	4.06	6.5	4	A+
5	12	18	—	35	1.37	3.29	4.94	—	3.0	9.60	11.2	0.30	2.36	3.03	4.06	6.5	4	A+
5	12	22	—	39	1.23	2.95	5.42	—	3.0	9.60	11.2	0.30	2.36	3.03	4.06	6.5	4	A+
5	12	24	—	41	1.17	2.81	5.62	—	3.0	9.60	11.2	0.30	2.36	3.03	4.06	6.5	4	A+
5	14	14	—	33	1.45	4.07	4.07	—	3.0	9.60	11.2	0.30	2.36	3.03	4.06	6.5	4	A+
5	14	18	—	37	1.30	3.63	4.67	—	3.0	9.60	11.2	0.30	2.36	3.03	4.06	6.5	4	A+
5	14	22	—	41	1.17	3.28	5.15	—	3.0	9.60	11.2	0.30	2.36	3.03	4.06	6.5	4	A+
5	14	24	—	43	1.12	3.13	5.36	—	3.0	9.60	11.2	0.30	2.36	3.03	4.06	6.5	4	A+
5	18	18	—	41	1.17	4.21	4.21	—	3.0	9.60	11.2	0.30	2.36	3.03	4.06	6.5	4	A+
5	18	22	—	45	1.07	3.84	4.69	—	3.0	9.60	11.2	0.30	2.36	3.03	4.06	6.5	4	A+
5	18	24	—	47	1.02	3.68	4.90	—	3.0	9.60	11.2	0.30	2.36	3.03	4.06	6.5	4	A+
7	7	12	—	26	2.40	2.40	4.20	—	3.0	9.00	10.4	0.30	2.18	2.71	4.12	6	4.1	A+
7	7	14	—	28	2.40	2.40	4.80	—	3.0	9.60	11.2	0.30	2.36	3.03	4.07	6.5	4	A+
7	7	18	—	32	2.10	2.10	5.40	—	3.0	9.60	11.2	0.30	2.36	3.03	4.07	6.5	4	A+
7	7	22	—	36	1.87	1.87	5.87	—	3.0	9.60	11.2	0.30	2.36	3.03	4.07	6.5	4	A+
7	7	24	—	38	1.77	1.77	6.06	—	3.0	9.60	11.2	0.30	2.36	3.03	4.07	6.5	4	A+
7	9	9	—	25	2.40	3.00	3.00	—	3.0	8.40	10.0	0.30	2.08	2.59	4.03	6	4.1	A+
7	9	12	—	28	2.40	3.00	4.20	—	3.0	9.60	11.2	0.30	2.36	3.03	4.07	6.5	4	A+
7	9	14	—	30	2.24	2.88	4.48	—	3.0	9.60	11.2	0.30	2.36	3.03	4.07	6.5	4	A+
7	9	18	—	34	1.98	2.54	5.08	—	3.0	9.60	11.2	0.30	2.36	3.03	4.07	6.5	4	A+
7	9	22	—	38	1.77	2.27	5.56	—	3.0	9.60	11.2	0.30	2.36	3.03	4.07	6.5	4	A+
7	9	24	—	40	1.68	2.16	5.76	—	3.0	9.60	11.2	0.30	2.36	3.03	4.07	6.5	4	A+
7	12	12	—	31	2.17	3.72	3.72	—	3.0	9.60	11.2	0.30	2.36	3.03	4.07	6.5	4	A+
7	12	14	—	33	2.04	3.49	4.07	—	3.0	9.60	11.2	0.30	2.36	3.03	4.07	6.5	4	A+
7	12	18	—	37	1.82	3.11	4.67	—	3.0	9.60	11.2	0.30	2.36	3.03	4.07	6.5	4	A+
7	12	22	—	41	1.64	2.81	5.15	—	3.0	9.60	11.2	0.30	2.36	3.03	4.07	6.5	4	A+
7	12	24	—	43	1.56	2.68	5.36	—	3.0	9.60	11.2	0.30	2.36	3.03	4.07	6.5	4	A+
7	14	14	—	35	1.92	3.84	3.84	—	3.0	9.60	11.2	0.30	2.36	3.03	4.07	6.5	4	A+
7	14	18	—	39	1.72	3.45	4.43	—	3.0	9.60	11.2	0.30	2.36	3.03	4.07	6.5	4	A+
7	14	22	—	43	1.56	3.13	4.91	—	3.0	9.60	11.2	0.30	2.36	3.03	4.07	6.5	4	A+
7	14	24	—	45	1.49	2.99	5.12	—	3.0	9.60	11.2	0.30	2.36	3.03	4.07	6.5	4	A+

Combination of indoor unit					Rated capacity for each indoor unit (kW)				Total capacity (kW)			Input power (kW)			COP (W/W)	Seasonal data		
Room				Total	Room											Pdesign (kW)	SCOP (kWh/kWh)	Energy efficien-cy class
1	2	3	4		1	2	3	4	Min.	Rated	Max.	Min.	Rated	Max.				
7	18	18	—	43	1.56	4.02	4.02	—	3.0	9.60	11.2	0.30	2.36	3.03	4.07	6.5	4	A+
7	18	22	—	47	1.43	3.68	4.49	—	3.0	9.60	11.2	0.30	2.36	3.03	4.07	6.5	4	A+
7	18	24	—	49	1.37	3.53	4.70	—	3.0	9.60	11.2	0.30	2.36	3.03	4.07	6.5	4	A+
9	9	9	—	27	3.00	3.00	3.00	—	3.0	9.00	10.8	0.30	2.18	2.83	4.13	6	4.1	A+
9	9	12	—	30	2.88	2.88	3.84	—	3.0	9.60	11.2	0.30	2.36	3.03	4.07	6.5	4	A+
9	9	14	—	32	2.70	2.70	4.20	—	3.0	9.60	11.2	0.30	2.36	3.03	4.07	6.5	4	A+
9	9	18	—	36	2.40	2.40	4.80	—	3.0	9.60	11.2	0.30	2.36	3.03	4.07	6.5	4	A+
9	9	22	—	40	2.16	2.16	5.28	—	3.0	9.60	11.2	0.30	2.36	3.03	4.07	6.5	4	A+
9	9	24	—	42	2.06	2.06	5.49	—	3.0	9.60	11.2	0.30	2.36	3.03	4.07	6.5	4	A+
9	12	12	—	33	2.62	3.49	3.49	—	3.0	9.60	11.2	0.30	2.36	3.03	4.07	6.5	4	A+
9	12	14	—	35	2.47	3.29	3.84	—	3.0	9.60	11.2	0.30	2.36	3.03	4.07	6.5	4	A+
9	12	18	—	39	2.22	2.95	4.43	—	3.0	9.60	11.2	0.30	2.36	3.03	4.07	6.5	4	A+
9	12	22	—	43	2.01	2.68	4.91	—	3.0	9.60	11.2	0.30	2.36	3.03	4.07	6.5	4	A+
9	12	24	—	45	1.92	2.56	5.12	—	3.0	9.60	11.2	0.30	2.36	3.03	4.07	6.5	4	A+
9	14	14	—	37	2.34	3.63	3.63	—	3.0	9.60	11.2	0.30	2.36	3.03	4.07	6.5	4	A+
9	14	18	—	41	2.11	3.28	4.21	—	3.0	9.60	11.2	0.30	2.36	3.03	4.07	6.5	4	A+
9	14	22	—	45	1.92	2.99	4.69	—	3.0	9.60	11.2	0.30	2.36	3.03	4.07	6.5	4	A+
9	14	24	—	47	1.84	2.86	4.90	—	3.0	9.60	11.2	0.30	2.36	3.03	4.07	6.5	4	A+
9	18	18	—	45	1.92	3.84	3.84		3.0	9.60	11.2	0.30	2.35	3.03	4.07	6.5	4	A+
12	12	12	—	36	3.20	3.20	3.20	—	3.0	9.60	11.2	0.30	2.36	3.03	4.07	6.5	4	A+
12	12	14	—	38	3.03	3.03	3.54	—	3.0	9.60	11.2	0.30	2.36	3.03	4.07	6.5	4	A+
12	12	18	—	42	2.74	2.74	4.11	—	3.0	9.60	11.2	0.30	2.36	3.03	4.07	6.5	4	A+
12	12	22	—	46	2.50	2.50	4.59	—	3.0	9.60	11.2	0.30	2.36	3.03	4.07	6.5	4	A+
12	12	24	—	48	2.40	2.40	4.80	—	3.0	9.60	11.2	0.30	2.36	3.03	4.07	6.5	4	A+
12	14	14	—	40	2.88	3.36	3.36	—	3.0	9.60	11.2	0.30	2.36	3.03	4.07	6.5	4	A+
12	14	18	—	44	2.62	3.05	3.93	—	3.0	9.60	11.2	0.30	2.36	3.03	4.07	6.5	4	A+
12	18	18	—	48	2.40	3.60	3.60	—	3.0	9.60	11.2	0.30	2.36	3.03	4.07	6.5	4	A+
14	14	14	—	42	3.20	3.20	3.20	—	3.0	9.60	11.2	0.30	2.36	3.03	4.07	6.5	4	A+
14	14	18	—	46	2.92	2.92	3.76	—	3.0	9.60	11.2	0.30	2.36	3.03	4.07	6.5	4.3	A+
5	5	5	12	27	1.67	1.67	1.67	4.00	3.0	9.00	10.8	0.30	2.10	2.83	4.28	6.5	4.3	A+
5	5	5	14	29	1.66	1.66	1.66	4.63	3.0	9.60	11.2	0.30	2.19	3.03	4.38	6.5	4.3	A+
5	5	5	18	33	1.45	1.45	1.45	5.24	3.0	9.60	11.2	0.30	2.19	3.03	4.38	6.5	4.3	A+
5	5	5	22	37	1.30	1.30	1.30	5.71	3.0	9.60	11.2	0.30	2.19	3.03	4.38	6.5	4.3	A+
5	5	5	24	39	1.23	1.23	1.23	5.91	3.0	9.60	11.2	0.30	2.19	3.03	4.38	6.5	4.3	A+
5	5	7	12	29	1.66	1.66	2.32	3.97	3.0	9.60	11.2	0.30	2.19	3.03	4.38	6.5	4.3	A+
5	5	7	14	31	1.55	1.55	2.17	4.34	3.0	9.60	11.2	0.30	2.19	3.03	4.38	6.5	4.3	A+
5	5	7	18	35	1.37	1.37	1.92	4.94	3.0	9.60	11.2	0.30	2.19	3.03	4.38	6.5	4.3	A+
5	5	7	22	39	1.23	1.23	1.72	5.42	3.0	9.60	11.2	0.30	2.19	3.03	4.38	6.5	4.3	A+
5	5	7	24	41	1.17	1.17	1.64	5.62	3.0	9.60	11.2	0.30	2.19	3.03	4.38	6.5	4.3	A+
5	5	9	9	28	1.71	1.71	3.09	3.09	3.0	9.60	11.2	0.30	2.19	3.03	4.38	6.5	4.3	A+
5	5	9	12	31	1.55	1.55	2.79	3.72	3.0	9.60	11.2	0.30	2.19	3.03	4.38	6.5	4.3	A+
5	5	9	14	33	1.45	1.45	2.62	4.07	3.0	9.60	11.2	0.30	2.19	3.03	4.38	6.5	4.3	A+
5	5	9	18	37	1.30	1.30	2.34	4.67	3.0	9.60	11.2	0.30	2.19	3.03	4.38	6.5	4.3	A+
5	5	9	24	43	1.12	1.12	2.01	5.36	3.0	9.60	11.2	0.30	2.19	3.03	4.38	6.5	4.3	A+
5	5	12	12	34	1.41	1.41	3.39	3.39	3.0	9.60	11.2	0.30	2.19	3.03	4.38	6.5	4.3	A+
5	5	12	14	36	1.33	1.33	3.20	3.73	3.0	9.60	11.2	0.30	2.19	3.03	4.38	6.5	4.3	A+
5	5	12	18	40	1.20	1.20	2.88	4.32	3.0	9.60	11.2	0.30	2.19	3.03	4.38	6.5	4.3	A+
5	5	12	24	46	1.04	1.04	2.5	5.01	3.0	9.60	11.2	0.30	2.19	3.03	4.38	6.5	4.3	A+
5	5	14	14	38	1.26	1.26	3.54	3.54	3.0	9.60	11.2	0.30	2.19	3.03	4.38	6.5	4.3	A+
5	5	14	18	42	1.14	1.14	3.2	4.11	3.0	9.60	11.2	0.30	2.19	3.03	4.38	6.5	4.3	A+
5	5	18	18	46	1.04	1.04	3.76	3.76	3.0	9.60	11.2	0.30	2.19	3.03	4.38	6.5	4.3	A+
5	7	7	9	28	1.71	2.40	2.40	3.09	3.0	9.60	11.2	0.30	2.19	3.03	4.38	6.5	4.3	A+
5	7	7	12	31	1.55	2.17	2.17	3.72	3.0	9.60	11.2	0.30	2.19	3.03	4.38	6.5	4.3	A+
5	7	7	14	33	1.45	2.04	2.04	4.07	3.0	9.60	11.2	0.30	2.19	3.03	4.38	6.5	4.3	A+
5	7	7	18	37	1.3	1.82	1.82	4.67	3.0	9.60	11.2	0.30	2.19	3.03	4.38	6.5	4.3	A+
5	7	7	22	41	1.17	1.64	1.64	5.15	3.0	9.60	11.2	0.30	2.19	3.03	4.38	6.5	4.3	A+
5	7	7	24	43	1.12	1.56	1.56	5.36	3.0	9.60	11.2	0.30	2.19	3.03	4.38	6.5	4.3	A+
5	7	9	9	30	1.60	2.24	2.88	2.88	3.0	9.60	11.2	0.30	2.19	3.03	4.38	6.5	4.3	A+
5	7	9	12	33	1.45	2.04	2.62	3.49	3.0	9.60	11.2	0.30	2.19	3.03	4.38	6.5	4.3	A+
5	7	9	14	35	1.37	1.92	2.47	3.84	3.0	9.60	11.2	0.30	2.19	3.03	4.38	6.5	4.3	A+
5	7	9	18	39	1.23	1.72	2.22	4.43	3.0	9.60	11.2	0.30	2.19	3.03	4.38	6.5	4.3	A+
5	7	9	24	45	1.07	1.49	1.92	5.12	3.0	9.60	11.2	0.30	2.19	3.03	4.38	6.5	4.3	A+
5	7	12	12	36	1.33	1.87	3.20	3.20	3.0	9.60	11.2	0.30	2.19	3.03	4.38	6.5	4.3	A+
5	7	12	14	38	1.26	1.77	3.03	3.54	3.0	9.60	11.2	0.30	2.19	3.03	4.38	6.5	4.3	A+
5	7	12	18	42	1.14	1.60	2.74	4.11	3.0	9.60	11.2	0.30	2.19	3.03	4.38	6.5	4.3	A+
5	7	12	24	48	1.00	1.40	2.40	4.80	3.0	9.60	11.2	0.30	2.19	3.03	4.38	6.5	4.3	A+
5	7	14	14	40	1.20	1.68	3.36	3.36	3.0	9.60	11.2	0.30	2.19	3.03	4.38	6.5	4.3	A+
5	7	14	18	44	1.09	1.53	3.05	3.93	3.0	9.60	11.2	0.30	2.19	3.03	4.38	6.5	4.3	A+
5	7	18	18	48	1.00	1.40	3.60	3.60	3.0	9.60	11.2	0.30	2.19	3.03	4.38	6.5	4.3	A+
5	9	9	9	32	1.50	2.70	2.70	2.70	3.0	9.60	11.2	0.30	2.19	3.03	4.38	6.5	4.3	A+
5	9	9	12	35	1.37	2.47	2.47	3.29	3.0	9.60	11.2	0.30	2.19	3.03	4.38	6.5	4.3	A+
5	9	9	14	37	1.30	2.34	2.34	3.63	3.0	9.60	11.2	0.30	2.19	3.03	4.38	6.5	4.3	A+
5	9	9	18	41	1.17	2.11	2.11	4.21	3.0	9.60	11.2	0.30	2.19	3.03	4.38	6.5	4.3	A+
5	9	12	12	38	1.26	2.27	3.03	3.03	3.0	9.60	11.2	0.30	2.19	3.03	4.38	6.5	4.3	A+
5	9	12	14	40	1.20	2.16	2.88	3.36	3.0	9.60	11.2	0.30	2.19	3.03	4.38	6.5	4.3	A+
5	9	12	18	44	1.09	1.96	2.62	3.93	3.0	9.60	11.2	0.30	2.19	3.03	4.38	6.5	4.3	A+
5	9	14	14	42	1.14	2.06	3.20	3.20	3.0	9.60	11.2	0.30	2.19	3.03	4.38	6.5	4.3	A+
5	9	14	18	46	1.04	1.88	2.92	3.76	3.0	9.60	11.2	0.30	2.19	3.03	4.38	6.5	4.3	A+
5	12	12	12	41	1.17	2.81	2.81	2.81	3.0	9.60	11.2	0.30	2.19	3.03	4.38	6.5	4.3	A+
5	12	12	14	43	1.12	2.68	2.68	3.13	3.0	9.60	11.2	0.30	2.19	3.03	4.38	6.5	4.3	A+
5	12	12	18	47	1.02	2.45	2.45	3.68	3.0	9.60	11.2	0.30	2.19	3.03	4.38	6.5	4.3	A+
5	12	14	14	45	1.07	2.56	2.99	2.99	3.0	9.60	11.2	0.30	2.19	3.03	4.38	6.5	4.3	A+
5	12	14	18	49	0.98	2.35	2.74	3.53	3.0	9.60	11.2	0.30	2.19	3.03	4.38	6.5	4.3	A+
5	14	14	14	47	1.02	2.86	2.86	2.86	3.0	9.60	11.2	0.30	2.19	3.03	4.38	6.5	4.3	A+
7	7	7	7	28	2.40	2.40	2.40	2.40	3.0	9.60	11.2	0.30	2.19	3.03	4.37	6.5	4.3	A+
7	7	7	9	30	2.24	2.24	2.24	2.88	3.0	9.60	11.2	0.30	2.19	3.03	4.37	6.5	4.3	A+
7	7	7	12	33	2.04	2.04	2.04	3.49	3.0	9.60	11.2	0.30	2.19	3.03	4.37	6.5	4.3	A+
7	7	7	14	35	1.92	1.92	1.92	3.84	3.0	9.60	11.2	0.30	2.19	3.03	4.37	6.5	4.3	A+
7	7	7	18	39	1.72	1.72	1.72	4.43	3.0	9.60	11.2	0.30	2.19	3.03	4.37	6.5	4.3	A+

Combination of indoor unit					Rated capacity for each indoor unit (kW)				Total capacity (kW)			Input power (kW)			COP (W/W)	Seasonal data		
Room				Total	Room											Pdesign (kW)	SCOP (kWh/kWh)	Energy efficien-cy class
1	2	3	4		1	2	3	4	Min.	Rated	Max.	Min.	Rated	Max.				
7	7	9	9	32	2.10	2.10	2.70	2.70	3.0	9.60	11.2	0.30	2.19	3.03	4.37	6.5	4.3	A+
7	7	9	12	35	1.92	1.92	2.47	3.29	3.0	9.60	11.2	0.30	2.19	3.03	4.37	6.5	4.3	A+
7	7	9	14	37	1.82	1.82	2.34	3.63	3.0	9.60	11.2	0.30	2.19	3.03	4.37	6.5	4.3	A+
7	7	9	18	41	1.64	1.64	2.11	4.21	3.0	9.60	11.2	0.30	2.19	3.03	4.37	6.5	4.3	A+
7	7	12	12	38	1.77	1.77	3.03	3.03	3.0	9.60	11.2	0.30	2.19	3.03	4.37	6.5	4.3	A+
7	7	12	14	40	1.68	1.68	2.88	3.36	3.0	9.60	11.2	0.30	2.19	3.03	4.37	6.5	4.3	A+
7	7	12	18	44	1.53	1.53	2.62	3.93	3.0	9.60	11.2	0.30	2.19	3.03	4.37	6.5	4.3	A+
7	7	14	14	42	1.60	1.60	3.20	3.20	3.0	9.60	11.2	0.30	2.19	3.03	4.37	6.5	4.3	A+
7	7	14	18	46	1.46	1.46	2.92	3.76	3.0	9.60	11.2	0.30	2.19	3.03	4.37	6.5	4.3	A+
7	9	9	9	34	1.98	2.54	2.54	2.54	3.0	9.60	11.2	0.30	2.19	3.03	4.37	6.5	4.3	A+
7	9	9	12	37	1.82	2.34	2.34	3.11	3.0	9.60	11.2	0.30	2.19	3.03	4.37	6.5	4.3	A+
7	9	9	14	39	1.72	2.22	2.22	3.45	3.0	9.60	11.2	0.30	2.19	3.03	4.37	6.5	4.3	A+
7	9	9	18	43	1.56	2.01	2.01	4.02	3.0	9.60	11.2	0.30	2.19	3.03	4.37	6.5	4.3	A+
7	9	12	12	40	1.68	2.16	2.88	2.88	3.0	9.60	11.2	0.30	2.19	3.03	4.37	6.5	4.3	A+
7	9	12	14	42	1.60	2.06	2.74	3.20	3.0	9.60	11.2	0.30	2.19	3.03	4.37	6.5	4.3	A+
7	9	12	18	46	1.46	1.88	2.50	3.76	3.0	9.60	11.2	0.30	2.19	3.03	4.37	6.5	4.3	A+
7	9	14	14	44	1.53	1.96	3.05	3.05	3.0	9.60	11.2	0.30	2.19	3.03	4.37	6.5	4.3	A+
7	9	14	18	48	1.40	1.80	2.80	3.60	3.0	9.60	11.2	0.30	2.19	3.03	4.37	6.5	4.3	A+
7	12	12	12	43	1.56	2.68	2.68	2.68	3.0	9.60	11.2	0.30	2.19	3.03	4.37	6.5	4.3	A+
7	12	12	14	45	1.49	2.56	2.56	2.99	3.0	9.60	11.2	0.30	2.19	3.03	4.37	6.5	4.3	A+
7	12	12	18	49	1.37	2.35	2.35	3.53	3.0	9.60	11.2	0.30	2.19	3.03	4.37	6.5	4.3	A+
7	12	14	14	47	1.43	2.45	2.86	2.86	3.0	9.60	11.2	0.30	2.19	3.03	4.37	6.5	4.3	A+
9	9	9	9	36	2.40	2.40	2.40	2.40	3.0	9.60	11.2	0.30	2.19	3.03	4.37	6.5	4.3	A+
9	9	9	12	39	2.22	2.22	2.22	2.95	3.0	9.60	11.2	0.30	2.19	3.03	4.37	6.5	4.3	A+
9	9	9	14	41	2.11	2.11	2.11	3.28	3.0	9.60	11.2	0.30	2.19	3.03	4.37	6.5	4.3	A+
9	9	9	18	45	1.92	1.92	1.92	3.84	3.0	9.60	11.2	0.30	2.19	3.03	4.37	6.5	4.3	A+
9	9	12	12	42	2.06	2.06	2.74	2.74	3.0	9.60	11.2	0.30	2.19	3.03	4.37	6.5	4.3	A+
9	9	12	14	44	1.96	1.96	2.62	3.05	3.0	9.60	11.2	0.30	2.19	3.03	4.37	6.5	4.3	A+
9	9	12	18	48	1.80	1.80	2.40	3.60	3.0	9.60	11.2	0.30	2.19	3.03	4.37	6.5	4.3	A+
9	9	14	14	46	1.88	1.88	2.92	2.92	3.0	9.60	11.2	0.30	2.19	3.03	4.37	6.5	4.3	A+
9	12	12	12	45	1.92	2.56	2.56	2.56	3.0	9.60	11.2	0.30	2.19	3.03	4.37	6.5	4.3	A+
9	12	12	14	47	1.84	2.45	2.45	2.86	3.0	9.60	11.2	0.30	2.19	3.03	4.37	6.5	4.3	A+
9	12	14	14	49	1.76	2.35	2.74	2.74	3.0	9.60	11.2	0.30	2.19	3.03	4.37	6.5	4.3	A+
12	12	12	12	48	2.40	2.40	2.40	2.40	3.0	9.60	11.2	0.30	2.19	3.03	4.37	6.5	4.3	A+

NOTES:

- 5: 5,000 Btu/h, 7: 7,000 Btu/h, 9: 9,000 Btu/h, 12: 12,000 Btu/h, 14: 14,000 Btu/h, 18: 18,000 Btu/h, 22: 22,000 Btu/h, 24: 24,000 Btu/h
- Values mentioned in the table are based on the following conditions:
  - Power source of specifications: 230 V
  - Pipe length: 5 m, Height difference: 0 m (Outdoor unit—Indoor unit)
  - Heating: Indoor temperature of 20 °CDB, and outdoor temperature of 7 °CDB/6 °CWB.
- 2 or more indoor units should be connected.
- The total ability of connected a indoor unit is from 25,000 Btu up to 49,000 Btu.

6-2. Cooling capacity

NOTE: Values mentioned in the table are calculated based on the maximum capacity.

■ Model: AOEG30KBTA4

Indoor unit connecting capacity	Outdoor temperature	Indoor temperature											
		18.0 °CDB		21.0 °CDB		23.0 °CDB		27.0 °CDB		29.0 °CDB		32.0 °CDB	
		12.0 °CWB		15.0 °CWB		16.0 °CWB		19.0 °CWB		21.0 °CWB		23.0 °CWB	
kBtu/h	°CDB	TC	IP	TC	IP	TC	IP	TC	IP	TC	IP	TC	IP
49	-10.0	7.9	1.94	8.9	1.97	9.4	1.99	10.1	2.01	10.8	2.03	11.1	2.05
	0.0	7.9	2.02	8.9	2.05	9.4	2.07	10.1	2.09	10.8	2.11	11.1	2.13
	5.0	7.9	1.98	8.9	2.02	9.4	2.03	10.1	2.05	10.8	2.08	11.1	2.09
	10.0	7.9	2.11	8.9	2.14	9.4	2.16	10.1	2.19	10.8	2.21	11.1	2.22
	15.0	7.9	2.00	8.9	2.04	9.4	2.05	10.1	2.08	10.8	2.10	11.1	2.11
	20.0	7.9	1.89	8.9	1.93	9.4	1.94	10.1	1.97	10.8	1.99	11.1	2.00
	25.0	7.9	2.29	8.9	2.33	9.4	2.35	10.1	2.38	10.8	2.40	11.1	2.42
	30.0	7.9	2.74	8.9	2.79	9.4	2.82	10.1	2.85	10.8	2.88	11.1	2.90
	35.0	7.9	3.18	8.9	3.24	9.4	3.26	10.1	3.30	10.8	3.34	11.1	3.35
	40.0	6.6	2.69	7.4	2.74	7.8	2.76	8.4	2.79	8.9	2.82	9.2	2.84
	46.0	5.2	2.20	5.9	2.24	6.2	2.25	6.6	2.28	7.1	2.31	7.3	2.32
48	-10.0	7.9	1.94	8.9	1.97	9.4	1.99	10.1	2.01	10.8	2.03	11.1	2.05
	0.0	7.9	2.02	8.9	2.05	9.4	2.07	10.1	2.09	10.8	2.11	11.1	2.13
	5.0	7.9	1.98	8.9	2.02	9.4	2.03	10.1	2.05	10.8	2.08	11.1	2.09
	10.0	7.9	2.11	8.9	2.14	9.4	2.16	10.1	2.19	10.8	2.21	11.1	2.22
	15.0	7.9	2.00	8.9	2.04	9.4	2.05	10.1	2.08	10.8	2.10	11.1	2.11
	20.0	7.9	1.89	8.9	1.93	9.4	1.94	10.1	1.97	10.8	1.99	11.1	2.00
	25.0	7.9	2.29	8.9	2.33	9.4	2.35	10.1	2.38	10.8	2.40	11.1	2.42
	30.0	7.9	2.74	8.9	2.79	9.4	2.82	10.1	2.85	10.8	2.88	11.1	2.90
	35.0	7.9	3.18	8.9	3.24	9.4	3.26	10.1	3.30	10.8	3.34	11.1	3.35
	40.0	6.6	2.69	7.4	2.74	7.8	2.76	8.4	2.79	8.9	2.82	9.2	2.84
	46.0	5.2	2.20	5.9	2.24	6.2	2.25	6.6	2.28	7.1	2.31	7.3	2.32
47	-10.0	7.9	1.94	8.9	1.97	9.4	1.99	10.1	2.01	10.8	2.03	11.1	2.05
	0.0	7.9	2.02	8.9	2.05	9.4	2.07	10.1	2.09	10.8	2.11	11.1	2.13
	5.0	7.9	1.98	8.9	2.02	9.4	2.03	10.1	2.05	10.8	2.08	11.1	2.09
	10.0	7.9	2.11	8.9	2.14	9.4	2.16	10.1	2.19	10.8	2.21	11.1	2.22
	15.0	7.9	2.00	8.9	2.04	9.4	2.05	10.1	2.08	10.8	2.10	11.1	2.11
	20.0	7.9	1.89	8.9	1.93	9.4	1.94	10.1	1.97	10.8	1.99	11.1	2.00
	25.0	7.9	2.29	8.9	2.33	9.4	2.35	10.1	2.38	10.8	2.40	11.1	2.42
	30.0	7.9	2.74	8.9	2.79	9.4	2.82	10.1	2.85	10.8	2.88	11.1	2.90
	35.0	7.9	3.18	8.9	3.24	9.4	3.26	10.1	3.30	10.8	3.34	11.1	3.35
	40.0	6.6	2.69	7.4	2.74	7.8	2.76	8.4	2.79	8.9	2.82	9.2	2.84
	46.0	5.2	2.20	5.9	2.24	6.2	2.25	6.6	2.28	7.1	2.31	7.3	2.32
46	-10.0	7.9	1.94	8.9	1.97	9.4	1.99	10.1	2.01	10.8	2.03	11.1	2.05
	0.0	7.9	2.02	8.9	2.05	9.4	2.07	10.1	2.09	10.8	2.11	11.1	2.13
	5.0	7.9	1.98	8.9	2.02	9.4	2.03	10.1	2.05	10.8	2.08	11.1	2.09
	10.0	7.9	2.11	8.9	2.14	9.4	2.16	10.1	2.19	10.8	2.21	11.1	2.22
	15.0	7.9	2.00	8.9	2.04	9.4	2.05	10.1	2.08	10.8	2.10	11.1	2.11
	20.0	7.9	1.89	8.9	1.93	9.4	1.94	10.1	1.97	10.8	1.99	11.1	2.00
	25.0	7.9	2.29	8.9	2.33	9.4	2.35	10.1	2.38	10.8	2.40	11.1	2.42
	30.0	7.9	2.74	8.9	2.79	9.4	2.82	10.1	2.85	10.8	2.88	11.1	2.90
	35.0	7.9	3.18	8.9	3.24	9.4	3.26	10.1	3.30	10.8	3.34	11.1	3.35
	40.0	6.6	2.69	7.4	2.74	7.8	2.76	8.4	2.79	8.9	2.82	9.2	2.84
	46.0	5.2	2.20	5.9	2.24	6.2	2.25	6.6	2.28	7.1	2.31	7.3	2.32
45	-10.0	7.9	1.94	8.9	1.97	9.4	1.99	10.1	2.01	10.8	2.03	11.1	2.05
	0.0	7.9	2.02	8.9	2.05	9.4	2.07	10.1	2.09	10.8	2.11	11.1	2.13
	5.0	7.9	1.98	8.9	2.02	9.4	2.03	10.1	2.05	10.8	2.08	11.1	2.09
	10.0	7.9	2.11	8.9	2.14	9.4	2.16	10.1	2.19	10.8	2.21	11.1	2.22
	15.0	7.9	2.00	8.9	2.04	9.4	2.05	10.1	2.08	10.8	2.10	11.1	2.11
	20.0	7.9	1.89	8.9	1.93	9.4	1.94	10.1	1.97	10.8	1.99	11.1	2.00
	25.0	7.9	2.29	8.9	2.33	9.4	2.35	10.1	2.38	10.8	2.40	11.1	2.42
	30.0	7.9	2.74	8.9	2.79	9.4	2.82	10.1	2.85	10.8	2.88	11.1	2.90
	35.0	7.9	3.18	8.9	3.24	9.4	3.26	10.1	3.30	10.8	3.34	11.1	3.35
	40.0	6.6	2.69	7.4	2.74	7.8	2.76	8.4	2.79	8.9	2.82	9.2	2.84
	46.0	5.2	2.20	5.9	2.24	6.2	2.25	6.6	2.28	7.1	2.31	7.3	2.32
44	-10.0	7.9	1.94	8.9	1.97	9.4	1.99	10.1	2.01	10.8	2.03	11.1	2.05
	0.0	7.9	2.02	8.9	2.05	9.4	2.07	10.1	2.09	10.8	2.11	11.1	2.13
	5.0	7.9	1.98	8.9	2.02	9.4	2.03	10.1	2.05	10.8	2.08	11.1	2.09
	10.0	7.9	2.11	8.9	2.14	9.4	2.16	10.1	2.19	10.8	2.21	11.1	2.22
	15.0	7.9	2.00	8.9	2.04	9.4	2.05	10.1	2.08	10.8	2.10	11.1	2.11
	20.0	7.9	1.89	8.9	1.93	9.4	1.94	10.1	1.97	10.8	1.99	11.1	2.00
	25.0	7.9	2.29	8.9	2.33	9.4	2.35	10.1	2.38	10.8	2.40	11.1	2.42
	30.0	7.9	2.74	8.9	2.79	9.4	2.82	10.1	2.85	10.8	2.88	11.1	2.90
	35.0	7.9	3.18	8.9	3.24	9.4	3.26	10.1	3.30	10.8	3.34	11.1	3.35
	40.0	6.6	2.69	7.4	2.74	7.8	2.76	8.4	2.79	8.9	2.82	9.2	2.84
	46.0	5.2	2.20	5.9	2.24	6.2	2.25	6.6	2.28	7.1	2.31	7.3	2.32
43	-10.0	7.9	1.94	8.9	1.97	9.4	1.99	10.1	2.01	10.8	2.03	11.1	2.05
	0.0	7.9	2.02	8.9	2.05	9.4	2.07	10.1	2.09	10.8	2.11	11.1	2.13
	5.0	7.9	1.98	8.9	2.02	9.4	2.03	10.1	2.05	10.8	2.08	11.1	2.09
	10.0	7.9	2.11	8.9	2.14	9.4	2.16	10.1	2.19	10.8	2.21	11.1	2.22
	15.0	7.9	2.00	8.9	2.04	9.4	2.05	10.1	2.08	10.8	2.10	11.1	2.11
	20.0	7.9	1.89	8.9	1.93	9.4	1.94	10.1	1.97	10.8	1.99	11.1	2.00
	25.0	7.9	2.29	8.9	2.33	9.4	2.35	10.1	2.38	10.8	2.40	11.1	2.42
	30.0	7.9	2.74	8.9	2.79	9.4	2.82	10.1	2.85	10.8	2.88	11.1	2.90
	35.0	7.9	3.18	8.9	3.24	9.4	3.26	10.1	3.30	10.8	3.34	11.1	3.35
	40.0	6.6	2.69	7.4	2.74	7.8	2.76	8.4	2.79	8.9	2.82	9.2	2.84
	46.0	5.2	2.20	5.9	2.24	6.2	2.25	6.6	2.28	7.1	2.31	7.3	2.32

Indoor unit connecting capacity	Outdoor temperature	Indoor temperature											
		18.0 °CDB		21.0 °CDB		23.0 °CDB		27.0 °CDB		29.0 °CDB		32.0 °CDB	
		12.0 °CWB		15.0 °CWB		16.0 °CWB		19.0 °CWB		21.0 °CWB		23.0 °CWB	
kBtu/h	°CDB	TC	IP	TC	IP	TC	IP	TC	IP	TC	IP	TC	IP
42	-10.0	7.9	1.94	8.9	1.97	9.4	1.99	10.1	2.01	10.8	2.03	11.1	2.05
	0.0	7.9	2.02	8.9	2.05	9.4	2.07	10.1	2.09	10.8	2.11	11.1	2.13
	5.0	7.9	1.98	8.9	2.02	9.4	2.03	10.1	2.05	10.8	2.08	11.1	2.09
	10.0	7.9	2.11	8.9	2.14	9.4	2.16	10.1	2.19	10.8	2.21	11.1	2.22
	15.0	7.9	2.00	8.9	2.04	9.4	2.05	10.1	2.08	10.8	2.10	11.1	2.11
	20.0	7.9	1.89	8.9	1.93	9.4	1.94	10.1	1.97	10.8	1.99	11.1	2.00
	25.0	7.9	2.29	8.9	2.33	9.4	2.35	10.1	2.38	10.8	2.40	11.1	2.42
	30.0	7.9	2.74	8.9	2.79	9.4	2.82	10.1	2.85	10.8	2.88	11.1	2.90
	35.0	7.9	3.18	8.9	3.24	9.4	3.26	10.1	3.30	10.8	3.34	11.1	3.35
	40.0	6.6	2.69	7.4	2.74	7.8	2.76	8.4	2.79	8.9	2.82	9.2	2.84
	46.0	5.2	2.20	5.9	2.24	6.2	2.25	6.6	2.28	7.1	2.31	7.3	2.32
41	-10.0	7.9	1.94	8.9	1.97	9.4	1.99	10.1	2.01	10.8	2.03	11.1	2.05
	0.0	7.9	2.02	8.9	2.05	9.4	2.07	10.1	2.09	10.8	2.11	11.1	2.13
	5.0	7.9	1.98	8.9	2.02	9.4	2.03	10.1	2.05	10.8	2.08	11.1	2.09
	10.0	7.9	2.11	8.9	2.14	9.4	2.16	10.1	2.19	10.8	2.21	11.1	2.22
	15.0	7.9	2.00	8.9	2.04	9.4	2.05	10.1	2.08	10.8	2.10	11.1	2.11
	20.0	7.9	1.89	8.9	1.93	9.4	1.94	10.1	1.97	10.8	1.99	11.1	2.00
	25.0	7.9	2.29	8.9	2.33	9.4	2.35	10.1	2.38	10.8	2.40	11.1	2.42
	30.0	7.9	2.74	8.9	2.79	9.4	2.82	10.1	2.85	10.8	2.88	11.1	2.90
	35.0	7.9	3.18	8.9	3.24	9.4	3.26	10.1	3.30	10.8	3.34	11.1	3.35
	40.0	6.6	2.69	7.4	2.74	7.8	2.76	8.4	2.79	8.9	2.82	9.2	2.84
	46.0	5.2	2.20	5.9	2.24	6.2	2.25	6.6	2.28	7.1	2.31	7.3	2.32
40	-10.0	7.9	1.94	8.9	1.97	9.4	1.99	10.1	2.01	10.8	2.03	11.1	2.05
	0.0	7.9	2.02	8.9	2.05	9.4	2.07	10.1	2.09	10.8	2.11	11.1	2.13
	5.0	7.9	1.98	8.9	2.02	9.4	2.03	10.1	2.05	10.8	2.08	11.1	2.09
	10.0	7.9	2.11	8.9	2.14	9.4	2.16	10.1	2.19	10.8	2.21	11.1	2.22
	15.0	7.9	2.00	8.9	2.04	9.4	2.05	10.1	2.08	10.8	2.10	11.1	2.11
	20.0	7.9	1.89	8.9	1.93	9.4	1.94	10.1	1.97	10.8	1.99	11.1	2.00
	25.0	7.9	2.29	8.9	2.33	9.4	2.35	10.1	2.38	10.8	2.40	11.1	2.42
	30.0	7.9	2.74	8.9	2.79	9.4	2.82	10.1	2.85	10.8	2.88	11.1	2.90
	35.0	7.9	3.18	8.9	3.24	9.4	3.26	10.1	3.30	10.8	3.34	11.1	3.35
	40.0	6.6	2.69	7.4	2.74	7.8	2.76	8.4	2.79	8.9	2.82	9.2	2.84
	46.0	5.2	2.20	5.9	2.24	6.2	2.25	6.6	2.28	7.1	2.31	7.3	2.32
39	-10.0	7.9	1.94	8.9	1.97	9.4	1.99	10.1	2.01	10.8	2.03	11.1	2.05
	0.0	7.9	2.02	8.9	2.05	9.4	2.07	10.1	2.09	10.8	2.11	11.1	2.13
	5.0	7.9	1.98	8.9	2.02	9.4	2.03	10.1	2.05	10.8	2.08	11.1	2.09
	10.0	7.9	2.11	8.9	2.14	9.4	2.16	10.1	2.19	10.8	2.21	11.1	2.22
	15.0	7.9	2.00	8.9	2.04	9.4	2.05	10.1	2.08	10.8	2.10	11.1	2.11
	20.0	7.9	1.89	8.9	1.93	9.4	1.94	10.1	1.97	10.8	1.99	11.1	2.00
	25.0	7.9	2.29	8.9	2.33	9.4	2.35	10.1	2.38	10.8	2.40	11.1	2.42
	30.0	7.9	2.74	8.9	2.79	9.4	2.82	10.1	2.85	10.8	2.88	11.1	2.90
	35.0	7.9	3.18	8.9	3.24	9.4	3.26	10.1	3.30	10.8	3.34	11.1	3.35
	40.0	6.6	2.69	7.4	2.74	7.8	2.76	8.4	2.79	8.9	2.82	9.2	2.84
	46.0	5.2	2.20	5.9	2.24	6.2	2.25	6.6	2.28	7.1	2.31	7.3	2.32
38	-10.0	7.9	1.94	8.9	1.97	9.4	1.99	10.1	2.01	10.8	2.03	11.1	2.05
	0.0	7.9	2.02	8.9	2.05	9.4	2.07	10.1	2.09	10.8	2.11	11.1	2.13
	5.0	7.9	1.98	8.9	2.02	9.4	2.03	10.1	2.05	10.8	2.08	11.1	2.09
	10.0	7.9	2.11	8.9	2.14	9.4	2.16	10.1	2.19	10.8	2.21	11.1	2.22
	15.0	7.9	2.00	8.9	2.04	9.4	2.05	10.1	2.08	10.8	2.10	11.1	2.11
	20.0	7.9	1.89	8.9	1.93	9.4	1.94	10.1	1.97	10.8	1.99	11.1	2.00
	25.0	7.9	2.29	8.9	2.33	9.4	2.35	10.1	2.38	10.8	2.40	11.1	2.42
	30.0	7.9	2.74	8.9	2.79	9.4	2.82	10.1	2.85	10.8	2.88	11.1	2.90
	35.0	7.9	3.18	8.9	3.24	9.4	3.26	10.1	3.30	10.8	3.34	11.1	3.35
	40.0	6.6	2.69	7.4	2.74	7.8	2.76	8.4	2.79	8.9	2.82	9.2	2.84
	46.0	5.2	2.20	5.9	2.24	6.2	2.25	6.6	2.28	7.1	2.31	7.3	2.32
37	-10.0	7.9	1.94	8.9	1.97	9.4	1.99	10.1	2.01	10.8	2.03	11.1	2.05
	0.0	7.9	2.02	8.9	2.05	9.4	2.07	10.1	2.09	10.8	2.11	11.1	2.13
	5.0	7.9	1.98	8.9	2.02	9.4	2.03	10.1	2.05	10.8	2.08	11.1	2.09
	10.0	7.9	2.11	8.9	2.14	9.4	2.16	10.1	2.19	10.8	2.21	11.1	2.22
	15.0	7.9	2.00	8.9	2.04	9.4	2.05	10.1	2.08	10.8	2.10	11.1	2.11
	20.0	7.9	1.89	8.9	1.93	9.4	1.94	10.1	1.97	10.8	1.99	11.1	2.00
	25.0	7.9	2.29	8.9	2.33	9.4	2.35	10.1	2.38	10.8	2.40	11.1	2.42
	30.0	7.9	2.74	8.9	2.79	9.4	2.82	10.1	2.85	10.8	2.88	11.1	2.90
	35.0	7.9	3.18	8.9	3.24	9.4	3.26	10.1	3.30	10.8	3.34	11.1	3.35
	40.0	6.6	2.69	7.4	2.74	7.8	2.76	8.4	2.79	8.9	2.82	9.2	2.84
	46.0	5.2	2.20	5.9	2.24	6.2	2.25	6.6	2.28	7.1	2.31	7.3	2.32
36	-10.0	7.9	1.94	8.9	1.97	9.4	1.99	10.1	2.01	10.8	2.03	11.1	2.05
	0.0	7.9	2.02	8.9	2.05	9.4	2.07	10.1	2.09	10.8	2.11	11.1	2.13
	5.0	7.9	1.98	8.9	2.02	9.4	2.03	10.1	2.05	10.8	2.08	11.1	2.09
	10.0	7.9	2.11	8.9	2.14	9.4	2.16	10.1	2.19	10.8	2.21	11.1	2.22
	15.0	7.9	2.00	8.9	2.04	9.4	2.05	10.1	2.08	10.8	2.10	11.1	2.11
	20.0	7.9	1.89	8.9	1.93	9.4	1.94	10.1	1.97	10.8	1.99	11.1	2.00
	25.0	7.9	2.29	8.9	2.33	9.4	2.35	10.1	2.38	10.8	2.40	11.1	2.42
	30.0	7.9	2.74	8.9	2.79	9.4	2.82	10.1	2.85	10.8	2.88	11.1	2.90
	35.0	7.9	3.18	8.9	3.24	9.4	3.26	10.1	3.30	10.8	3.34	11.1	3.35
	40.0	6.6	2.69	7.4	2.74	7.8	2.76	8.4	2.79	8.9	2.82	9.2	2.84
	46.0	5.2	2.20	5.9	2.24	6.2	2.25	6.6	2.28	7.1	2.31	7.3	2.32
35	-10.0	7.9	1.94	8.9	1.97	9.4	1.99	10.1	2.01	10.8	2.03	11.1	2.05
	0.0	7.9	2.02	8.9	2.05	9.4	2.07	10.1	2.09	10.8	2.11	11.1	2.13
	5.0	7.9	1.98	8.9	2.02	9.4	2.03	10.1	2.05	10.8	2.08	11.1	2.09
	10.0	7.9	2.11	8.9	2.14	9.4	2.16	10.1	2.19	10.8	2.21	11.1	2.22
	15.0	7.9	2.00	8.9	2.04	9.4	2.05	10.1	2.08	10.8	2.10	11.1	2.11
	20.0	7.9	1.89	8.9	1.93	9.4	1.94	10.1	1.97	10.8	1.99	11.1	2.00
	25.0	7.9	2.29	8.9	2.33	9.4	2.35	10.1	2.38	10.8	2.40	11.1	2.42
	30.0	7.9	2.74	8.9	2.79	9.4	2.82	10.1	2.85	10.8	2.88	11.1	2.90
	35.0	7.9	3.18	8.9	3.24	9.4	3.26	10.1	3.30	10.8	3.34	11.1	3.35
	40.0	6.6	2.69	7.4	2.74	7.8	2.76	8.4	2.79	8.9	2.82	9.2	2.84
	46.0	5.2	2.20	5.9	2.24	6.2	2.25	6.6	2.28	7.1	2.31	7.3	2.32

OUTDOOR UNIT
AOEG30KBTA4

Indoor unit connecting capacity	Outdoor temperature	Indoor temperature											
		18.0 °CDB		21.0 °CDB		23.0 °CDB		27.0 °CDB		29.0 °CDB		32.0 °CDB	
		12.0 °CWB		15.0 °CWB		16.0 °CWB		19.0 °CWB		21.0 °CWB		23.0 °CWB	
kBtu/h	°CDB	TC	IP	TC	IP	TC	IP	TC	IP	TC	IP	TC	IP
34	-10.0	7.9	1.94	8.9	1.97	9.4	1.99	10.1	2.01	10.8	2.03	11.1	2.05
	0.0	7.9	2.02	8.9	2.05	9.4	2.07	10.1	2.09	10.8	2.11	11.1	2.13
	5.0	7.9	1.98	8.9	2.02	9.4	2.03	10.1	2.05	10.8	2.08	11.1	2.09
	10.0	7.9	2.11	8.9	2.14	9.4	2.16	10.1	2.19	10.8	2.21	11.1	2.22
	15.0	7.9	2.00	8.9	2.04	9.4	2.05	10.1	2.08	10.8	2.10	11.1	2.11
	20.0	7.9	1.89	8.9	1.93	9.4	1.94	10.1	1.97	10.8	1.99	11.1	2.00
	25.0	7.9	2.29	8.9	2.33	9.4	2.35	10.1	2.38	10.8	2.40	11.1	2.42
	30.0	7.9	2.74	8.9	2.79	9.4	2.82	10.1	2.85	10.8	2.88	11.1	2.90
	35.0	7.9	3.18	8.9	3.24	9.4	3.26	10.1	3.30	10.8	3.34	11.1	3.35
	40.0	6.6	2.69	7.4	2.74	7.8	2.76	8.4	2.79	8.9	2.82	9.2	2.84
	46.0	5.2	2.20	5.9	2.24	6.2	2.25	6.6	2.28	7.1	2.31	7.3	2.32
33	-10.0	7.9	1.94	8.9	1.97	9.4	1.99	10.1	2.01	10.8	2.03	11.1	2.05
	0.0	7.9	2.02	8.9	2.05	9.4	2.07	10.1	2.09	10.8	2.11	11.1	2.13
	5.0	7.9	1.98	8.9	2.02	9.4	2.03	10.1	2.05	10.8	2.08	11.1	2.09
	10.0	7.9	2.11	8.9	2.14	9.4	2.16	10.1	2.19	10.8	2.21	11.1	2.22
	15.0	7.9	2.00	8.9	2.04	9.4	2.05	10.1	2.08	10.8	2.10	11.1	2.11
	20.0	7.9	1.89	8.9	1.93	9.4	1.94	10.1	1.97	10.8	1.99	11.1	2.00
	25.0	7.9	2.29	8.9	2.33	9.4	2.35	10.1	2.38	10.8	2.40	11.1	2.42
	30.0	7.9	2.74	8.9	2.79	9.4	2.82	10.1	2.85	10.8	2.88	11.1	2.90
	35.0	7.9	3.18	8.9	3.24	9.4	3.26	10.1	3.30	10.8	3.34	11.1	3.35
	40.0	6.6	2.69	7.4	2.74	7.8	2.76	8.4	2.79	8.9	2.82	9.2	2.84
	46.0	5.2	2.20	5.9	2.24	6.2	2.25	6.6	2.28	7.1	2.31	7.3	2.32
32	-10.0	7.9	1.94	8.9	1.97	9.4	1.99	10.1	2.01	10.8	2.03	11.1	2.05
	0.0	7.9	2.02	8.9	2.05	9.4	2.07	10.1	2.09	10.8	2.11	11.1	2.13
	5.0	7.9	1.98	8.9	2.02	9.4	2.03	10.1	2.05	10.8	2.08	11.1	2.09
	10.0	7.9	2.11	8.9	2.14	9.4	2.16	10.1	2.19	10.8	2.21	11.1	2.22
	15.0	7.9	2.00	8.9	2.04	9.4	2.05	10.1	2.08	10.8	2.10	11.1	2.11
	20.0	7.9	1.89	8.9	1.93	9.4	1.94	10.1	1.97	10.8	1.99	11.1	2.00
	25.0	7.9	2.29	8.9	2.33	9.4	2.35	10.1	2.38	10.8	2.40	11.1	2.42
	30.0	7.9	2.74	8.9	2.79	9.4	2.82	10.1	2.85	10.8	2.88	11.1	2.90
	35.0	7.9	3.18	8.9	3.24	9.4	3.26	10.1	3.30	10.8	3.34	11.1	3.35
	40.0	6.6	2.69	7.4	2.74	7.8	2.76	8.4	2.79	8.9	2.82	9.2	2.84
	46.0	5.2	2.20	5.9	2.24	6.2	2.25	6.6	2.28	7.1	2.31	7.3	2.32
31	-10.0	7.9	1.94	8.9	1.97	9.4	1.99	10.1	2.01	10.8	2.03	11.1	2.05
	0.0	7.9	2.02	8.9	2.05	9.4	2.07	10.1	2.09	10.8	2.11	11.1	2.13
	5.0	7.9	1.98	8.9	2.02	9.4	2.03	10.1	2.05	10.8	2.08	11.1	2.09
	10.0	7.9	2.11	8.9	2.14	9.4	2.16	10.1	2.19	10.8	2.21	11.1	2.22
	15.0	7.9	2.00	8.9	2.04	9.4	2.05	10.1	2.08	10.8	2.10	11.1	2.11
	20.0	7.9	1.89	8.9	1.93	9.4	1.94	10.1	1.97	10.8	1.99	11.1	2.00
	25.0	7.9	2.29	8.9	2.33	9.4	2.35	10.1	2.38	10.8	2.40	11.1	2.42
	30.0	7.9	2.74	8.9	2.79	9.4	2.82	10.1	2.85	10.8	2.88	11.1	2.90
	35.0	7.9	3.18	8.9	3.24	9.4	3.26	10.1	3.30	10.8	3.34	11.1	3.35
	40.0	6.6	2.69	7.4	2.74	7.8	2.76	8.4	2.79	8.9	2.82	9.2	2.84
	46.0	5.2	2.20	5.9	2.24	6.2	2.25	6.6	2.28	7.1	2.31	7.3	2.32
30	-10.0	7.9	1.94	8.9	1.97	9.4	1.99	10.1	2.01	10.8	2.03	11.1	2.05
	0.0	7.9	2.02	8.9	2.05	9.4	2.07	10.1	2.09	10.8	2.11	11.1	2.13
	5.0	7.9	1.98	8.9	2.02	9.4	2.03	10.1	2.05	10.8	2.08	11.1	2.09
	10.0	7.9	2.11	8.9	2.14	9.4	2.16	10.1	2.19	10.8	2.21	11.1	2.22
	15.0	7.9	2.00	8.9	2.04	9.4	2.05	10.1	2.08	10.8	2.10	11.1	2.11
	20.0	7.9	1.89	8.9	1.93	9.4	1.94	10.1	1.97	10.8	1.99	11.1	2.00
	25.0	7.9	2.29	8.9	2.33	9.4	2.35	10.1	2.38	10.8	2.40	11.1	2.42
	30.0	7.9	2.74	8.9	2.79	9.4	2.82	10.1	2.85	10.8	2.88	11.1	2.90
	35.0	7.9	3.18	8.9	3.24	9.4	3.26	10.1	3.30	10.8	3.34	11.1	3.35
	40.0	6.6	2.69	7.4	2.74	7.8	2.76	8.4	2.79	8.9	2.82	9.2	2.84
	46.0	5.2	2.20	5.9	2.24	6.2	2.25	6.6	2.28	7.1	2.31	7.3	2.32
29	-10.0	7.9	1.94	8.9	1.97	9.4	1.99	10.1	2.01	10.8	2.03	11.1	2.05
	0.0	7.9	2.02	8.9	2.05	9.4	2.07	10.1	2.09	10.8	2.11	11.1	2.13
	5.0	7.9	1.98	8.9	2.02	9.4	2.03	10.1	2.05	10.8	2.08	11.1	2.09
	10.0	7.9	2.11	8.9	2.14	9.4	2.16	10.1	2.19	10.8	2.21	11.1	2.22
	15.0	7.9	2.00	8.9	2.04	9.4	2.05	10.1	2.08	10.8	2.10	11.1	2.11
	20.0	7.9	1.89	8.9	1.93	9.4	1.94	10.1	1.97	10.8	1.99	11.1	2.00
	25.0	7.9	2.29	8.9	2.33	9.4	2.35	10.1	2.38	10.8	2.40	11.1	2.42
	30.0	7.9	2.74	8.9	2.79	9.4	2.82	10.1	2.85	10.8	2.88	11.1	2.90
	35.0	7.9	3.18	8.9	3.24	9.4	3.26	10.1	3.30	10.8	3.34	11.1	3.35
	40.0	6.6	2.69	7.4	2.74	7.8	2.76	8.4	2.79	8.9	2.82	9.2	2.84
	46.0	5.2	2.20	5.9	2.24	6.2	2.25	6.6	2.28	7.1	2.31	7.3	2.32
28	-10.0	7.9	1.94	8.9	1.97	9.4	1.99	10.1	2.01	10.8	2.03	11.1	2.05
	0.0	7.9	2.02	8.9	2.05	9.4	2.07	10.1	2.09	10.8	2.11	11.1	2.13
	5.0	7.9	1.98	8.9	2.02	9.4	2.03	10.1	2.05	10.8	2.08	11.1	2.09
	10.0	7.9	2.11	8.9	2.14	9.4	2.16	10.1	2.19	10.8	2.21	11.1	2.22
	15.0	7.9	2.00	8.9	2.04	9.4	2.05	10.1	2.08	10.8	2.10	11.1	2.11
	20.0	7.9	1.89	8.9	1.93	9.4	1.94	10.1	1.97	10.8	1.99	11.1	2.00
	25.0	7.9	2.29	8.9	2.33	9.4	2.35	10.1	2.38	10.8	2.40	11.1	2.42
	30.0	7.9	2.74	8.9	2.79	9.4	2.82	10.1	2.85	10.8	2.88	11.1	2.90
	35.0	7.9	3.18	8.9	3.24	9.4	3.26	10.1	3.30	10.8	3.34	11.1	3.35
	40.0	6.6	2.69	7.4	2.74	7.8	2.76	8.4	2.79	8.9	2.82	9.2	2.84
	46.0	5.2	2.20	5.9	2.24	6.2	2.25	6.6	2.28	7.1	2.31	7.3	2.32
27	-10.0	7.5	1.77	8.5	1.80	9.0	1.81	9.6	1.83	10.3	1.85	10.6	1.86
	0.0	7.5	1.84	8.5	1.87	9.0	1.88	9.6	1.90	10.3	1.93	10.6	1.94
	5.0	7.5	1.80	8.5	1.84	9.0	1.85	9.6	1.87	10.3	1.89	10.6	1.90
	10.0	7.5	1.92	8.5	1.95	9.0	1.97	9.6	1.99	10.3	2.01	10.6	2.03
	15.0	7.5	1.82	8.5	1.86	9.0	1.87	9.6	1.89	10.3	1.91	10.6	1.92
	20.0	7.5	1.73	8.5	1.76	9.0	1.77	9.6	1.79	10.3	1.81	10.6	1.82
	25.0	7.5	2.09	8.5	2.12	9.0	2.14	9.6	2.17	10.3	2.19	10.6	2.20
	30.0	7.5	2.50	8.5	2.54	9.0	2.57	9.6	2.59	10.3	2.62	10.6	2.64
	35.0	7.5	2.90	8.5	2.95	9.0	2.97	9.6	3.00	10.3	3.04	10.6	3.06
	40.0	6.2	2.45	7.0	2.49	7.4	2.51	7.9	2.54	8.5	2.57	8.8	2.58
	46.0	6.2	2.00	7.0	2.04	7.4	2.05	7.9	2.08	8.5	2.10	8.8	2.11

OUTDOOR UNIT
AOEG30KBTA4

Indoor unit connecting capacity	Outdoor temperature	Indoor temperature											
		18.0 °CDB		21.0 °CDB		23.0 °CDB		27.0 °CDB		29.0 °CDB		32.0 °CDB	
		12.0 °CWB		15.0 °CWB		16.0 °CWB		19.0 °CWB		21.0 °CWB		23.0 °CWB	
kBtu/h	°CDB	TC	IP	TC	IP	TC	IP	TC	IP	TC	IP	TC	IP
26	-10.0	7.3	1.71	8.2	1.74	8.7	1.76	9.3	1.78	9.9	1.80	10.2	1.81
	0.0	7.3	1.78	8.2	1.81	8.7	1.83	9.3	1.85	9.9	1.87	10.2	1.88
	5.0	7.3	1.75	8.2	1.78	8.7	1.79	9.3	1.81	9.9	1.84	10.2	1.84
	10.0	7.3	1.86	8.2	1.89	8.7	1.91	9.3	1.93	9.9	1.95	10.2	1.96
	15.0	7.3	1.77	8.2	1.80	8.7	1.81	9.3	1.83	9.9	1.86	10.2	1.87
	20.0	7.3	1.67	8.2	1.70	8.7	1.72	9.3	1.74	9.9	1.76	10.2	1.76
	25.0	7.3	2.02	8.2	2.06	8.7	2.08	9.3	2.10	9.9	2.12	10.2	2.13
	30.0	7.3	2.42	8.2	2.47	8.7	2.49	9.3	2.51	9.9	2.54	10.2	2.56
	35.0	7.3	2.81	8.2	2.86	8.7	2.88	9.3	2.91	9.9	2.95	10.2	2.96
	40.0	6.0	2.37	6.8	2.42	7.2	2.44	7.7	2.46	8.2	2.49	8.5	2.50
	46.0	6.0	1.94	6.8	1.97	7.2	1.99	7.7	2.01	8.2	2.04	8.5	2.05
25	-10.0	7.0	1.64	7.9	1.67	8.3	1.68	8.9	1.70	9.5	1.72	9.8	1.73
	0.0	7.0	1.70	7.9	1.73	8.3	1.75	8.9	1.77	9.5	1.79	9.8	1.80
	5.0	7.0	1.67	7.9	1.70	8.3	1.72	8.9	1.74	9.5	1.76	9.8	1.77
	10.0	7.0	1.78	7.9	1.81	8.3	1.83	8.9	1.85	9.5	1.87	9.8	1.88
	15.0	7.0	1.69	7.9	1.72	8.3	1.74	8.9	1.76	9.5	1.78	9.8	1.79
	20.0	7.0	1.60	7.9	1.63	8.3	1.64	8.9	1.66	9.5	1.68	9.8	1.69
	25.0	7.0	1.94	7.9	1.97	8.3	1.99	8.9	2.01	9.5	2.03	9.8	2.04
	30.0	7.0	2.32	7.9	2.36	8.3	2.38	8.9	2.41	9.5	2.44	9.8	2.45
	35.0	7.0	2.69	7.9	2.74	8.3	2.76	8.9	2.79	9.5	2.82	9.8	2.84
	40.0	5.8	2.27	6.5	2.31	6.9	2.33	7.4	2.36	7.9	2.39	8.1	2.40
	46.0	5.8	1.86	6.5	1.89	6.9	1.91	7.4	1.93	7.9	1.95	8.1	1.96

NOTES:

- TC: Total Capacity (kW), IP: Input Power (kW)
- Values mentioned in the table are based on the following conditions:
  - Power source of specifications: 230 V
  - Pipe length: 5 m, Height difference: 0 m (Outdoor unit—Indoor unit)
- 2 or more indoor units should be connected.
- The total ability of connected indoor unit is from 25,000 Btu/h up to 49,000 Btu/h.
- Input in the table are calculated based on the maximum indoor unit input combinations.

● Compact cassette type

Model: AUXG07KVLA

Outdoor temperature	Indoor temperature (°CDB / °CWB)											
	18.0 / 12.0		21.0 / 15.0		23.0 / 16.0		27.0 / 19.0		29.0 / 21.0		32.0 / 23.0	
(°CDB)	TC	SHC	TC	SHC	TC	SHC	TC	SHC	TC	SHC	TC	SHC
-10.0	1.96	1.32	2.22	1.51	2.34	1.74	2.50	1.95	2.67	2.13	2.76	2.44
-5.0	1.96	1.32	2.22	1.51	2.34	1.74	2.50	1.95	2.67	2.13	2.76	2.44
0.0	1.96	1.32	2.22	1.51	2.34	1.74	2.50	1.95	2.67	2.13	2.76	2.44
5.0	1.96	1.32	2.22	1.51	2.34	1.74	2.50	1.95	2.67	2.13	2.76	2.44
10.0	1.96	1.32	2.22	1.51	2.34	1.74	2.50	1.95	2.67	2.13	2.76	2.44
15.0	1.96	1.32	2.22	1.51	2.34	1.74	2.50	1.95	2.67	2.13	2.76	2.44
20.0	1.96	1.32	2.22	1.51	2.34	1.74	2.50	1.95	2.67	2.13	2.76	2.44
25.0	1.96	1.32	2.22	1.51	2.34	1.74	2.50	1.95	2.67	2.13	2.76	2.44
30.0	1.96	1.32	2.22	1.51	2.34	1.74	2.50	1.95	2.67	2.13	2.76	2.44
35.0	1.96	1.32	2.22	1.51	2.34	1.74	2.50	1.95	2.67	2.13	2.76	2.44
40.0	1.62	0.91	1.83	1.03	1.93	1.19	2.07	1.34	2.21	1.46	2.28	1.67
46.0	1.28	0.57	1.45	0.65	1.53	0.75	1.64	0.84	1.75	0.92	1.81	1.05

Model: AUXG09KVLA

Outdoor temperature	Indoor temperature (°CDB / °CWB)											
	18.0 / 12.0		21.0 / 15.0		23.0 / 16.0		27.0 / 19.0		29.0 / 21.0		32.0 / 23.0	
(°CDB)	TC	SHC	TC	SHC	TC	SHC	TC	SHC	TC	SHC	TC	SHC
-10.0	2.51	1.67	2.84	1.90	2.99	2.19	3.20	2.46	3.42	2.69	3.53	3.09
-5.0	2.51	1.67	2.84	1.90	2.99	2.19	3.20	2.46	3.42	2.69	3.53	3.09
0.0	2.51	1.67	2.84	1.90	2.99	2.19	3.20	2.46	3.42	2.69	3.53	3.09
5.0	2.51	1.67	2.84	1.90	2.99	2.19	3.20	2.46	3.42	2.69	3.53	3.09
10.0	2.51	1.67	2.84	1.90	2.99	2.19	3.20	2.46	3.42	2.69	3.53	3.09
15.0	2.51	1.67	2.84	1.90	2.99	2.19	3.20	2.46	3.42	2.69	3.53	3.09
20.0	2.51	1.67	2.84	1.90	2.99	2.19	3.20	2.46	3.42	2.69	3.53	3.09
25.0	2.51	1.67	2.84	1.90	2.99	2.19	3.20	2.46	3.42	2.69	3.53	3.09
30.0	2.51	1.67	2.84	1.90	2.99	2.19	3.20	2.46	3.42	2.69	3.53	3.09
35.0	2.51	1.67	2.84	1.90	2.99	2.19	3.20	2.46	3.42	2.69	3.53	3.09
40.0	2.08	1.14	2.35	1.30	2.47	1.50	2.65	1.69	2.83	1.85	2.92	2.11
46.0	1.64	0.72	1.86	0.82	1.96	0.94	2.10	1.06	2.24	1.16	2.31	1.33

Model: AUXG12KVLA

Outdoor temperature	Indoor temperature (°CDB / °CWB)											
	18.0 / 12.0		21.0 / 15.0		23.0 / 16.0		27.0 / 19.0		29.0 / 21.0		32.0 / 23.0	
(°CDB)	TC	SHC	TC	SHC	TC	SHC	TC	SHC	TC	SHC	TC	SHC
-10.0	3.37	2.22	3.81	2.53	4.02	2.91	4.30	3.27	4.60	3.57	4.74	4.10
-5.0	3.37	2.22	3.81	2.53	4.02	2.91	4.30	3.27	4.60	3.57	4.74	4.10
0.0	3.37	2.22	3.81	2.53	4.02	2.91	4.30	3.27	4.60	3.57	4.74	4.10
5.0	3.37	2.22	3.81	2.53	4.02	2.91	4.30	3.27	4.60	3.57	4.74	4.10
10.0	3.37	2.22	3.81	2.53	4.02	2.91	4.30	3.27	4.60	3.57	4.74	4.10
15.0	3.37	2.22	3.81	2.53	4.02	2.91	4.30	3.27	4.60	3.57	4.74	4.10
20.0	3.37	2.22	3.81	2.53	4.02	2.91	4.30	3.27	4.60	3.57	4.74	4.10
25.0	3.37	2.22	3.81	2.53	4.02	2.91	4.30	3.27	4.60	3.57	4.74	4.10
30.0	3.37	2.22	3.81	2.53	4.02	2.91	4.30	3.27	4.60	3.57	4.74	4.10
35.0	3.37	2.22	3.81	2.53	4.02	2.91	4.30	3.27	4.60	3.57	4.74	4.10
40.0	2.79	1.52	3.15	1.73	3.32	1.99	3.56	2.24	3.80	2.45	3.92	2.81
46.0	2.21	0.95	2.50	1.08	2.63	1.25	2.82	1.40	3.01	1.53	3.11	1.76

Model: AUXG14KVLA

Outdoor temperature	Indoor temperature (°CDB / °CWB)											
	18.0 / 12.0		21.0 / 15.0		23.0 / 16.0		27.0 / 19.0		29.0 / 21.0		32.0 / 23.0	
(°CDB)	TC	SHC	TC	SHC	TC	SHC	TC	SHC	TC	SHC	TC	SHC
-10.0	3.92	2.44	4.43	2.78	4.67	3.20	5.00	3.60	5.35	3.94	5.51	4.51
-5.0	3.92	2.44	4.43	2.78	4.67	3.20	5.00	3.60	5.35	3.94	5.51	4.51
0.0	3.92	2.44	4.43	2.78	4.67	3.20	5.00	3.60	5.35	3.94	5.51	4.51
5.0	3.92	2.44	4.43	2.78	4.67	3.20	5.00	3.60	5.35	3.94	5.51	4.51
10.0	3.92	2.44	4.43	2.78	4.67	3.20	5.00	3.60	5.35	3.94	5.51	4.51
15.0	3.92	2.44	4.43	2.78	4.67	3.20	5.00	3.60	5.35	3.94	5.51	4.51
20.0	3.92	2.44	4.43	2.78	4.67	3.20	5.00	3.60	5.35	3.94	5.51	4.51
25.0	3.92	2.44	4.43	2.78	4.67	3.20	5.00	3.60	5.35	3.94	5.51	4.51
30.0	3.92	2.44	4.43	2.78	4.67	3.20	5.00	3.60	5.35	3.94	5.51	4.51
35.0	3.92	2.44	4.43	2.78	4.67	3.20	5.00	3.60	5.35	3.94	5.51	4.51
40.0	3.24	1.67	3.67	1.91	3.87	2.19	4.14	2.47	4.42	2.70	4.56	3.09
46.0	2.57	1.05	2.90	1.20	3.06	1.38	3.28	1.55	3.50	1.69	3.61	1.94

Model: AUXG18KVLA

Outdoor temperature	Indoor temperature (°CDB / °CWB)											
	18.0 / 12.0		21.0 / 15.0		23.0 / 16.0		27.0 / 19.0		29.0 / 21.0		32.0 / 23.0	
(°CDB)	TC	SHC	TC	SHC	TC	SHC	TC	SHC	TC	SHC	TC	SHC
-10.0	4.75	2.88	5.37	3.28	5.66	3.78	6.06	4.24	6.48	4.64	6.68	5.32
-5.0	4.75	2.88	5.37	3.28	5.66	3.78	6.06	4.24	6.48	4.64	6.68	5.32
0.0	4.75	2.88	5.37	3.28	5.66	3.78	6.06	4.24	6.48	4.64	6.68	5.32
5.0	4.75	2.88	5.37	3.28	5.66	3.78	6.06	4.24	6.48	4.64	6.68	5.32
10.0	4.75	2.88	5.37	3.28	5.66	3.78	6.06	4.24	6.48	4.64	6.68	5.32
15.0	4.75	2.88	5.37	3.28	5.66	3.78	6.06	4.24	6.48	4.64	6.68	5.32
20.0	4.75	2.88	5.37	3.28	5.66	3.78	6.06	4.24	6.48	4.64	6.68	5.32
25.0	4.75	2.88	5.37	3.28	5.66	3.78	6.06	4.24	6.48	4.64	6.68	5.32
30.0	4.75	2.88	5.37	3.28	5.66	3.78	6.06	4.24	6.48	4.64	6.68	5.32
35.0	4.75	2.88	5.37	3.28	5.66	3.78	6.06	4.24	6.48	4.64	6.68	5.32
40.0	3.93	1.97	4.44	2.25	4.68	2.59	5.02	2.91	5.36	3.18	5.53	3.64
46.0	3.11	1.24	3.52	1.41	3.71	1.62	3.97	1.82	4.25	1.99	4.38	2.28

Model: AUXG22KVLA

Outdoor temperature	Indoor temperature (°CDB / °CWB)											
	18.0 / 12.0		21.0 / 15.0		23.0 / 16.0		27.0 / 19.0		29.0 / 21.0		32.0 / 23.0	
(°CDB)	TC	SHC	TC	SHC	TC	SHC	TC	SHC	TC	SHC	TC	SHC
-10.0	6.01	3.65	6.79	4.16	7.15	4.80	7.66	5.39	8.19	5.89	8.44	6.75
-5.0	6.01	3.65	6.79	4.16	7.15	4.80	7.66	5.39	8.19	5.89	8.44	6.75
0.0	6.01	3.65	6.79	4.16	7.15	4.80	7.66	5.39	8.19	5.89	8.44	6.75
5.0	6.01	3.65	6.79	4.16	7.15	4.80	7.66	5.39	8.19	5.89	8.44	6.75
10.0	6.01	3.65	6.79	4.16	7.15	4.80	7.66	5.39	8.19	5.89	8.44	6.75
15.0	6.01	3.65	6.79	4.16	7.15	4.80	7.66	5.39	8.19	5.89	8.44	6.75
20.0	6.01	3.65	6.79	4.16	7.15	4.80	7.66	5.39	8.19	5.89	8.44	6.75
25.0	6.01	3.65	6.79	4.16	7.15	4.80	7.66	5.39	8.19	5.89	8.44	6.75
30.0	6.01	3.65	6.79	4.16	7.15	4.80	7.66	5.39	8.19	5.89	8.44	6.75
35.0	6.01	3.65	6.79	4.16	7.15	4.80	7.66	5.39	8.19	5.89	8.44	6.75
40.0	4.97	2.50	5.62	2.85	5.92	3.28	6.34	3.69	6.78	4.04	6.99	4.62
46.0	3.94	1.57	4.45	1.79	4.69	2.06	5.02	2.31	5.37	2.53	5.53	2.90

NOTES:

- TC: Total Capacity (kW), SHC: Sensible Heat Capacity (kW)
- Values mentioned in the table are based on the following conditions:
  - Pipe length: 5 m, Height difference: 0 m (Outdoor unit—Indoor unit)

● Mini duct type

Model: ARXG07KSLAP

Outdoor temperature	Indoor temperature (°CDB / °CWB)											
	18.0 / 12.0		21.0 / 15.0		23.0 / 16.0		27.0 / 19.0		29.0 / 21.0		32.0 / 23.0	
(°CDB)	TC	SHC	TC	SHC	TC	SHC	TC	SHC	TC	SHC	TC	SHC
-10.0	1.96	1.36	2.22	1.55	2.34	1.78	2.50	2.00	2.67	2.19	2.76	2.51
-5.0	1.96	1.36	2.22	1.55	2.34	1.78	2.50	2.00	2.67	2.19	2.76	2.51
0.0	1.96	1.36	2.22	1.55	2.34	1.78	2.50	2.00	2.67	2.19	2.76	2.51
5.0	1.96	1.36	2.22	1.55	2.34	1.78	2.50	2.00	2.67	2.19	2.76	2.51
10.0	1.96	1.36	2.22	1.55	2.34	1.78	2.50	2.00	2.67	2.19	2.76	2.51
15.0	1.96	1.36	2.22	1.55	2.34	1.78	2.50	2.00	2.67	2.19	2.76	2.51
20.0	1.96	1.36	2.22	1.55	2.34	1.78	2.50	2.00	2.67	2.19	2.76	2.51
25.0	1.96	1.36	2.22	1.55	2.34	1.78	2.50	2.00	2.67	2.19	2.76	2.51
30.0	1.96	1.36	2.22	1.55	2.34	1.78	2.50	2.00	2.67	2.19	2.76	2.51
35.0	1.96	1.36	2.22	1.55	2.34	1.78	2.50	2.00	2.67	2.19	2.76	2.51
40.0	1.62	0.93	1.83	1.06	1.93	1.22	2.07	1.37	2.21	1.50	2.28	1.72
46.0	1.28	0.58	1.45	0.66	1.53	0.76	1.64	0.86	1.75	0.94	1.81	1.08

Model: ARXG09KSLAP

Outdoor temperature	Indoor temperature (°CDB / °CWB)											
	18.0 / 12.0		21.0 / 15.0		23.0 / 16.0		27.0 / 19.0		29.0 / 21.0		32.0 / 23.0	
(°CDB)	TC	SHC	TC	SHC	TC	SHC	TC	SHC	TC	SHC	TC	SHC
-10.0	2.51	1.61	2.84	1.83	2.99	2.11	3.20	2.37	3.42	2.59	3.53	2.97
-5.0	2.51	1.61	2.84	1.83	2.99	2.11	3.20	2.37	3.42	2.59	3.53	2.97
0.0	2.51	1.61	2.84	1.83	2.99	2.11	3.20	2.37	3.42	2.59	3.53	2.97
5.0	2.51	1.61	2.84	1.83	2.99	2.11	3.20	2.37	3.42	2.59	3.53	2.97
10.0	2.51	1.61	2.84	1.83	2.99	2.11	3.20	2.37	3.42	2.59	3.53	2.97
15.0	2.51	1.61	2.84	1.83	2.99	2.11	3.20	2.37	3.42	2.59	3.53	2.97
20.0	2.51	1.61	2.84	1.83	2.99	2.11	3.20	2.37	3.42	2.59	3.53	2.97
25.0	2.51	1.61	2.84	1.83	2.99	2.11	3.20	2.37	3.42	2.59	3.53	2.97
30.0	2.51	1.61	2.84	1.83	2.99	2.11	3.20	2.37	3.42	2.59	3.53	2.97
35.0	2.51	1.61	2.84	1.83	2.99	2.11	3.20	2.37	3.42	2.59	3.53	2.97
40.0	2.08	1.10	2.35	1.25	2.47	1.44	2.65	1.62	2.83	1.77	2.92	2.03
46.0	1.64	0.69	1.86	0.79	1.96	0.91	2.10	1.02	2.24	1.11	2.31	1.27

Model: ARXG12KSLAP

Outdoor temperature	Indoor temperature (°CDB / °CWB)											
	18.0 / 12.0		21.0 / 15.0		23.0 / 16.0		27.0 / 19.0		29.0 / 21.0		32.0 / 23.0	
(°CDB)	TC	SHC	TC	SHC	TC	SHC	TC	SHC	TC	SHC	TC	SHC
-10.0	3.37	2.16	3.81	2.46	4.02	2.83	4.30	3.18	4.60	3.48	4.74	3.99
-5.0	3.37	2.16	3.81	2.46	4.02	2.83	4.30	3.18	4.60	3.48	4.74	3.99
0.0	3.37	2.16	3.81	2.46	4.02	2.83	4.30	3.18	4.60	3.48	4.74	3.99
5.0	3.37	2.16	3.81	2.46	4.02	2.83	4.30	3.18	4.60	3.48	4.74	3.99
10.0	3.37	2.16	3.81	2.46	4.02	2.83	4.30	3.18	4.60	3.48	4.74	3.99
15.0	3.37	2.16	3.81	2.46	4.02	2.83	4.30	3.18	4.60	3.48	4.74	3.99
20.0	3.37	2.16	3.81	2.46	4.02	2.83	4.30	3.18	4.60	3.48	4.74	3.99
25.0	3.37	2.16	3.81	2.46	4.02	2.83	4.30	3.18	4.60	3.48	4.74	3.99
30.0	3.37	2.16	3.81	2.46	4.02	2.83	4.30	3.18	4.60	3.48	4.74	3.99
35.0	3.37	2.16	3.81	2.46	4.02	2.83	4.30	3.18	4.60	3.48	4.74	3.99
40.0	2.79	1.48	3.15	1.69	3.32	1.94	3.56	2.18	3.80	2.38	3.92	2.73
46.0	2.21	0.93	2.50	1.06	2.63	1.22	2.82	1.37	3.01	1.49	3.11	1.71

Model: ARXG14KSLAP

Outdoor temperature	Indoor temperature (°CDB / °CWB)											
	18.0 / 12.0		21.0 / 15.0		23.0 / 16.0		27.0 / 19.0		29.0 / 21.0		32.0 / 23.0	
(°CDB)	TC	SHC	TC	SHC	TC	SHC	TC	SHC	TC	SHC	TC	SHC
-10.0	3.92	2.41	4.43	2.74	4.67	3.16	5.00	3.55	5.35	3.88	5.51	4.45
-5.0	3.92	2.41	4.43	2.74	4.67	3.16	5.00	3.55	5.35	3.88	5.51	4.45
0.0	3.92	2.41	4.43	2.74	4.67	3.16	5.00	3.55	5.35	3.88	5.51	4.45
5.0	3.92	2.41	4.43	2.74	4.67	3.16	5.00	3.55	5.35	3.88	5.51	4.45
10.0	3.92	2.41	4.43	2.74	4.67	3.16	5.00	3.55	5.35	3.88	5.51	4.45
15.0	3.92	2.41	4.43	2.74	4.67	3.16	5.00	3.55	5.35	3.88	5.51	4.45
20.0	3.92	2.41	4.43	2.74	4.67	3.16	5.00	3.55	5.35	3.88	5.51	4.45
25.0	3.92	2.41	4.43	2.74	4.67	3.16	5.00	3.55	5.35	3.88	5.51	4.45
30.0	3.92	2.41	4.43	2.74	4.67	3.16	5.00	3.55	5.35	3.88	5.51	4.45
35.0	3.92	2.41	4.43	2.74	4.67	3.16	5.00	3.55	5.35	3.88	5.51	4.45
40.0	3.24	1.65	3.67	1.88	3.87	2.16	4.14	2.43	4.42	2.66	4.56	3.05
46.0	2.57	1.03	2.90	1.18	3.06	1.36	3.28	1.52	3.50	1.67	3.61	1.91

Model: ARXG18KSLAP

Outdoor temperature	Indoor temperature (°CDB / °CWB)											
	18.0 / 12.0		21.0 / 15.0		23.0 / 16.0		27.0 / 19.0		29.0 / 21.0		32.0 / 23.0	
(°CDB)	TC	SHC	TC	SHC	TC	SHC	TC	SHC	TC	SHC	TC	SHC
-10.0	4.75	2.96	5.37	3.37	5.66	3.88	6.06	4.36	6.48	4.77	6.68	5.47
-5.0	4.75	2.96	5.37	3.37	5.66	3.88	6.06	4.36	6.48	4.77	6.68	5.47
0.0	4.75	2.96	5.37	3.37	5.66	3.88	6.06	4.36	6.48	4.77	6.68	5.47
5.0	4.75	2.96	5.37	3.37	5.66	3.88	6.06	4.36	6.48	4.77	6.68	5.47
10.0	4.75	2.96	5.37	3.37	5.66	3.88	6.06	4.36	6.48	4.77	6.68	5.47
15.0	4.75	2.96	5.37	3.37	5.66	3.88	6.06	4.36	6.48	4.77	6.68	5.47
20.0	4.75	2.96	5.37	3.37	5.66	3.88	6.06	4.36	6.48	4.77	6.68	5.47
25.0	4.75	2.96	5.37	3.37	5.66	3.88	6.06	4.36	6.48	4.77	6.68	5.47
30.0	4.75	2.96	5.37	3.37	5.66	3.88	6.06	4.36	6.48	4.77	6.68	5.47
35.0	4.75	2.96	5.37	3.37	5.66	3.88	6.06	4.36	6.48	4.77	6.68	5.47
40.0	3.93	2.03	4.44	2.31	4.68	2.66	5.02	2.99	5.36	3.27	5.53	3.75
46.0	3.11	1.27	3.52	1.45	3.71	1.67	3.97	1.87	4.25	2.05	4.38	2.35

NOTES:

- TC: Total Capacity (kW), SHC: Sensible Heat Capacity (kW)
- Values mentioned in the table are based on the following conditions:
  - Pipe length: 5 m, Height difference: 0 m (Outdoor unit—Indoor unit)

OUTDOOR UNIT
AOEG30KBTA4

● Slim duct type

Model: ARXG07KLLAP

Outdoor temperature	Indoor temperature (°CDB / °CWB)											
	18.0 / 12.0		21.0 / 15.0		23.0 / 16.0		27.0 / 19.0		29.0 / 21.0		32.0 / 23.0	
(°CDB)	TC	SHC	TC	SHC	TC	SHC	TC	SHC	TC	SHC	TC	SHC
-10.0	1.96	1.36	2.22	1.55	2.34	1.78	2.50	2.00	2.67	2.19	2.76	2.51
-5.0	1.96	1.36	2.22	1.55	2.34	1.78	2.50	2.00	2.67	2.19	2.76	2.51
0.0	1.96	1.36	2.22	1.55	2.34	1.78	2.50	2.00	2.67	2.19	2.76	2.51
5.0	1.96	1.36	2.22	1.55	2.34	1.78	2.50	2.00	2.67	2.19	2.76	2.51
10.0	1.96	1.36	2.22	1.55	2.34	1.78	2.50	2.00	2.67	2.19	2.76	2.51
15.0	1.96	1.36	2.22	1.55	2.34	1.78	2.50	2.00	2.67	2.19	2.76	2.51
20.0	1.96	1.36	2.22	1.55	2.34	1.78	2.50	2.00	2.67	2.19	2.76	2.51
25.0	1.96	1.36	2.22	1.55	2.34	1.78	2.50	2.00	2.67	2.19	2.76	2.51
30.0	1.96	1.36	2.22	1.55	2.34	1.78	2.50	2.00	2.67	2.19	2.76	2.51
35.0	1.96	1.36	2.22	1.55	2.34	1.78	2.50	2.00	2.67	2.19	2.76	2.51
40.0	1.62	0.93	1.83	1.06	1.93	1.22	2.07	1.37	2.21	1.50	2.28	1.72
46.0	1.28	0.58	1.45	0.66	1.53	0.76	1.64	0.86	1.75	0.94	1.81	1.08

Model: ARXG09KLLAP

Outdoor temperature	Indoor temperature (°CDB / °CWB)											
	18.0 / 12.0		21.0 / 15.0		23.0 / 16.0		27.0 / 19.0		29.0 / 21.0		32.0 / 23.0	
(°CDB)	TC	SHC	TC	SHC	TC	SHC	TC	SHC	TC	SHC	TC	SHC
-10.0	2.51	1.67	2.84	1.90	2.99	2.19	3.20	2.46	3.42	2.69	3.53	3.09
-5.0	2.51	1.67	2.84	1.90	2.99	2.19	3.20	2.46	3.42	2.69	3.53	3.09
0.0	2.51	1.67	2.84	1.90	2.99	2.19	3.20	2.46	3.42	2.69	3.53	3.09
5.0	2.51	1.67	2.84	1.90	2.99	2.19	3.20	2.46	3.42	2.69	3.53	3.09
10.0	2.51	1.67	2.84	1.90	2.99	2.19	3.20	2.46	3.42	2.69	3.53	3.09
15.0	2.51	1.67	2.84	1.90	2.99	2.19	3.20	2.46	3.42	2.69	3.53	3.09
20.0	2.51	1.67	2.84	1.90	2.99	2.19	3.20	2.46	3.42	2.69	3.53	3.09
25.0	2.51	1.67	2.84	1.90	2.99	2.19	3.20	2.46	3.42	2.69	3.53	3.09
30.0	2.51	1.67	2.84	1.90	2.99	2.19	3.20	2.46	3.42	2.69	3.53	3.09
35.0	2.51	1.67	2.84	1.90	2.99	2.19	3.20	2.46	3.42	2.69	3.53	3.09
40.0	2.08	1.14	2.35	1.30	2.47	1.50	2.65	1.69	2.83	1.85	2.92	2.11
46.0	1.64	0.72	1.86	0.82	1.96	0.94	2.10	1.06	2.24	1.16	2.31	1.33

Model: ARXG12KLLAP

Outdoor temperature	Indoor temperature (°CDB / °CWB)											
	18.0 / 12.0		21.0 / 15.0		23.0 / 16.0		27.0 / 19.0		29.0 / 21.0		32.0 / 23.0	
(°CDB)	TC	SHC	TC	SHC	TC	SHC	TC	SHC	TC	SHC	TC	SHC
-10.0	3.37	2.27	3.81	2.59	4.02	2.99	4.30	3.35	4.60	3.67	4.74	4.20
-5.0	3.37	2.27	3.81	2.59	4.02	2.99	4.30	3.35	4.60	3.67	4.74	4.20
0.0	3.37	2.27	3.81	2.59	4.02	2.99	4.30	3.35	4.60	3.67	4.74	4.20
5.0	3.37	2.27	3.81	2.59	4.02	2.99	4.30	3.35	4.60	3.67	4.74	4.20
10.0	3.37	2.27	3.81	2.59	4.02	2.99	4.30	3.35	4.60	3.67	4.74	4.20
15.0	3.37	2.27	3.81	2.59	4.02	2.99	4.30	3.35	4.60	3.67	4.74	4.20
20.0	3.37	2.27	3.81	2.59	4.02	2.99	4.30	3.35	4.60	3.67	4.74	4.20
25.0	3.37	2.27	3.81	2.59	4.02	2.99	4.30	3.35	4.60	3.67	4.74	4.20
30.0	3.37	2.27	3.81	2.59	4.02	2.99	4.30	3.35	4.60	3.67	4.74	4.20
35.0	3.37	2.27	3.81	2.59	4.02	2.99	4.30	3.35	4.60	3.67	4.74	4.20
40.0	2.79	1.56	3.15	1.78	3.32	2.04	3.56	2.30	3.80	2.51	3.92	2.88
46.0	2.21	0.98	2.50	1.11	2.63	1.28	2.82	1.44	3.01	1.58	3.11	1.80

Model: ARXG14KLLAP

Outdoor temperature	Indoor temperature (°CDB / °CWB)											
	18.0 / 12.0		21.0 / 15.0		23.0 / 16.0		27.0 / 19.0		29.0 / 21.0		32.0 / 23.0	
(°CDB)	TC	SHC	TC	SHC	TC	SHC	TC	SHC	TC	SHC	TC	SHC
-10.0	3.92	2.51	4.43	2.86	4.67	3.29	5.00	3.70	5.35	4.05	5.51	4.64
-5.0	3.92	2.51	4.43	2.86	4.67	3.29	5.00	3.70	5.35	4.05	5.51	4.64
0.0	3.92	2.51	4.43	2.86	4.67	3.29	5.00	3.70	5.35	4.05	5.51	4.64
5.0	3.92	2.51	4.43	2.86	4.67	3.29	5.00	3.70	5.35	4.05	5.51	4.64
10.0	3.92	2.51	4.43	2.86	4.67	3.29	5.00	3.70	5.35	4.05	5.51	4.64
15.0	3.92	2.51	4.43	2.86	4.67	3.29	5.00	3.70	5.35	4.05	5.51	4.64
20.0	3.92	2.51	4.43	2.86	4.67	3.29	5.00	3.70	5.35	4.05	5.51	4.64
25.0	3.92	2.51	4.43	2.86	4.67	3.29	5.00	3.70	5.35	4.05	5.51	4.64
30.0	3.92	2.51	4.43	2.86	4.67	3.29	5.00	3.70	5.35	4.05	5.51	4.64
35.0	3.92	2.51	4.43	2.86	4.67	3.29	5.00	3.70	5.35	4.05	5.51	4.64
40.0	3.24	1.72	3.67	1.96	3.87	2.26	4.14	2.53	4.42	2.77	4.56	3.18
46.0	2.57	1.08	2.90	1.23	3.06	1.41	3.28	1.59	3.50	1.74	3.61	1.99

Model: ARXG18KLLAP

Outdoor temperature	Indoor temperature (°CDB / °CWB)											
	18.0 / 12.0		21.0 / 15.0		23.0 / 16.0		27.0 / 19.0		29.0 / 21.0		32.0 / 23.0	
(°CDB)	TC	SHC	TC	SHC	TC	SHC	TC	SHC	TC	SHC	TC	SHC
-10.0	4.75	2.96	5.37	3.37	5.66	3.88	6.06	4.36	6.48	4.77	6.68	5.47
-5.0	4.75	2.96	5.37	3.37	5.66	3.88	6.06	4.36	6.48	4.77	6.68	5.47
0.0	4.75	2.96	5.37	3.37	5.66	3.88	6.06	4.36	6.48	4.77	6.68	5.47
5.0	4.75	2.96	5.37	3.37	5.66	3.88	6.06	4.36	6.48	4.77	6.68	5.47
10.0	4.75	2.96	5.37	3.37	5.66	3.88	6.06	4.36	6.48	4.77	6.68	5.47
15.0	4.75	2.96	5.37	3.37	5.66	3.88	6.06	4.36	6.48	4.77	6.68	5.47
20.0	4.75	2.96	5.37	3.37	5.66	3.88	6.06	4.36	6.48	4.77	6.68	5.47
25.0	4.75	2.96	5.37	3.37	5.66	3.88	6.06	4.36	6.48	4.77	6.68	5.47
30.0	4.75	2.96	5.37	3.37	5.66	3.88	6.06	4.36	6.48	4.77	6.68	5.47
35.0	4.75	2.96	5.37	3.37	5.66	3.88	6.06	4.36	6.48	4.77	6.68	5.47
40.0	3.93	2.03	4.44	2.31	4.68	2.66	5.02	2.99	5.36	3.27	5.53	3.75
46.0	3.11	1.27	3.52	1.45	3.71	1.67	3.97	1.87	4.25	2.05	4.38	2.35

NOTES:

- TC: Total Capacity (kW), SHC: Sensible Heat Capacity (kW)
- Values mentioned in the table are based on the following conditions:
  - Pipe length: 5 m, Height difference: 0 m (Outdoor unit—Indoor unit)

● Medium static pressure duct type (ARXG22KMLB)

Model: ARXG22KMLB

Outdoor temperature	Indoor temperature (°CDB / °CWB)											
	18.0 / 12.0		21.0 / 15.0		23.0 / 16.0		27.0 / 19.0		29.0 / 21.0		32.0 / 23.0	
(°CDB)	TC	SHC	TC	SHC	TC	SHC	TC	SHC	TC	SHC	TC	SHC
-10.0	6.01	3.96	6.79	4.51	7.15	5.19	7.66	5.83	8.19	6.38	8.44	7.31
-5.0	6.01	3.96	6.79	4.51	7.15	5.19	7.66	5.83	8.19	6.38	8.44	7.31
0.0	6.01	3.96	6.79	4.51	7.15	5.19	7.66	5.83	8.19	6.38	8.44	7.31
5.0	6.01	3.96	6.79	4.51	7.15	5.19	7.66	5.83	8.19	6.38	8.44	7.31
10.0	6.01	3.96	6.79	4.51	7.15	5.19	7.66	5.83	8.19	6.38	8.44	7.31
15.0	6.01	3.96	6.79	4.51	7.15	5.19	7.66	5.83	8.19	6.38	8.44	7.31
20.0	6.01	3.96	6.79	4.51	7.15	5.19	7.66	5.83	8.19	6.38	8.44	7.31
25.0	6.01	3.96	6.79	4.51	7.15	5.19	7.66	5.83	8.19	6.38	8.44	7.31
30.0	6.01	3.96	6.79	4.51	7.15	5.19	7.66	5.83	8.19	6.38	8.44	7.31
35.0	6.01	3.96	6.79	4.51	7.15	5.19	7.66	5.83	8.19	6.38	8.44	7.31
40.0	4.97	2.71	5.62	3.09	5.92	3.56	6.34	4.00	6.78	4.37	6.99	5.01
46.0	3.94	1.70	4.45	1.94	4.69	2.23	5.02	2.51	5.37	2.74	5.53	3.14

NOTES:

- TC: Total Capacity (kW), SHC: Sensible Heat Capacity (kW).
- Values mentioned in the table are based on the following conditions:
  - Pipe length: 5 m, Height difference: 0 m (Outdoor unit—Indoor unit)

● Medium static pressure duct type (ARXH12–22KMTAP)

Model: ARXH12KMTAP

Outdoor temperature	Indoor temperature (°CDB / °CWB)											
	18.0 / 12.0		21.0 / 15.0		23.0 / 16.0		27.0 / 19.0		29.0 / 21.0		32.0 / 23.0	
(°CDB)	TC	SHC	TC	SHC	TC	SHC	TC	SHC	TC	SHC	TC	SHC
-10.0	3.37	2.27	3.81	2.59	4.02	2.99	4.30	3.35	4.60	3.67	4.74	4.20
-5.0	3.37	2.27	3.81	2.59	4.02	2.99	4.30	3.35	4.60	3.67	4.74	4.20
0.0	3.37	2.27	3.81	2.59	4.02	2.99	4.30	3.35	4.60	3.67	4.74	4.20
5.0	3.37	2.27	3.81	2.59	4.02	2.99	4.30	3.35	4.60	3.67	4.74	4.20
10.0	3.37	2.27	3.81	2.59	4.02	2.99	4.30	3.35	4.60	3.67	4.74	4.20
15.0	3.37	2.27	3.81	2.59	4.02	2.99	4.30	3.35	4.60	3.67	4.74	4.20
20.0	3.37	2.27	3.81	2.59	4.02	2.99	4.30	3.35	4.60	3.67	4.74	4.20
25.0	3.37	2.27	3.81	2.59	4.02	2.99	4.30	3.35	4.60	3.67	4.74	4.20
30.0	3.37	2.27	3.81	2.59	4.02	2.99	4.30	3.35	4.60	3.67	4.74	4.20
35.0	3.37	2.27	3.81	2.59	4.02	2.99	4.30	3.35	4.60	3.67	4.74	4.20
40.0	2.79	1.56	3.15	1.78	3.32	2.04	3.56	2.30	3.80	2.51	3.92	2.88
46.0	2.21	0.98	2.50	1.11	2.63	1.28	2.82	1.44	3.01	1.58	3.11	1.80

Model: ARXH14KMTAP

Outdoor temperature	Indoor temperature (°CDB / °CWB)											
	18.0 / 12.0		21.0 / 15.0		23.0 / 16.0		27.0 / 19.0		29.0 / 21.0		32.0 / 23.0	
(°CDB)	TC	SHC	TC	SHC	TC	SHC	TC	SHC	TC	SHC	TC	SHC
-10.0	3.92	2.63	4.43	2.99	4.67	3.44	5.00	3.87	5.35	4.24	5.51	4.86
-5.0	3.92	2.63	4.43	2.99	4.67	3.44	5.00	3.87	5.35	4.24	5.51	4.86
0.0	3.92	2.63	4.43	2.99	4.67	3.44	5.00	3.87	5.35	4.24	5.51	4.86
5.0	3.92	2.63	4.43	2.99	4.67	3.44	5.00	3.87	5.35	4.24	5.51	4.86
10.0	3.92	2.63	4.43	2.99	4.67	3.44	5.00	3.87	5.35	4.24	5.51	4.86
15.0	3.92	2.63	4.43	2.99	4.67	3.44	5.00	3.87	5.35	4.24	5.51	4.86
20.0	3.92	2.63	4.43	2.99	4.67	3.44	5.00	3.87	5.35	4.24	5.51	4.86
25.0	3.92	2.63	4.43	2.99	4.67	3.44	5.00	3.87	5.35	4.24	5.51	4.86
30.0	3.92	2.63	4.43	2.99	4.67	3.44	5.00	3.87	5.35	4.24	5.51	4.86
35.0	3.92	2.63	4.43	2.99	4.67	3.44	5.00	3.87	5.35	4.24	5.51	4.86
40.0	3.24	1.80	3.67	2.05	3.87	2.37	4.14	2.65	4.42	2.90	4.56	3.33
46.0	2.57	1.13	2.90	1.29	3.06	1.48	3.28	1.66	3.50	1.82	3.61	2.08

Model: ARXH18KMTAP

Outdoor temperature	Indoor temperature (°CDB / °CWB)											
	18.0 / 12.0		21.0 / 15.0		23.0 / 16.0		27.0 / 19.0		29.0 / 21.0		32.0 / 23.0	
(°CDB)	TC	SHC	TC	SHC	TC	SHC	TC	SHC	TC	SHC	TC	SHC
-10.0	4.75	2.96	5.37	3.37	5.66	3.88	6.06	4.36	6.48	4.77	6.68	5.47
-5.0	4.75	2.96	5.37	3.37	5.66	3.88	6.06	4.36	6.48	4.77	6.68	5.47
0.0	4.75	2.96	5.37	3.37	5.66	3.88	6.06	4.36	6.48	4.77	6.68	5.47
5.0	4.75	2.96	5.37	3.37	5.66	3.88	6.06	4.36	6.48	4.77	6.68	5.47
10.0	4.75	2.96	5.37	3.37	5.66	3.88	6.06	4.36	6.48	4.77	6.68	5.47
15.0	4.75	2.96	5.37	3.37	5.66	3.88	6.06	4.36	6.48	4.77	6.68	5.47
20.0	4.75	2.96	5.37	3.37	5.66	3.88	6.06	4.36	6.48	4.77	6.68	5.47
25.0	4.75	2.96	5.37	3.37	5.66	3.88	6.06	4.36	6.48	4.77	6.68	5.47
30.0	4.75	2.96	5.37	3.37	5.66	3.88	6.06	4.36	6.48	4.77	6.68	5.47
35.0	4.75	2.96	5.37	3.37	5.66	3.88	6.06	4.36	6.48	4.77	6.68	5.47
40.0	3.93	2.03	4.44	2.31	4.68	2.66	5.02	2.99	5.36	3.27	5.53	3.75
46.0	3.11	1.27	3.52	1.45	3.71	1.67	3.97	1.87	4.25	2.05	4.38	2.35

Model: ARXH22KMTAP

Outdoor temperature	Indoor temperature (°CDB / °CWB)											
	18.0 / 12.0		21.0 / 15.0		23.0 / 16.0		27.0 / 19.0		29.0 / 21.0		32.0 / 23.0	
(°CDB)	TC	SHC	TC	SHC	TC	SHC	TC	SHC	TC	SHC	TC	SHC
-10.0	6.01	4.32	6.79	4.91	7.15	5.66	7.66	6.35	8.19	6.95	8.44	7.97
-5.0	6.01	4.32	6.79	4.91	7.15	5.66	7.66	6.35	8.19	6.95	8.44	7.97
0.0	6.01	4.32	6.79	4.91	7.15	5.66	7.66	6.35	8.19	6.95	8.44	7.97
5.0	6.01	4.32	6.79	4.91	7.15	5.66	7.66	6.35	8.19	6.95	8.44	7.97
10.0	6.01	4.32	6.79	4.91	7.15	5.66	7.66	6.35	8.19	6.95	8.44	7.97
15.0	6.01	4.32	6.79	4.91	7.15	5.66	7.66	6.35	8.19	6.95	8.44	7.97
20.0	6.01	4.32	6.79	4.91	7.15	5.66	7.66	6.35	8.19	6.95	8.44	7.97
25.0	6.01	4.32	6.79	4.91	7.15	5.66	7.66	6.35	8.19	6.95	8.44	7.97
30.0	6.01	4.32	6.79	4.91	7.15	5.66	7.66	6.35	8.19	6.95	8.44	7.97
35.0	6.01	4.32	6.79	4.91	7.15	5.66	7.66	6.35	8.19	6.95	8.44	7.97
40.0	4.97	2.95	5.62	3.37	5.92	3.88	6.34	4.36	6.78	4.76	6.99	5.46
46.0	3.94	1.85	4.45	2.11	4.69	2.43	5.02	2.74	5.37	2.99	5.53	3.42

NOTES:

- TC: Total Capacity (kW), SHC: Sensible Heat Capacity (kW).
- Values mentioned in the table are based on the following conditions:
  - Pipe length: 5 m, Height difference: 0 m (Outdoor unit—Indoor unit)

● Wall mounted type

Model: ASEH07KMCG, ASEH07KMCG-B

Outdoor temperature	Indoor temperature (°CDB / °CWB)											
	18.0 / 12.0		21.0 / 15.0		23.0 / 16.0		27.0 / 19.0		29.0 / 21.0		32.0 / 23.0	
(°CDB)	TC	SHC	TC	SHC	TC	SHC	TC	SHC	TC	SHC	TC	SHC
-10.0	1.96	1.10	2.22	1.26	2.34	1.45	2.50	1.63	2.67	1.78	2.76	2.04
-5.0	1.96	1.10	2.22	1.26	2.34	1.45	2.50	1.63	2.67	1.78	2.76	2.04
0.0	1.96	1.10	2.22	1.26	2.34	1.45	2.50	1.63	2.67	1.78	2.76	2.04
5.0	1.96	1.10	2.22	1.26	2.34	1.45	2.50	1.63	2.67	1.78	2.76	2.04
10.0	1.96	1.10	2.22	1.26	2.34	1.45	2.50	1.63	2.67	1.78	2.76	2.04
15.0	1.96	1.10	2.22	1.26	2.34	1.45	2.50	1.63	2.67	1.78	2.76	2.04
20.0	1.96	1.10	2.22	1.26	2.34	1.45	2.50	1.63	2.67	1.78	2.76	2.04
25.0	1.96	1.10	2.22	1.26	2.34	1.45	2.50	1.63	2.67	1.78	2.76	2.04
30.0	1.96	1.10	2.22	1.26	2.34	1.45	2.50	1.63	2.67	1.78	2.76	2.04
35.0	1.96	1.10	2.22	1.26	2.34	1.45	2.50	1.63	2.67	1.78	2.76	2.04
40.0	1.62	0.75	1.83	0.86	1.93	0.99	2.07	1.11	2.21	1.22	2.28	1.39
46.0	1.28	0.47	1.45	0.54	1.53	0.62	1.64	0.70	1.75	0.76	1.81	0.87

Model: ASEH09KMCG, ASEH09KMCG-B

Outdoor temperature	Indoor temperature (°CDB / °CWB)											
	18.0 / 12.0		21.0 / 15.0		23.0 / 16.0		27.0 / 19.0		29.0 / 21.0		32.0 / 23.0	
(°CDB)	TC	SHC	TC	SHC	TC	SHC	TC	SHC	TC	SHC	TC	SHC
-10.0	2.51	1.41	2.84	1.61	2.99	1.85	3.20	2.08	3.42	2.27	3.53	2.61
-5.0	2.51	1.41	2.84	1.61	2.99	1.85	3.20	2.08	3.42	2.27	3.53	2.61
0.0	2.51	1.41	2.84	1.61	2.99	1.85	3.20	2.08	3.42	2.27	3.53	2.61
5.0	2.51	1.41	2.84	1.61	2.99	1.85	3.20	2.08	3.42	2.27	3.53	2.61
10.0	2.51	1.41	2.84	1.61	2.99	1.85	3.20	2.08	3.42	2.27	3.53	2.61
15.0	2.51	1.41	2.84	1.61	2.99	1.85	3.20	2.08	3.42	2.27	3.53	2.61
20.0	2.51	1.41	2.84	1.61	2.99	1.85	3.20	2.08	3.42	2.27	3.53	2.61
25.0	2.51	1.41	2.84	1.61	2.99	1.85	3.20	2.08	3.42	2.27	3.53	2.61
30.0	2.51	1.41	2.84	1.61	2.99	1.85	3.20	2.08	3.42	2.27	3.53	2.61
35.0	2.51	1.41	2.84	1.61	2.99	1.85	3.20	2.08	3.42	2.27	3.53	2.61
40.0	2.08	0.97	2.35	1.10	2.47	1.27	2.65	1.42	2.83	1.56	2.92	1.79
46.0	1.64	0.61	1.86	0.69	1.96	0.79	2.10	0.89	2.24	0.98	2.31	1.12

Model: ASEH12KMCG, ASEH12KMCG-B

Outdoor temperature	Indoor temperature (°CDB / °CWB)											
	18.0 / 12.0		21.0 / 15.0		23.0 / 16.0		27.0 / 19.0		29.0 / 21.0		32.0 / 23.0	
(°CDB)	TC	SHC	TC	SHC	TC	SHC	TC	SHC	TC	SHC	TC	SHC
-10.0	3.37	1.90	3.81	2.16	4.02	2.49	4.30	2.80	4.60	3.06	4.74	3.50
-5.0	3.37	1.90	3.81	2.16	4.02	2.49	4.30	2.80	4.60	3.06	4.74	3.50
0.0	3.37	1.90	3.81	2.16	4.02	2.49	4.30	2.80	4.60	3.06	4.74	3.50
5.0	3.37	1.90	3.81	2.16	4.02	2.49	4.30	2.80	4.60	3.06	4.74	3.50
10.0	3.37	1.90	3.81	2.16	4.02	2.49	4.30	2.80	4.60	3.06	4.74	3.50
15.0	3.37	1.90	3.81	2.16	4.02	2.49	4.30	2.80	4.60	3.06	4.74	3.50
20.0	3.37	1.90	3.81	2.16	4.02	2.49	4.30	2.80	4.60	3.06	4.74	3.50
25.0	3.37	1.90	3.81	2.16	4.02	2.49	4.30	2.80	4.60	3.06	4.74	3.50
30.0	3.37	1.90	3.81	2.16	4.02	2.49	4.30	2.80	4.60	3.06	4.74	3.50
35.0	3.37	1.90	3.81	2.16	4.02	2.49	4.30	2.80	4.60	3.06	4.74	3.50
40.0	2.79	1.30	3.15	1.48	3.32	1.70	3.56	1.91	3.80	2.09	3.92	2.40
46.0	2.21	0.81	2.50	0.93	2.63	1.07	2.82	1.20	3.01	1.31	3.11	1.50

Model: ASEH14KMCG, ASEH14KMCG-B

Outdoor temperature	Indoor temperature (°CDB / °CWB)											
	18.0 / 12.0		21.0 / 15.0		23.0 / 16.0		27.0 / 19.0		29.0 / 21.0		32.0 / 23.0	
(°CDB)	TC	SHC	TC	SHC	TC	SHC	TC	SHC	TC	SHC	TC	SHC
-10.0	3.92	2.20	4.43	2.51	4.67	2.89	5.00	3.25	5.35	3.55	5.51	4.07
-5.0	3.92	2.20	4.43	2.51	4.67	2.89	5.00	3.25	5.35	3.55	5.51	4.07
0.0	3.92	2.20	4.43	2.51	4.67	2.89	5.00	3.25	5.35	3.55	5.51	4.07
5.0	3.92	2.20	4.43	2.51	4.67	2.89	5.00	3.25	5.35	3.55	5.51	4.07
10.0	3.92	2.20	4.43	2.51	4.67	2.89	5.00	3.25	5.35	3.55	5.51	4.07
15.0	3.92	2.20	4.43	2.51	4.67	2.89	5.00	3.25	5.35	3.55	5.51	4.07
20.0	3.92	2.20	4.43	2.51	4.67	2.89	5.00	3.25	5.35	3.55	5.51	4.07
25.0	3.92	2.20	4.43	2.51	4.67	2.89	5.00	3.25	5.35	3.55	5.51	4.07
30.0	3.92	2.20	4.43	2.51	4.67	2.89	5.00	3.25	5.35	3.55	5.51	4.07
35.0	3.92	2.20	4.43	2.51	4.67	2.89	5.00	3.25	5.35	3.55	5.51	4.07
40.0	3.24	1.51	3.67	1.72	3.87	1.98	4.14	2.23	4.42	2.43	4.56	2.79
46.0	2.57	0.95	2.90	1.08	3.06	1.24	3.28	1.40	3.50	1.53	3.61	1.75

Model: ASEG07KETF, ASEG07KETF-B

Outdoor temperature	Indoor temperature (°CDB / °CWB)											
	18.0 / 12.0		21.0 / 15.0		23.0 / 16.0		27.0 / 19.0		29.0 / 21.0		32.0 / 23.0	
(°CDB)	TC	SHC	TC	SHC	TC	SHC	TC	SHC	TC	SHC	TC	SHC
-10.0	1.96	1.10	2.22	1.26	2.34	1.45	2.50	1.63	2.67	1.78	2.76	2.04
-5.0	1.96	1.10	2.22	1.26	2.34	1.45	2.50	1.63	2.67	1.78	2.76	2.04
0.0	1.96	1.10	2.22	1.26	2.34	1.45	2.50	1.63	2.67	1.78	2.76	2.04
5.0	1.96	1.10	2.22	1.26	2.34	1.45	2.50	1.63	2.67	1.78	2.76	2.04
10.0	1.96	1.10	2.22	1.26	2.34	1.45	2.50	1.63	2.67	1.78	2.76	2.04
15.0	1.96	1.10	2.22	1.26	2.34	1.45	2.50	1.63	2.67	1.78	2.76	2.04
20.0	1.96	1.10	2.22	1.26	2.34	1.45	2.50	1.63	2.67	1.78	2.76	2.04
25.0	1.96	1.10	2.22	1.26	2.34	1.45	2.50	1.63	2.67	1.78	2.76	2.04
30.0	1.96	1.10	2.22	1.26	2.34	1.45	2.50	1.63	2.67	1.78	2.76	2.04
35.0	1.96	1.10	2.22	1.26	2.34	1.45	2.50	1.63	2.67	1.78	2.76	2.04
40.0	1.62	0.75	1.83	0.86	1.93	0.99	2.07	1.11	2.21	1.22	2.28	1.39
46.0	1.28	0.47	1.45	0.54	1.53	0.62	1.64	0.70	1.75	0.76	1.81	0.87

Model: ASEG09KETF, ASEG09KETF-B

Outdoor temperature	Indoor temperature (°CDB / °CWB)											
	18.0 / 12.0		21.0 / 15.0		23.0 / 16.0		27.0 / 19.0		29.0 / 21.0		32.0 / 23.0	
(°CDB)	TC	SHC	TC	SHC	TC	SHC	TC	SHC	TC	SHC	TC	SHC
-10.0	2.51	1.41	2.84	1.61	2.99	1.85	3.20	2.08	3.42	2.27	3.53	2.61
-5.0	2.51	1.41	2.84	1.61	2.99	1.85	3.20	2.08	3.42	2.27	3.53	2.61
0.0	2.51	1.41	2.84	1.61	2.99	1.85	3.20	2.08	3.42	2.27	3.53	2.61
5.0	2.51	1.41	2.84	1.61	2.99	1.85	3.20	2.08	3.42	2.27	3.53	2.61
10.0	2.51	1.41	2.84	1.61	2.99	1.85	3.20	2.08	3.42	2.27	3.53	2.61
15.0	2.51	1.41	2.84	1.61	2.99	1.85	3.20	2.08	3.42	2.27	3.53	2.61
20.0	2.51	1.41	2.84	1.61	2.99	1.85	3.20	2.08	3.42	2.27	3.53	2.61
25.0	2.51	1.41	2.84	1.61	2.99	1.85	3.20	2.08	3.42	2.27	3.53	2.61
30.0	2.51	1.41	2.84	1.61	2.99	1.85	3.20	2.08	3.42	2.27	3.53	2.61
35.0	2.51	1.41	2.84	1.61	2.99	1.85	3.20	2.08	3.42	2.27	3.53	2.61
40.0	2.08	0.97	2.35	1.10	2.47	1.27	2.65	1.42	2.83	1.56	2.92	1.79
46.0	1.64	0.61	1.86	0.69	1.96	0.79	2.10	0.89	2.24	0.98	2.31	1.12

Model: ASEG12KETF, ASEG12KETF-B

Outdoor temperature	Indoor temperature (°CDB / °CWB)											
	18.0 / 12.0		21.0 / 15.0		23.0 / 16.0		27.0 / 19.0		29.0 / 21.0		32.0 / 23.0	
(°CDB)	TC	SHC	TC	SHC	TC	SHC	TC	SHC	TC	SHC	TC	SHC
-10.0	3.37	1.90	3.81	2.16	4.02	2.49	4.30	2.80	4.60	3.06	4.74	3.50
-5.0	3.37	1.90	3.81	2.16	4.02	2.49	4.30	2.80	4.60	3.06	4.74	3.50
0.0	3.37	1.90	3.81	2.16	4.02	2.49	4.30	2.80	4.60	3.06	4.74	3.50
5.0	3.37	1.90	3.81	2.16	4.02	2.49	4.30	2.80	4.60	3.06	4.74	3.50
10.0	3.37	1.90	3.81	2.16	4.02	2.49	4.30	2.80	4.60	3.06	4.74	3.50
15.0	3.37	1.90	3.81	2.16	4.02	2.49	4.30	2.80	4.60	3.06	4.74	3.50
20.0	3.37	1.90	3.81	2.16	4.02	2.49	4.30	2.80	4.60	3.06	4.74	3.50
25.0	3.37	1.90	3.81	2.16	4.02	2.49	4.30	2.80	4.60	3.06	4.74	3.50
30.0	3.37	1.90	3.81	2.16	4.02	2.49	4.30	2.80	4.60	3.06	4.74	3.50
35.0	3.37	1.90	3.81	2.16	4.02	2.49	4.30	2.80	4.60	3.06	4.74	3.50
40.0	2.79	1.30	3.15	1.48	3.32	1.70	3.56	1.91	3.80	2.09	3.92	2.40
46.0	2.21	0.81	2.50	0.93	2.63	1.07	2.82	1.20	3.01	1.31	3.11	1.50

Model: ASEG14KETF, ASEG14KETF-B

Outdoor temperature	Indoor temperature (°CDB / °CWB)											
	18.0 / 12.0		21.0 / 15.0		23.0 / 16.0		27.0 / 19.0		29.0 / 21.0		32.0 / 23.0	
(°CDB)	TC	SHC	TC	SHC	TC	SHC	TC	SHC	TC	SHC	TC	SHC
-10.0	3.92	2.20	4.43	2.51	4.67	2.89	5.00	3.25	5.35	3.55	5.51	4.07
-5.0	3.92	2.20	4.43	2.51	4.67	2.89	5.00	3.25	5.35	3.55	5.51	4.07
0.0	3.92	2.20	4.43	2.51	4.67	2.89	5.00	3.25	5.35	3.55	5.51	4.07
5.0	3.92	2.20	4.43	2.51	4.67	2.89	5.00	3.25	5.35	3.55	5.51	4.07
10.0	3.92	2.20	4.43	2.51	4.67	2.89	5.00	3.25	5.35	3.55	5.51	4.07
15.0	3.92	2.20	4.43	2.51	4.67	2.89	5.00	3.25	5.35	3.55	5.51	4.07
20.0	3.92	2.20	4.43	2.51	4.67	2.89	5.00	3.25	5.35	3.55	5.51	4.07
25.0	3.92	2.20	4.43	2.51	4.67	2.89	5.00	3.25	5.35	3.55	5.51	4.07
30.0	3.92	2.20	4.43	2.51	4.67	2.89	5.00	3.25	5.35	3.55	5.51	4.07
35.0	3.92	2.20	4.43	2.51	4.67	2.89	5.00	3.25	5.35	3.55	5.51	4.07
40.0	3.24	1.51	3.67	1.72	3.87	1.98	4.14	2.23	4.42	2.43	4.56	2.79
46.0	2.57	0.95	2.90	1.08	3.06	1.24	3.28	1.40	3.50	1.53	3.61	1.75

Model: ASEH07KGTG

Outdoor temperature	Indoor temperature (°CDB / °CWB)											
	18.0 / 12.0		21.0 / 15.0		23.0 / 16.0		27.0 / 19.0		29.0 / 21.0		32.0 / 23.0	
(°CDB)	TC	SHC	TC	SHC	TC	SHC	TC	SHC	TC	SHC	TC	SHC
-10.0	1.96	1.10	2.22	1.26	2.34	1.45	2.50	1.63	2.67	1.78	2.76	2.04
-5.0	1.96	1.10	2.22	1.26	2.34	1.45	2.50	1.63	2.67	1.78	2.76	2.04
0.0	1.96	1.10	2.22	1.26	2.34	1.45	2.50	1.63	2.67	1.78	2.76	2.04
5.0	1.96	1.10	2.22	1.26	2.34	1.45	2.50	1.63	2.67	1.78	2.76	2.04
10.0	1.96	1.10	2.22	1.26	2.34	1.45	2.50	1.63	2.67	1.78	2.76	2.04
15.0	1.96	1.10	2.22	1.26	2.34	1.45	2.50	1.63	2.67	1.78	2.76	2.04
20.0	1.96	1.10	2.22	1.26	2.34	1.45	2.50	1.63	2.67	1.78	2.76	2.04
25.0	1.96	1.10	2.22	1.26	2.34	1.45	2.50	1.63	2.67	1.78	2.76	2.04
30.0	1.96	1.10	2.22	1.26	2.34	1.45	2.50	1.63	2.67	1.78	2.76	2.04
35.0	1.96	1.10	2.22	1.26	2.34	1.45	2.50	1.63	2.67	1.78	2.76	2.04
40.0	1.62	0.75	1.83	0.86	1.93	0.99	2.07	1.11	2.21	1.22	2.28	1.39
46.0	1.28	0.47	1.45	0.54	1.53	0.62	1.64	0.70	1.75	0.76	1.81	0.87

Model: ASEH09KGTG

Outdoor temperature	Indoor temperature (°CDB / °CWB)											
	18.0 / 12.0		21.0 / 15.0		23.0 / 16.0		27.0 / 19.0		29.0 / 21.0		32.0 / 23.0	
(°CDB)	TC	SHC	TC	SHC	TC	SHC	TC	SHC	TC	SHC	TC	SHC
-10.0	2.51	1.41	2.84	1.61	2.99	1.85	3.20	2.08	3.42	2.27	3.53	2.61
-5.0	2.51	1.41	2.84	1.61	2.99	1.85	3.20	2.08	3.42	2.27	3.53	2.61
0.0	2.51	1.41	2.84	1.61	2.99	1.85	3.20	2.08	3.42	2.27	3.53	2.61
5.0	2.51	1.41	2.84	1.61	2.99	1.85	3.20	2.08	3.42	2.27	3.53	2.61
10.0	2.51	1.41	2.84	1.61	2.99	1.85	3.20	2.08	3.42	2.27	3.53	2.61
15.0	2.51	1.41	2.84	1.61	2.99	1.85	3.20	2.08	3.42	2.27	3.53	2.61
20.0	2.51	1.41	2.84	1.61	2.99	1.85	3.20	2.08	3.42	2.27	3.53	2.61
25.0	2.51	1.41	2.84	1.61	2.99	1.85	3.20	2.08	3.42	2.27	3.53	2.61
30.0	2.51	1.41	2.84	1.61	2.99	1.85	3.20	2.08	3.42	2.27	3.53	2.61
35.0	2.51	1.41	2.84	1.61	2.99	1.85	3.20	2.08	3.42	2.27	3.53	2.61
40.0	2.08	0.97	2.35	1.10	2.47	1.27	2.65	1.42	2.83	1.56	2.92	1.79
46.0	1.64	0.61	1.86	0.69	1.96	0.79	2.10	0.89	2.24	0.98	2.31	1.12

Model: ASEH12KGTG

Outdoor temperature	Indoor temperature (°CDB / °CWB)											
	18.0 / 12.0		21.0 / 15.0		23.0 / 16.0		27.0 / 19.0		29.0 / 21.0		32.0 / 23.0	
(°CDB)	TC	SHC	TC	SHC	TC	SHC	TC	SHC	TC	SHC	TC	SHC
-10.0	3.37	1.90	3.81	2.16	4.02	2.49	4.30	2.80	4.60	3.06	4.74	3.50
-5.0	3.37	1.90	3.81	2.16	4.02	2.49	4.30	2.80	4.60	3.06	4.74	3.50
0.0	3.37	1.90	3.81	2.16	4.02	2.49	4.30	2.80	4.60	3.06	4.74	3.50
5.0	3.37	1.90	3.81	2.16	4.02	2.49	4.30	2.80	4.60	3.06	4.74	3.50
10.0	3.37	1.90	3.81	2.16	4.02	2.49	4.30	2.80	4.60	3.06	4.74	3.50
15.0	3.37	1.90	3.81	2.16	4.02	2.49	4.30	2.80	4.60	3.06	4.74	3.50
20.0	3.37	1.90	3.81	2.16	4.02	2.49	4.30	2.80	4.60	3.06	4.74	3.50
25.0	3.37	1.90	3.81	2.16	4.02	2.49	4.30	2.80	4.60	3.06	4.74	3.50
30.0	3.37	1.90	3.81	2.16	4.02	2.49	4.30	2.80	4.60	3.06	4.74	3.50
35.0	3.37	1.90	3.81	2.16	4.02	2.49	4.30	2.80	4.60	3.06	4.74	3.50
40.0	2.79	1.30	3.15	1.48	3.32	1.70	3.56	1.91	3.80	2.09	3.92	2.40
46.0	2.21	0.81	2.50	0.93	2.63	1.07	2.82	1.20	3.01	1.31	3.11	1.50

Model: ASEH14KGTG

Outdoor temperature	Indoor temperature (°CDB / °CWB)											
	18.0 / 12.0		21.0 / 15.0		23.0 / 16.0		27.0 / 19.0		29.0 / 21.0		32.0 / 23.0	
(°CDB)	TC	SHC	TC	SHC	TC	SHC	TC	SHC	TC	SHC	TC	SHC
-10.0	3.92	2.20	4.43	2.51	4.67	2.89	5.00	3.25	5.35	3.55	5.51	4.07
-5.0	3.92	2.20	4.43	2.51	4.67	2.89	5.00	3.25	5.35	3.55	5.51	4.07
0.0	3.92	2.20	4.43	2.51	4.67	2.89	5.00	3.25	5.35	3.55	5.51	4.07
5.0	3.92	2.20	4.43	2.51	4.67	2.89	5.00	3.25	5.35	3.55	5.51	4.07
10.0	3.92	2.20	4.43	2.51	4.67	2.89	5.00	3.25	5.35	3.55	5.51	4.07
15.0	3.92	2.20	4.43	2.51	4.67	2.89	5.00	3.25	5.35	3.55	5.51	4.07
20.0	3.92	2.20	4.43	2.51	4.67	2.89	5.00	3.25	5.35	3.55	5.51	4.07
25.0	3.92	2.20	4.43	2.51	4.67	2.89	5.00	3.25	5.35	3.55	5.51	4.07
30.0	3.92	2.20	4.43	2.51	4.67	2.89	5.00	3.25	5.35	3.55	5.51	4.07
35.0	3.92	2.20	4.43	2.51	4.67	2.89	5.00	3.25	5.35	3.55	5.51	4.07
40.0	3.24	1.51	3.67	1.72	3.87	1.98	4.14	2.23	4.42	2.43	4.56	2.79
46.0	2.57	0.95	2.90	1.08	3.06	1.24	3.28	1.40	3.50	1.53	3.61	1.75

Model: ASEH05KNCA

Outdoor temperature	Indoor temperature (°CDB / °CWB)											
	18.0 / 12.0		21.0 / 15.0		23.0 / 16.0		27.0 / 19.0		29.0 / 21.0		32.0 / 23.0	
(°CDB)	TC	SHC	TC	SHC	TC	SHC	TC	SHC	TC	SHC	TC	SHC
-10.0	1.41	0.79	1.59	0.90	1.68	1.04	1.80	1.17	1.92	1.28	1.98	1.47
-5.0	1.41	0.79	1.59	0.90	1.68	1.04	1.80	1.17	1.92	1.28	1.98	1.47
0.0	1.41	0.79	1.59	0.90	1.68	1.04	1.80	1.17	1.92	1.28	1.98	1.47
5.0	1.41	0.79	1.59	0.90	1.68	1.04	1.80	1.17	1.92	1.28	1.98	1.47
10.0	1.41	0.79	1.59	0.90	1.68	1.04	1.80	1.17	1.92	1.28	1.98	1.47
15.0	1.41	0.79	1.59	0.90	1.68	1.04	1.80	1.17	1.92	1.28	1.98	1.47
20.0	1.41	0.79	1.59	0.90	1.68	1.04	1.80	1.17	1.92	1.28	1.98	1.47
25.0	1.41	0.79	1.59	0.90	1.68	1.04	1.80	1.17	1.92	1.28	1.98	1.47
30.0	1.41	0.79	1.59	0.90	1.68	1.04	1.80	1.17	1.92	1.28	1.98	1.47
35.0	1.41	0.79	1.59	0.90	1.68	1.04	1.80	1.17	1.92	1.28	1.98	1.47
40.0	1.17	0.54	1.32	0.62	1.39	0.71	1.49	0.80	1.59	0.88	1.64	1.00
46.0	0.92	0.34	1.05	0.39	1.10	0.45	1.18	0.50	1.26	0.55	1.30	0.63

Model: ASEH07KNCA

Outdoor temperature	Indoor temperature (°CDB / °CWB)											
	18.0 / 12.0		21.0 / 15.0		23.0 / 16.0		27.0 / 19.0		29.0 / 21.0		32.0 / 23.0	
(°CDB)	TC	SHC	TC	SHC	TC	SHC	TC	SHC	TC	SHC	TC	SHC
-10.0	1.96	1.10	2.22	1.26	2.34	1.45	2.50	1.63	2.67	1.78	2.76	2.04
-5.0	1.96	1.10	2.22	1.26	2.34	1.45	2.50	1.63	2.67	1.78	2.76	2.04
0.0	1.96	1.10	2.22	1.26	2.34	1.45	2.50	1.63	2.67	1.78	2.76	2.04
5.0	1.96	1.10	2.22	1.26	2.34	1.45	2.50	1.63	2.67	1.78	2.76	2.04
10.0	1.96	1.10	2.22	1.26	2.34	1.45	2.50	1.63	2.67	1.78	2.76	2.04
15.0	1.96	1.10	2.22	1.26	2.34	1.45	2.50	1.63	2.67	1.78	2.76	2.04
20.0	1.96	1.10	2.22	1.26	2.34	1.45	2.50	1.63	2.67	1.78	2.76	2.04
25.0	1.96	1.10	2.22	1.26	2.34	1.45	2.50	1.63	2.67	1.78	2.76	2.04
30.0	1.96	1.10	2.22	1.26	2.34	1.45	2.50	1.63	2.67	1.78	2.76	2.04
35.0	1.96	1.10	2.22	1.26	2.34	1.45	2.50	1.63	2.67	1.78	2.76	2.04
40.0	1.62	0.75	1.83	0.86	1.93	0.99	2.07	1.11	2.21	1.22	2.28	1.39
46.0	1.28	0.47	1.45	0.54	1.53	0.62	1.64	0.70	1.75	0.76	1.81	0.87

Model: ASEH09KNCA

Outdoor temperature	Indoor temperature (°CDB / °CWB)											
	18.0 / 12.0		21.0 / 15.0		23.0 / 16.0		27.0 / 19.0		29.0 / 21.0		32.0 / 23.0	
(°CDB)	TC	SHC	TC	SHC	TC	SHC	TC	SHC	TC	SHC	TC	SHC
-10.0	2.51	1.41	2.84	1.61	2.99	1.85	3.20	2.08	3.42	2.27	3.53	2.61
-5.0	2.51	1.41	2.84	1.61	2.99	1.85	3.20	2.08	3.42	2.27	3.53	2.61
0.0	2.51	1.41	2.84	1.61	2.99	1.85	3.20	2.08	3.42	2.27	3.53	2.61
5.0	2.51	1.41	2.84	1.61	2.99	1.85	3.20	2.08	3.42	2.27	3.53	2.61
10.0	2.51	1.41	2.84	1.61	2.99	1.85	3.20	2.08	3.42	2.27	3.53	2.61
15.0	2.51	1.41	2.84	1.61	2.99	1.85	3.20	2.08	3.42	2.27	3.53	2.61
20.0	2.51	1.41	2.84	1.61	2.99	1.85	3.20	2.08	3.42	2.27	3.53	2.61
25.0	2.51	1.41	2.84	1.61	2.99	1.85	3.20	2.08	3.42	2.27	3.53	2.61
30.0	2.51	1.41	2.84	1.61	2.99	1.85	3.20	2.08	3.42	2.27	3.53	2.61
35.0	2.51	1.41	2.84	1.61	2.99	1.85	3.20	2.08	3.42	2.27	3.53	2.61
40.0	2.08	0.97	2.35	1.10	2.47	1.27	2.65	1.42	2.83	1.56	2.92	1.79
46.0	1.64	0.61	1.86	0.69	1.96	0.79	2.10	0.89	2.24	0.98	2.31	1.12

Model: ASEH12KNCA

Outdoor temperature	Indoor temperature (°CDB / °CWB)											
	18.0 / 12.0		21.0 / 15.0		23.0 / 16.0		27.0 / 19.0		29.0 / 21.0		32.0 / 23.0	
(°CDB)	TC	SHC	TC	SHC	TC	SHC	TC	SHC	TC	SHC	TC	SHC
-10.0	2.82	1.59	3.19	1.81	3.36	2.08	3.60	2.34	3.85	2.56	3.97	2.93
-5.0	2.82	1.59	3.19	1.81	3.36	2.08	3.60	2.34	3.85	2.56	3.97	2.93
0.0	2.82	1.59	3.19	1.81	3.36	2.08	3.60	2.34	3.85	2.56	3.97	2.93
5.0	2.82	1.59	3.19	1.81	3.36	2.08	3.60	2.34	3.85	2.56	3.97	2.93
10.0	2.82	1.59	3.19	1.81	3.36	2.08	3.60	2.34	3.85	2.56	3.97	2.93
15.0	2.82	1.59	3.19	1.81	3.36	2.08	3.60	2.34	3.85	2.56	3.97	2.93
20.0	2.82	1.59	3.19	1.81	3.36	2.08	3.60	2.34	3.85	2.56	3.97	2.93
25.0	2.82	1.59	3.19	1.81	3.36	2.08	3.60	2.34	3.85	2.56	3.97	2.93
30.0	2.82	1.59	3.19	1.81	3.36	2.08	3.60	2.34	3.85	2.56	3.97	2.93
35.0	2.82	1.59	3.19	1.81	3.36	2.08	3.60	2.34	3.85	2.56	3.97	2.93
40.0	2.34	1.09	2.64	1.24	2.78	1.43	2.98	1.60	3.19	1.75	3.28	2.01
46.0	1.85	0.68	2.09	0.78	2.20	0.89	2.36	1.00	2.52	1.10	2.60	1.26

Model: ASEG18KMTE

Outdoor temperature	Indoor temperature (°CDB / °CWB)											
	18.0 / 12.0		21.0 / 15.0		23.0 / 16.0		27.0 / 19.0		29.0 / 21.0		32.0 / 23.0	
(°CDB)	TC	SHC	TC	SHC	TC	SHC	TC	SHC	TC	SHC	TC	SHC
-10.0	4.75	3.21	5.37	3.65	5.66	4.21	6.06	4.73	6.48	5.17	6.68	5.92
-5.0	4.75	3.21	5.37	3.65	5.66	4.21	6.06	4.73	6.48	5.17	6.68	5.92
0.0	4.75	3.21	5.37	3.65	5.66	4.21	6.06	4.73	6.48	5.17	6.68	5.92
5.0	4.75	3.21	5.37	3.65	5.66	4.21	6.06	4.73	6.48	5.17	6.68	5.92
10.0	4.75	3.21	5.37	3.65	5.66	4.21	6.06	4.73	6.48	5.17	6.68	5.92
15.0	4.75	3.21	5.37	3.65	5.66	4.21	6.06	4.73	6.48	5.17	6.68	5.92
20.0	4.75	3.21	5.37	3.65	5.66	4.21	6.06	4.73	6.48	5.17	6.68	5.92
25.0	4.75	3.21	5.37	3.65	5.66	4.21	6.06	4.73	6.48	5.17	6.68	5.92
30.0	4.75	3.21	5.37	3.65	5.66	4.21	6.06	4.73	6.48	5.17	6.68	5.92
35.0	4.75	3.21	5.37	3.65	5.66	4.21	6.06	4.73	6.48	5.17	6.68	5.92
40.0	3.93	2.20	4.44	2.50	4.68	2.88	5.02	3.24	5.36	3.54	5.53	4.06
46.0	3.11	1.38	3.52	1.57	3.71	1.81	3.97	2.03	4.25	2.22	4.38	2.54

Model: ASEG22KMTE

Outdoor temperature	Indoor temperature (°CDB / °CWB)											
	18.0 / 12.0		21.0 / 15.0		23.0 / 16.0		27.0 / 19.0		29.0 / 21.0		32.0 / 23.0	
(°CDB)	TC	SHC	TC	SHC	TC	SHC	TC	SHC	TC	SHC	TC	SHC
-10.0	6.01	3.86	6.79	4.40	7.15	5.07	7.66	5.69	8.19	6.23	8.44	7.13
-5.0	6.01	3.86	6.79	4.40	7.15	5.07	7.66	5.69	8.19	6.23	8.44	7.13
0.0	6.01	3.86	6.79	4.40	7.15	5.07	7.66	5.69	8.19	6.23	8.44	7.13
5.0	6.01	3.86	6.79	4.40	7.15	5.07	7.66	5.69	8.19	6.23	8.44	7.13
10.0	6.01	3.86	6.79	4.40	7.15	5.07	7.66	5.69	8.19	6.23	8.44	7.13
15.0	6.01	3.86	6.79	4.40	7.15	5.07	7.66	5.69	8.19	6.23	8.44	7.13
20.0	6.01	3.86	6.79	4.40	7.15	5.07	7.66	5.69	8.19	6.23	8.44	7.13
25.0	6.01	3.86	6.79	4.40	7.15	5.07	7.66	5.69	8.19	6.23	8.44	7.13
30.0	6.01	3.86	6.79	4.40	7.15	5.07	7.66	5.69	8.19	6.23	8.44	7.13
35.0	6.01	3.86	6.79	4.40	7.15	5.07	7.66	5.69	8.19	6.23	8.44	7.13
40.0	4.97	2.64	5.62	3.02	5.92	3.47	6.34	3.90	6.78	4.27	6.99	4.89
46.0	3.94	1.66	4.45	1.89	4.69	2.18	5.02	2.44	5.37	2.67	5.53	3.06

Model: ASEG24KMTE

Outdoor temperature	Indoor temperature (°CDB / °CWB)											
	18.0 / 12.0		21.0 / 15.0		23.0 / 16.0		27.0 / 19.0		29.0 / 21.0		32.0 / 23.0	
(°CDB)	TC	SHC	TC	SHC	TC	SHC	TC	SHC	TC	SHC	TC	SHC
-10.0	6.13	3.96	6.93	4.51	7.30	5.20	7.82	5.84	8.36	6.38	8.62	7.31
-5.0	6.13	3.96	6.93	4.51	7.30	5.20	7.82	5.84	8.36	6.38	8.62	7.31
0.0	6.13	3.96	6.93	4.51	7.30	5.20	7.82	5.84	8.36	6.38	8.62	7.31
5.0	6.13	3.96	6.93	4.51	7.30	5.20	7.82	5.84	8.36	6.38	8.62	7.31
10.0	6.13	3.96	6.93	4.51	7.30	5.20	7.82	5.84	8.36	6.38	8.62	7.31
15.0	6.13	3.96	6.93	4.51	7.30	5.20	7.82	5.84	8.36	6.38	8.62	7.31
20.0	6.13	3.96	6.93	4.51	7.30	5.20	7.82	5.84	8.36	6.38	8.62	7.31
25.0	6.13	3.96	6.93	4.51	7.30	5.20	7.82	5.84	8.36	6.38	8.62	7.31
30.0	6.13	3.96	6.93	4.51	7.30	5.20	7.82	5.84	8.36	6.38	8.62	7.31
35.0	6.13	3.96	6.93	4.51	7.30	5.20	7.82	5.84	8.36	6.38	8.62	7.31
40.0	5.07	2.71	5.73	3.09	6.05	3.56	6.47	4.00	6.92	4.37	7.13	5.01
46.0	4.02	1.70	4.54	1.94	4.79	2.23	5.12	2.51	5.48	2.74	5.65	3.14

NOTES:

- TC: Total Capacity (kW), SHC: Sensible Heat Capacity (kW)
- Values mentioned in the table are based on the following conditions:
  - Pipe length: 5 m, Height difference: 0 m (Outdoor unit—Indoor unit)

● Ceiling type

Model: ABEG18KRTA

Outdoor temperature	Indoor temperature (°CDB / °CWB)											
	18.0 / 12.0		21.0 / 15.0		23.0 / 16.0		27.0 / 19.0		29.0 / 21.0		32.0 / 23.0	
(°CDB)	TC	SHC	TC	SHC	TC	SHC	TC	SHC	TC	SHC	TC	SHC
-10.0	4.75	2.96	5.37	3.37	5.66	3.88	6.06	4.36	6.48	4.77	6.68	5.47
-5.0	4.75	2.96	5.37	3.37	5.66	3.88	6.06	4.36	6.48	4.77	6.68	5.47
0.0	4.75	2.96	5.37	3.37	5.66	3.88	6.06	4.36	6.48	4.77	6.68	5.47
5.0	4.75	2.96	5.37	3.37	5.66	3.88	6.06	4.36	6.48	4.77	6.68	5.47
10.0	4.75	2.96	5.37	3.37	5.66	3.88	6.06	4.36	6.48	4.77	6.68	5.47
15.0	4.75	2.96	5.37	3.37	5.66	3.88	6.06	4.36	6.48	4.77	6.68	5.47
20.0	4.75	2.96	5.37	3.37	5.66	3.88	6.06	4.36	6.48	4.77	6.68	5.47
25.0	4.75	2.96	5.37	3.37	5.66	3.88	6.06	4.36	6.48	4.77	6.68	5.47
30.0	4.75	2.96	5.37	3.37	5.66	3.88	6.06	4.36	6.48	4.77	6.68	5.47
35.0	4.75	2.96	5.37	3.37	5.66	3.88	6.06	4.36	6.48	4.77	6.68	5.47
40.0	3.93	2.03	4.44	2.31	4.68	2.66	5.02	2.99	5.36	3.27	5.53	3.75
46.0	3.11	1.27	3.52	1.45	3.71	1.67	3.97	1.87	4.25	2.05	4.38	2.35

Model: ABEG22KRTA

Outdoor temperature	Indoor temperature (°CDB / °CWB)											
	18.0 / 12.0		21.0 / 15.0		23.0 / 16.0		27.0 / 19.0		29.0 / 21.0		32.0 / 23.0	
(°CDB)	TC	SHC	TC	SHC	TC	SHC	TC	SHC	TC	SHC	TC	SHC
-10.0	6.01	3.73	6.79	4.25	7.15	4.90	7.66	5.50	8.19	6.02	8.44	6.90
-5.0	6.01	3.73	6.79	4.25	7.15	4.90	7.66	5.50	8.19	6.02	8.44	6.90
0.0	6.01	3.73	6.79	4.25	7.15	4.90	7.66	5.50	8.19	6.02	8.44	6.90
5.0	6.01	3.73	6.79	4.25	7.15	4.90	7.66	5.50	8.19	6.02	8.44	6.90
10.0	6.01	3.73	6.79	4.25	7.15	4.90	7.66	5.50	8.19	6.02	8.44	6.90
15.0	6.01	3.73	6.79	4.25	7.15	4.90	7.66	5.50	8.19	6.02	8.44	6.90
20.0	6.01	3.73	6.79	4.25	7.15	4.90	7.66	5.50	8.19	6.02	8.44	6.90
25.0	6.01	3.73	6.79	4.25	7.15	4.90	7.66	5.50	8.19	6.02	8.44	6.90
30.0	6.01	3.73	6.79	4.25	7.15	4.90	7.66	5.50	8.19	6.02	8.44	6.90
35.0	6.01	3.73	6.79	4.25	7.15	4.90	7.66	5.50	8.19	6.02	8.44	6.90
40.0	4.97	2.56	5.62	2.91	5.92	3.35	6.34	3.77	6.78	4.12	6.99	4.72
46.0	3.94	1.60	4.45	1.83	4.69	2.10	5.02	2.36	5.37	2.58	5.53	2.96

NOTES:

- TC: Total Capacity (kW), SHC: Sensible Heat Capacity (kW)
- Values mentioned in the table are based on the following conditions:
  - Pipe length: 5 m, Height difference: 0 m (Outdoor unit—Indoor unit)

● Floor type

Model: AGEG09KVCA

Outdoor temperature	Indoor temperature (°CDB / °CWB)											
	18.0 / 12.0		21.0 / 15.0		23.0 / 16.0		27.0 / 19.0		29.0 / 21.0		32.0 / 23.0	
(°CDB)	TC	SHC	TC	SHC	TC	SHC	TC	SHC	TC	SHC	TC	SHC
-10.0	2.51	1.71	2.84	1.95	2.99	2.25	3.20	2.53	3.42	2.76	3.53	3.17
-5.0	2.51	1.71	2.84	1.95	2.99	2.25	3.20	2.53	3.42	2.76	3.53	3.17
0.0	2.51	1.71	2.84	1.95	2.99	2.25	3.20	2.53	3.42	2.76	3.53	3.17
5.0	2.51	1.71	2.84	1.95	2.99	2.25	3.20	2.53	3.42	2.76	3.53	3.17
10.0	2.51	1.71	2.84	1.95	2.99	2.25	3.20	2.53	3.42	2.76	3.53	3.17
15.0	2.51	1.71	2.84	1.95	2.99	2.25	3.20	2.53	3.42	2.76	3.53	3.17
20.0	2.51	1.71	2.84	1.95	2.99	2.25	3.20	2.53	3.42	2.76	3.53	3.17
25.0	2.51	1.71	2.84	1.95	2.99	2.25	3.20	2.53	3.42	2.76	3.53	3.17
30.0	2.51	1.71	2.84	1.95	2.99	2.25	3.20	2.53	3.42	2.76	3.53	3.17
35.0	2.51	1.71	2.84	1.95	2.99	2.25	3.20	2.53	3.42	2.76	3.53	3.17
40.0	2.08	1.17	2.35	1.34	2.47	1.54	2.65	1.73	2.83	1.89	2.92	2.17
46.0	1.64	0.74	1.86	0.84	1.96	0.97	2.10	1.09	2.24	1.19	2.31	1.36

Model: AGEG12KVCA

Outdoor temperature	Indoor temperature (°CDB / °CWB)											
	18.0 / 12.0		21.0 / 15.0		23.0 / 16.0		27.0 / 19.0		29.0 / 21.0		32.0 / 23.0	
(°CDB)	TC	SHC	TC	SHC	TC	SHC	TC	SHC	TC	SHC	TC	SHC
-10.0	3.37	2.16	3.81	2.46	4.02	2.83	4.30	3.18	4.60	3.48	4.74	3.99
-5.0	3.37	2.16	3.81	2.46	4.02	2.83	4.30	3.18	4.60	3.48	4.74	3.99
0.0	3.37	2.16	3.81	2.46	4.02	2.83	4.30	3.18	4.60	3.48	4.74	3.99
5.0	3.37	2.16	3.81	2.46	4.02	2.83	4.30	3.18	4.60	3.48	4.74	3.99
10.0	3.37	2.16	3.81	2.46	4.02	2.83	4.30	3.18	4.60	3.48	4.74	3.99
15.0	3.37	2.16	3.81	2.46	4.02	2.83	4.30	3.18	4.60	3.48	4.74	3.99
20.0	3.37	2.16	3.81	2.46	4.02	2.83	4.30	3.18	4.60	3.48	4.74	3.99
25.0	3.37	2.16	3.81	2.46	4.02	2.83	4.30	3.18	4.60	3.48	4.74	3.99
30.0	3.37	2.16	3.81	2.46	4.02	2.83	4.30	3.18	4.60	3.48	4.74	3.99
35.0	3.37	2.16	3.81	2.46	4.02	2.83	4.30	3.18	4.60	3.48	4.74	3.99
40.0	2.79	1.48	3.15	1.69	3.32	1.94	3.56	2.18	3.80	2.38	3.92	2.73
46.0	2.21	0.93	2.50	1.06	2.63	1.22	2.82	1.37	3.01	1.49	3.11	1.71

Model: AGEG14KVCA

Outdoor temperature	Indoor temperature (°CDB / °CWB)											
	18.0 / 12.0		21.0 / 15.0		23.0 / 16.0		27.0 / 19.0		29.0 / 21.0		32.0 / 23.0	
(°CDB)	TC	SHC	TC	SHC	TC	SHC	TC	SHC	TC	SHC	TC	SHC
-10.0	3.92	2.44	4.43	2.78	4.67	3.20	5.00	3.60	5.35	3.94	5.51	4.51
-5.0	3.92	2.44	4.43	2.78	4.67	3.20	5.00	3.60	5.35	3.94	5.51	4.51
0.0	3.92	2.44	4.43	2.78	4.67	3.20	5.00	3.60	5.35	3.94	5.51	4.51
5.0	3.92	2.44	4.43	2.78	4.67	3.20	5.00	3.60	5.35	3.94	5.51	4.51
10.0	3.92	2.44	4.43	2.78	4.67	3.20	5.00	3.60	5.35	3.94	5.51	4.51
15.0	3.92	2.44	4.43	2.78	4.67	3.20	5.00	3.60	5.35	3.94	5.51	4.51
20.0	3.92	2.44	4.43	2.78	4.67	3.20	5.00	3.60	5.35	3.94	5.51	4.51
25.0	3.92	2.44	4.43	2.78	4.67	3.20	5.00	3.60	5.35	3.94	5.51	4.51
30.0	3.92	2.44	4.43	2.78	4.67	3.20	5.00	3.60	5.35	3.94	5.51	4.51
35.0	3.92	2.44	4.43	2.78	4.67	3.20	5.00	3.60	5.35	3.94	5.51	4.51
40.0	3.24	1.67	3.67	1.91	3.87	2.19	4.14	2.47	4.42	2.70	4.56	3.09
46.0	2.57	1.05	2.90	1.20	3.06	1.38	3.28	1.55	3.50	1.69	3.61	1.94

NOTES:

- TC: Total Capacity (kW), SHC: Sensible Heat Capacity (kW)
- Values mentioned in the table are based on the following conditions:
  - Pipe length: 5 m, Height difference: 0 m (Outdoor unit—Indoor unit)

6-3. Heating capacity

NOTE: Values mentioned in the table are calculated based on the maximum capacity.

■ Model: AOEG30KBTA4

Indoor unit connecting capacity	Outdoor temperature		Indoor temperature									
			16.0 °CDB		18.0 °CDB		20.0 °CDB		22.0 °CDB		24.0 °CDB	
kBtu/h	°CDB	°CWB	TC	IP	TC	IP	TC	IP	TC	IP	TC	IP
49	-15.0	-16.0	6.1	2.96	6.0	3.02	5.9	3.08	5.7	3.14	5.6	3.20
	-10.0	-11.0	7.6	3.24	7.5	3.31	7.3	3.38	7.1	3.45	6.9	3.51
	-5.0	-7.0	9.1	3.13	8.9	3.20	8.7	3.26	8.4	3.33	8.2	3.39
	0.0	-2.0	10.7	3.35	10.4	3.42	10.2	3.49	9.9	3.56	9.7	3.63
	5.0	3.0	11.8	3.21	11.5	3.27	11.2	3.34	10.9	3.41	10.6	3.47
	7.0	6.0	11.8	2.91	11.5	2.97	11.2	3.03	10.9	3.09	10.6	3.15
	10.0	8.0	11.8	2.80	11.5	2.86	11.2	2.92	10.9	2.98	10.6	3.04
	15.0	10.0	11.8	2.44	11.5	2.50	11.2	2.55	10.9	2.60	10.6	2.65
	20.0	15.0	11.8	2.06	11.5	2.10	11.2	2.14	10.9	2.19	10.6	2.23
	24.0	18.0	11.8	1.87	11.5	1.91	11.2	1.94	10.9	1.98	10.6	2.02
48	-15.0	-16.0	6.1	2.96	6.0	3.02	5.9	3.08	5.7	3.14	5.6	3.20
	-10.0	-11.0	7.6	3.24	7.5	3.31	7.3	3.38	7.1	3.45	6.9	3.51
	-5.0	-7.0	9.1	3.13	8.9	3.20	8.7	3.26	8.4	3.33	8.2	3.39
	0.0	-2.0	10.7	3.35	10.4	3.42	10.2	3.49	9.9	3.56	9.7	3.63
	5.0	3.0	11.8	3.21	11.5	3.27	11.2	3.34	10.9	3.41	10.6	3.47
	7.0	6.0	11.8	2.91	11.5	2.97	11.2	3.03	10.9	3.09	10.6	3.15
	10.0	8.0	11.8	2.80	11.5	2.86	11.2	2.92	10.9	2.98	10.6	3.04
	15.0	10.0	11.8	2.44	11.5	2.50	11.2	2.55	10.9	2.60	10.6	2.65
	20.0	15.0	11.8	2.06	11.5	2.10	11.2	2.14	10.9	2.19	10.6	2.23
	24.0	18.0	11.8	1.87	11.5	1.91	11.2	1.94	10.9	1.98	10.6	2.02
47	-15.0	-16.0	6.1	2.96	6.0	3.02	5.9	3.08	5.7	3.14	5.6	3.20
	-10.0	-11.0	7.6	3.24	7.5	3.31	7.3	3.38	7.1	3.45	6.9	3.51
	-5.0	-7.0	9.1	3.13	8.9	3.20	8.7	3.26	8.4	3.33	8.2	3.39
	0.0	-2.0	10.7	3.35	10.4	3.42	10.2	3.49	9.9	3.56	9.7	3.63
	5.0	3.0	11.8	3.21	11.5	3.27	11.2	3.34	10.9	3.41	10.6	3.47
	7.0	6.0	11.8	2.91	11.5	2.97	11.2	3.03	10.9	3.09	10.6	3.15
	10.0	8.0	11.8	2.80	11.5	2.86	11.2	2.92	10.9	2.98	10.6	3.04
	15.0	10.0	11.8	2.44	11.5	2.50	11.2	2.55	10.9	2.60	10.6	2.65
	20.0	15.0	11.8	2.06	11.5	2.10	11.2	2.14	10.9	2.19	10.6	2.23
	24.0	18.0	11.8	1.87	11.5	1.91	11.2	1.94	10.9	1.98	10.6	2.02
46	-15.0	-16.0	6.1	2.96	6.0	3.02	5.9	3.08	5.7	3.14	5.6	3.20
	-10.0	-11.0	7.6	3.24	7.5	3.31	7.3	3.38	7.1	3.45	6.9	3.51
	-5.0	-7.0	9.1	3.13	8.9	3.20	8.7	3.26	8.4	3.33	8.2	3.39
	0.0	-2.0	10.7	3.35	10.4	3.42	10.2	3.49	9.9	3.56	9.7	3.63
	5.0	3.0	11.8	3.21	11.5	3.27	11.2	3.34	10.9	3.41	10.6	3.47
	7.0	6.0	11.8	2.91	11.5	2.97	11.2	3.03	10.9	3.09	10.6	3.15
	10.0	8.0	11.8	2.80	11.5	2.86	11.2	2.92	10.9	2.98	10.6	3.04
	15.0	10.0	11.8	2.44	11.5	2.50	11.2	2.55	10.9	2.60	10.6	2.65
	20.0	15.0	11.8	2.06	11.5	2.10	11.2	2.14	10.9	2.19	10.6	2.23
	24.0	18.0	11.8	1.87	11.5	1.91	11.2	1.94	10.9	1.98	10.6	2.02
45	-15.0	-16.0	6.1	2.96	6.0	3.02	5.9	3.08	5.7	3.14	5.6	3.20
	-10.0	-11.0	7.6	3.24	7.5	3.31	7.3	3.38	7.1	3.45	6.9	3.51
	-5.0	-7.0	9.1	3.13	8.9	3.20	8.7	3.26	8.4	3.33	8.2	3.39
	0.0	-2.0	10.7	3.35	10.4	3.42	10.2	3.49	9.9	3.56	9.7	3.63
	5.0	3.0	11.8	3.21	11.5	3.27	11.2	3.34	10.9	3.41	10.6	3.47
	7.0	6.0	11.8	2.91	11.5	2.97	11.2	3.03	10.9	3.09	10.6	3.15
	10.0	8.0	11.8	2.80	11.5	2.86	11.2	2.92	10.9	2.98	10.6	3.04
	15.0	10.0	11.8	2.44	11.5	2.50	11.2	2.55	10.9	2.60	10.6	2.65
	20.0	15.0	11.8	2.06	11.5	2.10	11.2	2.14	10.9	2.19	10.6	2.23
	24.0	18.0	11.8	1.87	11.5	1.91	11.2	1.94	10.9	1.98	10.6	2.02
44	-15.0	-16.0	6.1	2.96	6.0	3.02	5.9	3.08	5.7	3.14	5.6	3.20
	-10.0	-11.0	7.6	3.24	7.5	3.31	7.3	3.38	7.1	3.45	6.9	3.51
	-5.0	-7.0	9.1	3.13	8.9	3.20	8.7	3.26	8.4	3.33	8.2	3.39
	0.0	-2.0	10.7	3.35	10.4	3.42	10.2	3.49	9.9	3.56	9.7	3.63
	5.0	3.0	11.8	3.21	11.5	3.27	11.2	3.34	10.9	3.41	10.6	3.47
	7.0	6.0	11.8	2.91	11.5	2.97	11.2	3.03	10.9	3.09	10.6	3.15
	10.0	8.0	11.8	2.80	11.5	2.86	11.2	2.92	10.9	2.98	10.6	3.04
	15.0	10.0	11.8	2.44	11.5	2.50	11.2	2.55	10.9	2.60	10.6	2.65
	20.0	15.0	11.8	2.06	11.5	2.10	11.2	2.14	10.9	2.19	10.6	2.23
	24.0	18.0	11.8	1.87	11.5	1.91	11.2	1.94	10.9	1.98	10.6	2.02
43	-15.0	-16.0	6.1	2.96	6.0	3.02	5.9	3.08	5.7	3.14	5.6	3.20
	-10.0	-11.0	7.6	3.24	7.5	3.31	7.3	3.38	7.1	3.45	6.9	3.51
	-5.0	-7.0	9.1	3.13	8.9	3.20	8.7	3.26	8.4	3.33	8.2	3.39
	0.0	-2.0	10.7	3.35	10.4	3.42	10.2	3.49	9.9	3.56	9.7	3.63
	5.0	3.0	11.8	3.21	11.5	3.27	11.2	3.34	10.9	3.41	10.6	3.47
	7.0	6.0	11.8	2.91	11.5	2.97	11.2	3.03	10.9	3.09	10.6	3.15
	10.0	8.0	11.8	2.80	11.5	2.86	11.2	2.92	10.9	2.98	10.6	3.04
	15.0	10.0	11.8	2.44	11.5	2.50	11.2	2.55	10.9	2.60	10.6	2.65
	20.0	15.0	11.8	2.06	11.5	2.10	11.2	2.14	10.9	2.19	10.6	2.23
	24.0	18.0	11.8	1.87	11.5	1.91	11.2	1.94	10.9	1.98	10.6	2.02
42	-15.0	-16.0	6.1	2.96	6.0	3.02	5.9	3.08	5.7	3.14	5.6	3.20
	-10.0	-11.0	7.6	3.24	7.5	3.31	7.3	3.38	7.1	3.45	6.9	3.51
	-5.0	-7.0	9.1	3.13	8.9	3.20	8.7	3.26	8.4	3.33	8.2	3.39
	0.0	-2.0	10.7	3.35	10.4	3.42	10.2	3.49	9.9	3.56	9.7	3.63
	5.0	3.0	11.8	3.21	11.5	3.27	11.2	3.34	10.9	3.41	10.6	3.47
	7.0	6.0	11.8	2.91	11.5	2.97	11.2	3.03	10.9	3.09	10.6	3.15
	10.0	8.0	11.8	2.80	11.5	2.86	11.2	2.92	10.9	2.98	10.6	3.04
	15.0	10.0	11.8	2.44	11.5	2.50	11.2	2.55	10.9	2.60	10.6	2.65
	20.0	15.0	11.8	2.06	11.5	2.10	11.2	2.14	10.9	2.19	10.6	2.23
	24.0	18.0	11.8	1.87	11.5	1.91	11.2	1.94	10.9	1.98	10.6	2.02

OUTDOOR UNIT
AOEG30KBTA4

Indoor unit connecting capacity	Outdoor temperature		Indoor temperature									
			16.0 °CDB		18.0 °CDB		20.0 °CDB		22.0 °CDB		24.0 °CDB	
kBtu/h	°CDB	°CWB	TC	IP	TC	IP	TC	IP	TC	IP	TC	IP
41	-15.0	-16.0	6.1	2.96	6.0	3.02	5.9	3.08	5.7	3.14	5.6	3.20
	-10.0	-11.0	7.6	3.24	7.5	3.31	7.3	3.38	7.1	3.45	6.9	3.51
	-5.0	-7.0	9.1	3.13	8.9	3.20	8.7	3.26	8.4	3.33	8.2	3.39
	0.0	-2.0	10.7	3.35	10.4	3.42	10.2	3.49	9.9	3.56	9.7	3.63
	5.0	3.0	11.8	3.21	11.5	3.27	11.2	3.34	10.9	3.41	10.6	3.47
	7.0	6.0	11.8	2.91	11.5	2.97	11.2	3.03	10.9	3.09	10.6	3.15
	10.0	8.0	11.8	2.80	11.5	2.86	11.2	2.92	10.9	2.98	10.6	3.04
	15.0	10.0	11.8	2.44	11.5	2.50	11.2	2.55	10.9	2.60	10.6	2.65
	20.0	15.0	11.8	2.06	11.5	2.10	11.2	2.14	10.9	2.19	10.6	2.23
	24.0	18.0	11.8	1.87	11.5	1.91	11.2	1.94	10.9	1.98	10.6	2.02
40	-15.0	-16.0	6.1	2.96	6.0	3.02	5.9	3.08	5.7	3.14	5.6	3.20
	-10.0	-11.0	7.6	3.24	7.5	3.31	7.3	3.38	7.1	3.45	6.9	3.51
	-5.0	-7.0	9.1	3.13	8.9	3.20	8.7	3.26	8.4	3.33	8.2	3.39
	0.0	-2.0	10.7	3.35	10.4	3.42	10.2	3.49	9.9	3.56	9.7	3.63
	5.0	3.0	11.8	3.21	11.5	3.27	11.2	3.34	10.9	3.41	10.6	3.47
	7.0	6.0	11.8	2.91	11.5	2.97	11.2	3.03	10.9	3.09	10.6	3.15
	10.0	8.0	11.8	2.80	11.5	2.86	11.2	2.92	10.9	2.98	10.6	3.04
	15.0	10.0	11.8	2.44	11.5	2.50	11.2	2.55	10.9	2.60	10.6	2.65
	20.0	15.0	11.8	2.06	11.5	2.10	11.2	2.14	10.9	2.19	10.6	2.23
	24.0	18.0	11.8	1.87	11.5	1.91	11.2	1.94	10.9	1.98	10.6	2.02
39	-15.0	-16.0	6.1	2.96	6.0	3.02	5.9	3.08	5.7	3.14	5.6	3.20
	-10.0	-11.0	7.6	3.24	7.5	3.31	7.3	3.38	7.1	3.45	6.9	3.51
	-5.0	-7.0	9.1	3.13	8.9	3.20	8.7	3.26	8.4	3.33	8.2	3.39
	0.0	-2.0	10.7	3.35	10.4	3.42	10.2	3.49	9.9	3.56	9.7	3.63
	5.0	3.0	11.8	3.21	11.5	3.27	11.2	3.34	10.9	3.41	10.6	3.47
	7.0	6.0	11.8	2.91	11.5	2.97	11.2	3.03	10.9	3.09	10.6	3.15
	10.0	8.0	11.8	2.80	11.5	2.86	11.2	2.92	10.9	2.98	10.6	3.04
	15.0	10.0	11.8	2.44	11.5	2.50	11.2	2.55	10.9	2.60	10.6	2.65
	20.0	15.0	11.8	2.06	11.5	2.10	11.2	2.14	10.9	2.19	10.6	2.23
	24.0	18.0	11.8	1.87	11.5	1.91	11.2	1.94	10.9	1.98	10.6	2.02
38	-15.0	-16.0	6.1	2.96	6.0	3.02	5.9	3.08	5.7	3.14	5.6	3.20
	-10.0	-11.0	7.6	3.24	7.5	3.31	7.3	3.38	7.1	3.45	6.9	3.51
	-5.0	-7.0	9.1	3.13	8.9	3.20	8.7	3.26	8.4	3.33	8.2	3.39
	0.0	-2.0	10.7	3.35	10.4	3.42	10.2	3.49	9.9	3.56	9.7	3.63
	5.0	3.0	11.8	3.21	11.5	3.27	11.2	3.34	10.9	3.41	10.6	3.47
	7.0	6.0	11.8	2.91	11.5	2.97	11.2	3.03	10.9	3.09	10.6	3.15
	10.0	8.0	11.8	2.80	11.5	2.86	11.2	2.92	10.9	2.98	10.6	3.04
	15.0	10.0	11.8	2.44	11.5	2.50	11.2	2.55	10.9	2.60	10.6	2.65
	20.0	15.0	11.8	2.06	11.5	2.10	11.2	2.14	10.9	2.19	10.6	2.23
	24.0	18.0	11.8	1.87	11.5	1.91	11.2	1.94	10.9	1.98	10.6	2.02
37	-15.0	-16.0	6.1	2.96	6.0	3.02	5.9	3.08	5.7	3.14	5.6	3.20
	-10.0	-11.0	7.6	3.24	7.5	3.31	7.3	3.38	7.1	3.45	6.9	3.51
	-5.0	-7.0	9.1	3.13	8.9	3.20	8.7	3.26	8.4	3.33	8.2	3.39
	0.0	-2.0	10.7	3.35	10.4	3.42	10.2	3.49	9.9	3.56	9.7	3.63
	5.0	3.0	11.8	3.21	11.5	3.27	11.2	3.34	10.9	3.41	10.6	3.47
	7.0	6.0	11.8	2.91	11.5	2.97	11.2	3.03	10.9	3.09	10.6	3.15
	10.0	8.0	11.8	2.80	11.5	2.86	11.2	2.92	10.9	2.98	10.6	3.04
	15.0	10.0	11.8	2.44	11.5	2.50	11.2	2.55	10.9	2.60	10.6	2.65
	20.0	15.0	11.8	2.06	11.5	2.10	11.2	2.14	10.9	2.19	10.6	2.23
	24.0	18.0	11.8	1.87	11.5	1.91	11.2	1.94	10.9	1.98	10.6	2.02
36	-15.0	-16.0	6.1	2.96	6.0	3.02	5.9	3.08	5.7	3.14	5.6	3.20
	-10.0	-11.0	7.6	3.24	7.5	3.31	7.3	3.38	7.1	3.45	6.9	3.51
	-5.0	-7.0	9.1	3.13	8.9	3.20	8.7	3.26	8.4	3.33	8.2	3.39
	0.0	-2.0	10.7	3.35	10.4	3.42	10.2	3.49	9.9	3.56	9.7	3.63
	5.0	3.0	11.8	3.21	11.5	3.27	11.2	3.34	10.9	3.41	10.6	3.47
	7.0	6.0	11.8	2.91	11.5	2.97	11.2	3.03	10.9	3.09	10.6	3.15
	10.0	8.0	11.8	2.80	11.5	2.86	11.2	2.92	10.9	2.98	10.6	3.04
	15.0	10.0	11.8	2.44	11.5	2.50	11.2	2.55	10.9	2.60	10.6	2.65
	20.0	15.0	11.8	2.06	11.5	2.10	11.2	2.14	10.9	2.19	10.6	2.23
	24.0	18.0	11.8	1.87	11.5	1.91	11.2	1.94	10.9	1.98	10.6	2.02
35	-15.0	-16.0	6.1	2.96	6.0	3.02	5.9	3.08	5.7	3.14	5.6	3.20
	-10.0	-11.0	7.6	3.24	7.5	3.31	7.3	3.38	7.1	3.45	6.9	3.51
	-5.0	-7.0	9.1	3.13	8.9	3.20	8.7	3.26	8.4	3.33	8.2	3.39
	0.0	-2.0	10.7	3.35	10.4	3.42	10.2	3.49	9.9	3.56	9.7	3.63
	5.0	3.0	11.8	3.21	11.5	3.27	11.2	3.34	10.9	3.41	10.6	3.47
	7.0	6.0	11.8	2.91	11.5	2.97	11.2	3.03	10.9	3.09	10.6	3.15
	10.0	8.0	11.8	2.80	11.5	2.86	11.2	2.92	10.9	2.98	10.6	3.04
	15.0	10.0	11.8	2.44	11.5	2.50	11.2	2.55	10.9	2.60	10.6	2.65
	20.0	15.0	11.8	2.06	11.5	2.10	11.2	2.14	10.9	2.19	10.6	2.23
	24.0	18.0	11.8	1.87	11.5	1.91	11.2	1.94	10.9	1.98	10.6	2.02
34	-15.0	-16.0	6.1	2.96	6.0	3.02	5.9	3.08	5.7	3.14	5.6	3.20
	-10.0	-11.0	7.6	3.24	7.5	3.31	7.3	3.38	7.1	3.45	6.9	3.51
	-5.0	-7.0	9.1	3.13	8.9	3.20	8.7	3.26	8.4	3.33	8.2	3.39
	0.0	-2.0	10.7	3.35	10.4	3.42	10.2	3.49	9.9	3.56	9.7	3.63
	5.0	3.0	11.8	3.21	11.5	3.27	11.2	3.34	10.9	3.41	10.6	3.47
	7.0	6.0	11.8	2.91	11.5	2.97	11.2	3.03	10.9	3.09	10.6	3.15
	10.0	8.0	11.8	2.80	11.5	2.86	11.2	2.92	10.9	2.98	10.6	3.04
	15.0	10.0	11.8	2.44	11.5	2.50	11.2	2.55	10.9	2.60	10.6	2.65
	20.0	15.0	11.8	2.06	11.5	2.10	11.2	2.14	10.9	2.19	10.6	2.23
	24.0	18.0	11.8	1.87	11.5	1.91	11.2	1.94	10.9	1.98	10.6	2.02
33	-15.0	-16.0	6.1	2.96	6.0	3.02	5.9	3.08	5.7	3.14	5.6	3.20
	-10.0	-11.0	7.6	3.24	7.5	3.31	7.3	3.38	7.1	3.45	6.9	3.51
	-5.0	-7.0	9.1	3.13	8.9	3.20	8.7	3.26	8.4	3.33	8.2	3.39
	0.0	-2.0	10.7	3.35	10.4	3.42	10.2	3.49	9.9	3.56	9.7	3.63
	5.0	3.0	11.8	3.21	11.5	3.27	11.2	3.34	10.9	3.41	10.6	3.47
	7.0	6.0	11.8	2.91	11.5	2.97	11.2	3.03	10.9	3.09	10.6	3.15
	10.0	8.0	11.8	2.80	11.5	2.86	11.2	2.92	10.9	2.98	10.6	3.04
	15.0	10.0	11.8	2.44	11.5	2.50	11.2	2.55	10.9	2.60	10.6	2.65
	20.0	15.0	11.8	2.06	11.5	2.10	11.2	2.14	10.9	2.19	10.6	2.23
	24.0	18.0	11.8	1.87	11.5	1.91	11.2	1.94	10.9	1.98	10.6	2.02

OUTDOOR UNIT
AOEG30KBTA4

Indoor unit connecting capacity	Outdoor temperature		Indoor temperature									
			16.0 °CDB		18.0 °CDB		20.0 °CDB		22.0 °CDB		24.0 °CDB	
kBtu/h	°CDB	°CWB	TC	IP	TC	IP	TC	IP	TC	IP	TC	IP
32	-15.0	-16.0	6.1	2.96	6.0	3.02	5.9	3.08	5.7	3.14	5.6	3.20
	-10.0	-11.0	7.6	3.24	7.5	3.31	7.3	3.38	7.1	3.45	6.9	3.51
	-5.0	-7.0	9.1	3.13	8.9	3.20	8.7	3.26	8.4	3.33	8.2	3.39
	0.0	-2.0	10.7	3.35	10.4	3.42	10.2	3.49	9.9	3.56	9.7	3.63
	5.0	3.0	11.8	3.21	11.5	3.27	11.2	3.34	10.9	3.41	10.6	3.47
	7.0	6.0	11.8	2.91	11.5	2.97	11.2	3.03	10.9	3.09	10.6	3.15
	10.0	8.0	11.8	2.80	11.5	2.86	11.2	2.92	10.9	2.98	10.6	3.04
	15.0	10.0	11.8	2.44	11.5	2.50	11.2	2.55	10.9	2.60	10.6	2.65
	20.0	15.0	11.8	2.06	11.5	2.10	11.2	2.14	10.9	2.19	10.6	2.23
	24.0	18.0	11.8	1.87	11.5	1.91	11.2	1.94	10.9	1.98	10.6	2.02
31	-15.0	-16.0	6.1	2.96	6.0	3.02	5.9	3.08	5.7	3.14	5.6	3.20
	-10.0	-11.0	7.6	3.24	7.5	3.31	7.3	3.38	7.1	3.45	6.9	3.51
	-5.0	-7.0	9.1	3.13	8.9	3.20	8.7	3.26	8.4	3.33	8.2	3.39
	0.0	-2.0	10.7	3.35	10.4	3.42	10.2	3.49	9.9	3.56	9.7	3.63
	5.0	3.0	11.8	3.21	11.5	3.27	11.2	3.34	10.9	3.41	10.6	3.47
	7.0	6.0	11.8	2.91	11.5	2.97	11.2	3.03	10.9	3.09	10.6	3.15
	10.0	8.0	11.8	2.80	11.5	2.86	11.2	2.92	10.9	2.98	10.6	3.04
	15.0	10.0	11.8	2.44	11.5	2.50	11.2	2.55	10.9	2.60	10.6	2.65
	20.0	15.0	11.8	2.06	11.5	2.10	11.2	2.14	10.9	2.19	10.6	2.23
	24.0	18.0	11.8	1.87	11.5	1.91	11.2	1.94	10.9	1.98	10.6	2.02
30	-15.0	-16.0	6.1	2.96	6.0	3.02	5.9	3.08	5.7	3.14	5.6	3.20
	-10.0	-11.0	7.6	3.24	7.5	3.31	7.3	3.38	7.1	3.45	6.9	3.51
	-5.0	-7.0	9.1	3.13	8.9	3.20	8.7	3.26	8.4	3.33	8.2	3.39
	0.0	-2.0	10.7	3.35	10.4	3.42	10.2	3.49	9.9	3.56	9.7	3.63
	5.0	3.0	11.8	3.21	11.5	3.27	11.2	3.34	10.9	3.41	10.6	3.47
	7.0	6.0	11.8	2.91	11.5	2.97	11.2	3.03	10.9	3.09	10.6	3.15
	10.0	8.0	11.8	2.80	11.5	2.86	11.2	2.92	10.9	2.98	10.6	3.04
	15.0	10.0	11.8	2.44	11.5	2.50	11.2	2.55	10.9	2.60	10.6	2.65
	20.0	15.0	11.8	2.06	11.5	2.10	11.2	2.14	10.9	2.19	10.6	2.23
	24.0	18.0	11.8	1.87	11.5	1.91	11.2	1.94	10.9	1.98	10.6	2.02
29	-15.0	-16.0	6.1	2.96	6.0	3.02	5.9	3.08	5.7	3.14	5.6	3.20
	-10.0	-11.0	7.6	3.24	7.5	3.31	7.3	3.38	7.1	3.45	6.9	3.51
	-5.0	-7.0	9.1	3.13	8.9	3.20	8.7	3.26	8.4	3.33	8.2	3.39
	0.0	-2.0	10.7	3.35	10.4	3.42	10.2	3.49	9.9	3.56	9.7	3.63
	5.0	3.0	11.8	3.21	11.5	3.27	11.2	3.34	10.9	3.41	10.6	3.47
	7.0	6.0	11.8	2.91	11.5	2.97	11.2	3.03	10.9	3.09	10.6	3.15
	10.0	8.0	11.8	2.80	11.5	2.86	11.2	2.92	10.9	2.98	10.6	3.04
	15.0	10.0	11.8	2.44	11.5	2.50	11.2	2.55	10.9	2.60	10.6	2.65
	20.0	15.0	11.8	2.06	11.5	2.10	11.2	2.14	10.9	2.19	10.6	2.23
	24.0	18.0	11.8	1.87	11.5	1.91	11.2	1.94	10.9	1.98	10.6	2.02
28	-15.0	-16.0	6.1	2.96	6.0	3.02	5.9	3.08	5.7	3.14	5.6	3.20
	-10.0	-11.0	7.6	3.24	7.5	3.31	7.3	3.38	7.1	3.45	6.9	3.51
	-5.0	-7.0	9.1	3.13	8.9	3.20	8.7	3.26	8.4	3.33	8.2	3.39
	0.0	-2.0	10.7	3.35	10.4	3.42	10.2	3.49	9.9	3.56	9.7	3.63
	5.0	3.0	11.8	3.21	11.5	3.27	11.2	3.34	10.9	3.41	10.6	3.47
	7.0	6.0	11.8	2.91	11.5	2.97	11.2	3.03	10.9	3.09	10.6	3.15
	10.0	8.0	11.8	2.80	11.5	2.86	11.2	2.92	10.9	2.98	10.6	3.04
	15.0	10.0	11.8	2.44	11.5	2.50	11.2	2.55	10.9	2.60	10.6	2.65
	20.0	15.0	11.8	2.06	11.5	2.10	11.2	2.14	10.9	2.19	10.6	2.23
	24.0	18.0	11.8	1.87	11.5	1.91	11.2	1.94	10.9	1.98	10.6	2.02
27	-15.0	-16.0	5.9	2.76	5.8	2.81	5.6	2.87	5.5	2.93	5.4	2.99
	-10.0	-11.0	7.4	3.03	7.2	3.09	7.0	3.15	6.8	3.22	6.7	3.28
	-5.0	-7.0	8.8	2.92	8.6	2.98	8.4	3.04	8.1	3.10	7.9	3.16
	0.0	-2.0	10.3	3.13	10.1	3.19	9.8	3.26	9.6	3.32	9.3	3.39
	5.0	3.0	11.3	2.99	11.1	3.05	10.8	3.12	10.5	3.18	10.3	3.24
	7.0	6.0	11.3	2.72	11.1	2.77	10.8	2.83	10.5	2.89	10.3	2.94
	10.0	8.0	11.3	2.61	11.1	2.67	10.8	2.72	10.5	2.78	10.3	2.83
	15.0	10.0	11.3	2.28	11.1	2.33	10.8	2.38	10.5	2.42	10.3	2.47
	20.0	15.0	11.3	1.92	11.1	1.96	10.8	2.00	10.5	2.04	10.3	2.08
	24.0	18.0	11.3	1.74	11.1	1.78	10.8	1.81	10.5	1.85	10.3	1.89
26	-15.0	-16.0	5.7	2.64	5.6	2.70	5.4	2.75	5.3	2.81	5.2	2.86
	-10.0	-11.0	7.1	2.90	6.9	2.96	6.8	3.02	6.6	3.08	6.4	3.14
	-5.0	-7.0	8.4	2.80	8.2	2.86	8.0	2.91	7.8	2.97	7.6	3.03
	0.0	-2.0	9.9	2.99	9.7	3.06	9.5	3.12	9.2	3.18	9.0	3.24
	5.0	3.0	10.9	2.86	10.7	2.92	10.4	2.98	10.1	3.04	9.9	3.10
	7.0	6.0	10.9	2.60	10.7	2.66	10.4	2.71	10.1	2.76	9.9	2.82
	10.0	8.0	10.9	2.50	10.7	2.56	10.4	2.61	10.1	2.66	9.9	2.71
	15.0	10.0	10.9	2.18	10.7	2.23	10.4	2.27	10.1	2.32	9.9	2.37
	20.0	15.0	10.9	1.84	10.7	1.88	10.4	1.92	10.1	1.95	9.9	1.99
	24.0	18.0	10.9	1.67	10.7	1.70	10.4	1.74	10.1	1.77	9.9	1.81
25	-15.0	-16.0	5.5	2.52	5.4	2.58	5.2	2.63	5.1	2.68	5.0	2.73
	-10.0	-11.0	6.8	2.77	6.7	2.83	6.5	2.88	6.3	2.94	6.2	3.00
	-5.0	-7.0	8.1	2.67	7.9	2.73	7.7	2.78	7.5	2.84	7.4	2.90
	0.0	-2.0	9.6	2.86	9.3	2.92	9.1	2.98	8.9	3.04	8.6	3.10
	5.0	3.0	10.5	2.74	10.3	2.79	10.0	2.85	9.8	2.91	9.5	2.97
	7.0	6.0	10.5	2.49	10.3	2.54	10.0	2.59	9.8	2.64	9.5	2.69
	10.0	8.0	10.5	2.39	10.3	2.44	10.0	2.49	9.8	2.54	9.5	2.59
	15.0	10.0	10.5	2.09	10.3	2.13	10.0	2.17	9.8	2.22	9.5	2.26
	20.0	15.0	10.5	1.76	10.3	1.79	10.0	1.83	9.8	1.87	9.5	1.90
	24.0	18.0	10.5	1.59	10.3	1.63	10.0	1.66	9.8	1.69	9.5	1.73

OUTDOOR UNIT
AOEG30KBTA4

NOTES:

- TC: Total Capacity (kW), IP: Input Power (kW)
- Values mentioned in the table are based on the following conditions:
  - Power source of specifications: 230 V
  - Pipe length: 5 m, Height difference: 0 m (Outdoor unit—Indoor unit)
- 2 or more indoor units should be connected.
- The total ability of connected a indoor unit is from 25,000 Btu/h up to 49,000 Btu/h.
- Input in the table are calculated based on the maximum indoor unit input combinations.

OUTDOOR UNIT
AOEG30KBTA4

● Compact cassette type

Model: AUXG07KVLA

Outdoor temperature		Indoor temperature (°CDB)				
		16.0	18.0	20.0	22.0	24.0
(°CDB)	(°CWB)	TC	TC	TC	TC	TC
-15.0	-16.0	1.54	1.50	1.46	1.43	1.39
-10.0	-11.0	1.91	1.87	1.82	1.78	1.73
-5.0	-7.0	2.27	2.22	2.17	2.11	2.06
0.0	-2.0	2.68	2.61	2.55	2.48	2.42
5.0	3.0	2.94	2.87	2.80	2.73	2.66
7.0	6.0	2.94	2.87	2.80	2.73	2.66
10.0	8.0	2.94	2.87	2.80	2.73	2.66
15.0	10.0	2.94	2.87	2.80	2.73	2.66
20.0	15.0	2.94	2.87	2.80	2.73	2.66
24.0	18.0	2.94	2.87	2.80	2.73	2.66

Model: AUXG09KVLA

Outdoor temperature		Indoor temperature (°CDB)				
		16.0	18.0	20.0	22.0	24.0
(°CDB)	(°CWB)	TC	TC	TC	TC	TC
-15.0	-16.0	1.97	1.93	1.88	1.83	1.79
-10.0	-11.0	2.46	2.40	2.34	2.28	2.22
-5.0	-7.0	2.92	2.86	2.79	2.72	2.65
0.0	-2.0	3.44	3.36	3.28	3.19	3.11
5.0	3.0	3.78	3.69	3.60	3.51	3.42
7.0	6.0	3.78	3.69	3.60	3.51	3.42
10.0	8.0	3.78	3.69	3.60	3.51	3.42
15.0	10.0	3.78	3.69	3.60	3.51	3.42
20.0	15.0	3.78	3.69	3.60	3.51	3.42
24.0	18.0	3.78	3.69	3.60	3.51	3.42

Model: AUXG12KVLA

Outdoor temperature		Indoor temperature (°CDB)				
		16.0	18.0	20.0	22.0	24.0
(°CDB)	(°CWB)	TC	TC	TC	TC	TC
-15.0	-16.0	2.63	2.57	2.51	2.44	2.38
-10.0	-11.0	3.28	3.20	3.12	3.04	2.97
-5.0	-7.0	3.90	3.81	3.71	3.62	3.53
0.0	-2.0	4.59	4.48	4.37	4.26	4.15
5.0	3.0	5.04	4.92	4.80	4.68	4.56
7.0	6.0	5.04	4.92	4.80	4.68	4.56
10.0	8.0	5.04	4.92	4.80	4.68	4.56
15.0	10.0	5.04	4.92	4.80	4.68	4.56
20.0	15.0	5.04	4.92	4.80	4.68	4.56
24.0	18.0	5.04	4.92	4.80	4.68	4.56

Model: AUXG14KVLA

Outdoor temperature		Indoor temperature (°CDB)				
		16.0	18.0	20.0	22.0	24.0
(°CDB)	(°CWB)	TC	TC	TC	TC	TC
-15.0	-16.0	3.07	3.00	2.93	2.85	2.78
-10.0	-11.0	3.82	3.73	3.64	3.55	3.46
-5.0	-7.0	4.55	4.44	4.33	4.22	4.12
0.0	-2.0	5.35	5.22	5.10	4.97	4.84
5.0	3.0	5.88	5.74	5.60	5.46	5.32
7.0	6.0	5.88	5.74	5.60	5.46	5.32
10.0	8.0	5.88	5.74	5.60	5.46	5.32
15.0	10.0	5.88	5.74	5.60	5.46	5.32
20.0	15.0	5.88	5.74	5.60	5.46	5.32
24.0	18.0	5.88	5.74	5.60	5.46	5.32

Model: AUXG18KVLA

Outdoor temperature		Indoor temperature (°CDB)				
		16.0	18.0	20.0	22.0	24.0
(°CDB)	(°CWB)	TC	TC	TC	TC	TC
-15.0	-16.0	3.69	3.60	3.51	3.42	3.33
-10.0	-11.0	4.59	4.48	4.37	4.26	4.15
-5.0	-7.0	5.46	5.33	5.20	5.07	4.94
0.0	-2.0	6.42	6.27	6.11	5.96	5.81
5.0	3.0	7.06	6.89	6.72	6.55	6.38
7.0	6.0	7.06	6.89	6.72	6.55	6.38
10.0	8.0	7.06	6.89	6.72	6.55	6.38
15.0	10.0	7.06	6.89	6.72	6.55	6.38
20.0	15.0	7.06	6.89	6.72	6.55	6.38
24.0	18.0	7.06	6.89	6.72	6.55	6.38

Model: AUXG22KVLA

Outdoor temperature		Indoor temperature (°CDB)				
		16.0	18.0	20.0	22.0	24.0
(°CDB)	(°CWB)	TC	TC	TC	TC	TC
-15.0	-16.0	4.66	4.55	4.44	4.33	4.22
-10.0	-11.0	5.80	5.67	5.53	5.39	5.25
-5.0	-7.0	6.91	6.74	6.58	6.41	6.25
0.0	-2.0	8.12	7.93	7.73	7.54	7.35
5.0	3.0	8.93	8.71	8.50	8.29	8.08
7.0	6.0	8.93	8.71	8.50	8.29	8.08
10.0	8.0	8.93	8.71	8.50	8.29	8.08
15.0	10.0	8.93	8.71	8.50	8.29	8.08
20.0	15.0	8.93	8.71	8.50	8.29	8.08
24.0	18.0	8.93	8.71	8.50	8.29	8.08

NOTES:

- TC: Total Capacity (kW)
- Values mentioned in the table are based on the following conditions:
  - Pipe length: 5 m, Height difference: 0 m (Outdoor unit—Indoor unit)

OUTDOOR UNIT
AOEG30KBTA4

● Mini duct type

Model: ARXG07KSLAP

Outdoor temperature		Indoor temperature (°CDB)				
		16.0	18.0	20.0	22.0	24.0
(°CDB)	(°CWB)	TC	TC	TC	TC	TC
-15.0	-16.0	1.54	1.50	1.46	1.43	1.39
-10.0	-11.0	1.91	1.87	1.82	1.78	1.73
-5.0	-7.0	2.27	2.22	2.17	2.11	2.06
0.0	-2.0	2.68	2.61	2.55	2.48	2.42
5.0	3.0	2.94	2.87	2.80	2.73	2.66
7.0	6.0	2.94	2.87	2.80	2.73	2.66
10.0	8.0	2.94	2.87	2.80	2.73	2.66
15.0	10.0	2.94	2.87	2.80	2.73	2.66
20.0	15.0	2.94	2.87	2.80	2.73	2.66
24.0	18.0	2.94	2.87	2.80	2.73	2.66

Model: ARXG09KSLAP

Outdoor temperature		Indoor temperature (°CDB)				
		16.0	18.0	20.0	22.0	24.0
(°CDB)	(°CWB)	TC	TC	TC	TC	TC
-15.0	-16.0	1.97	1.93	1.88	1.83	1.79
-10.0	-11.0	2.46	2.40	2.34	2.28	2.22
-5.0	-7.0	2.92	2.86	2.79	2.72	2.65
0.0	-2.0	3.44	3.36	3.28	3.19	3.11
5.0	3.0	3.78	3.69	3.60	3.51	3.42
7.0	6.0	3.78	3.69	3.60	3.51	3.42
10.0	8.0	3.78	3.69	3.60	3.51	3.42
15.0	10.0	3.78	3.69	3.60	3.51	3.42
20.0	15.0	3.78	3.69	3.60	3.51	3.42
24.0	18.0	3.78	3.69	3.60	3.51	3.42

Model: ARXG12KSLAP

Outdoor temperature		Indoor temperature (°CDB)				
		16.0	18.0	20.0	22.0	24.0
(°CDB)	(°CWB)	TC	TC	TC	TC	TC
-15.0	-16.0	2.63	2.57	2.51	2.44	2.38
-10.0	-11.0	3.28	3.20	3.12	3.04	2.97
-5.0	-7.0	3.90	3.81	3.71	3.62	3.53
0.0	-2.0	4.59	4.48	4.37	4.26	4.15
5.0	3.0	5.04	4.92	4.80	4.68	4.56
7.0	6.0	5.04	4.92	4.80	4.68	4.56
10.0	8.0	5.04	4.92	4.80	4.68	4.56
15.0	10.0	5.04	4.92	4.80	4.68	4.56
20.0	15.0	5.04	4.92	4.80	4.68	4.56
24.0	18.0	5.04	4.92	4.80	4.68	4.56

Model: ARXG14KSLAP

Outdoor temperature		Indoor temperature (°CDB)				
		16.0	18.0	20.0	22.0	24.0
(°CDB)	(°CWB)	TC	TC	TC	TC	TC
-15.0	-16.0	3.07	3.00	2.93	2.85	2.78
-10.0	-11.0	3.82	3.73	3.64	3.55	3.46
-5.0	-7.0	4.55	4.44	4.33	4.22	4.12
0.0	-2.0	5.35	5.22	5.10	4.97	4.84
5.0	3.0	5.88	5.74	5.60	5.46	5.32
7.0	6.0	5.88	5.74	5.60	5.46	5.32
10.0	8.0	5.88	5.74	5.60	5.46	5.32
15.0	10.0	5.88	5.74	5.60	5.46	5.32
20.0	15.0	5.88	5.74	5.60	5.46	5.32
24.0	18.0	5.88	5.74	5.60	5.46	5.32

Model: ARXG18KSLAP

Outdoor temperature		Indoor temperature (°CDB)				
		16.0	18.0	20.0	22.0	24.0
(°CDB)	(°CWB)	TC	TC	TC	TC	TC
-15.0	-16.0	3.69	3.60	3.51	3.42	3.33
-10.0	-11.0	4.59	4.48	4.37	4.26	4.15
-5.0	-7.0	5.46	5.33	5.20	5.07	4.94
0.0	-2.0	6.42	6.27	6.11	5.96	5.81
5.0	3.0	7.06	6.89	6.72	6.55	6.38
7.0	6.0	7.06	6.89	6.72	6.55	6.38
10.0	8.0	7.06	6.89	6.72	6.55	6.38
15.0	10.0	7.06	6.89	6.72	6.55	6.38
20.0	15.0	7.06	6.89	6.72	6.55	6.38
24.0	18.0	7.06	6.89	6.72	6.55	6.38

NOTES:

- TC: Total Capacity (kW)
- Values mentioned in the table are based on the following conditions:
  - Pipe length: 5 m, Height difference: 0 m [Outdoor unit—Indoor unit]

OUTDOOR UNIT
AOEG30KBTA4

● Slim duct type

Model: ARXG07KLLAP

Outdoor temperature		Indoor temperature (°CDB)				
		16.0	18.0	20.0	22.0	24.0
(°CDB)	(°CWB)	TC	TC	TC	TC	TC
-15.0	-16.0	1.54	1.50	1.46	1.43	1.39
-10.0	-11.0	1.91	1.87	1.82	1.78	1.73
-5.0	-7.0	2.27	2.22	2.17	2.11	2.06
0.0	-2.0	2.68	2.61	2.55	2.48	2.42
5.0	3.0	2.94	2.87	2.80	2.73	2.66
7.0	6.0	2.94	2.87	2.80	2.73	2.66
10.0	8.0	2.94	2.87	2.80	2.73	2.66
15.0	10.0	2.94	2.87	2.80	2.73	2.66
20.0	15.0	2.94	2.87	2.80	2.73	2.66
24.0	18.0	2.94	2.87	2.80	2.73	2.66

Model: ARXG09KLLAP

Outdoor temperature		Indoor temperature (°CDB)				
		16.0	18.0	20.0	22.0	24.0
(°CDB)	(°CWB)	TC	TC	TC	TC	TC
-15.0	-16.0	1.97	1.93	1.88	1.83	1.79
-10.0	-11.0	2.46	2.40	2.34	2.28	2.22
-5.0	-7.0	2.92	2.86	2.79	2.72	2.65
0.0	-2.0	3.44	3.36	3.28	3.19	3.11
5.0	3.0	3.78	3.69	3.60	3.51	3.42
7.0	6.0	3.78	3.69	3.60	3.51	3.42
10.0	8.0	3.78	3.69	3.60	3.51	3.42
15.0	10.0	3.78	3.69	3.60	3.51	3.42
20.0	15.0	3.78	3.69	3.60	3.51	3.42
24.0	18.0	3.78	3.69	3.60	3.51	3.42

Model: ARXG12KLLAP

Outdoor temperature		Indoor temperature (°CDB)				
		16.0	18.0	20.0	22.0	24.0
(°CDB)	(°CWB)	TC	TC	TC	TC	TC
-15.0	-16.0	2.63	2.57	2.51	2.44	2.38
-10.0	-11.0	3.28	3.20	3.12	3.04	2.97
-5.0	-7.0	3.90	3.81	3.71	3.62	3.53
0.0	-2.0	4.59	4.48	4.37	4.26	4.15
5.0	3.0	5.04	4.92	4.80	4.68	4.56
7.0	6.0	5.04	4.92	4.80	4.68	4.56
10.0	8.0	5.04	4.92	4.80	4.68	4.56
15.0	10.0	5.04	4.92	4.80	4.68	4.56
20.0	15.0	5.04	4.92	4.80	4.68	4.56
24.0	18.0	5.04	4.92	4.80	4.68	4.56

Model: ARXG14KLLAP

Outdoor temperature		Indoor temperature (°CDB)				
		16.0	18.0	20.0	22.0	24.0
(°CDB)	(°CWB)	TC	TC	TC	TC	TC
-15.0	-16.0	3.07	3.00	2.93	2.85	2.78
-10.0	-11.0	3.82	3.73	3.64	3.55	3.46
-5.0	-7.0	4.55	4.44	4.33	4.22	4.12
0.0	-2.0	5.35	5.22	5.10	4.97	4.84
5.0	3.0	5.88	5.74	5.60	5.46	5.32
7.0	6.0	5.88	5.74	5.60	5.46	5.32
10.0	8.0	5.88	5.74	5.60	5.46	5.32
15.0	10.0	5.88	5.74	5.60	5.46	5.32
20.0	15.0	5.88	5.74	5.60	5.46	5.32
24.0	18.0	5.88	5.74	5.60	5.46	5.32

Model: ARXG18KLLAP

Outdoor temperature		Indoor temperature (°CDB)				
		16.0	18.0	20.0	22.0	24.0
(°CDB)	(°CWB)	TC	TC	TC	TC	TC
-15.0	-16.0	3.69	3.60	3.51	3.42	3.33
-10.0	-11.0	4.59	4.48	4.37	4.26	4.15
-5.0	-7.0	5.46	5.33	5.20	5.07	4.94
0.0	-2.0	6.42	6.27	6.11	5.96	5.81
5.0	3.0	7.06	6.89	6.72	6.55	6.38
7.0	6.0	7.06	6.89	6.72	6.55	6.38
10.0	8.0	7.06	6.89	6.72	6.55	6.38
15.0	10.0	7.06	6.89	6.72	6.55	6.38
20.0	15.0	7.06	6.89	6.72	6.55	6.38
24.0	18.0	7.06	6.89	6.72	6.55	6.38

NOTES:

- TC: Total Capacity (kW)
- Values mentioned in the table are based on the following conditions:
  - Pipe length: 5 m, Height difference: 0 m (Outdoor unit—Indoor unit)

● Medium static pressure duct type (ARXG22KMLB)

Model: ARXG22KMLB

Outdoor temperature		Indoor temperature (°CDB)				
		16.0	18.0	20.0	22.0	24.0
(°CDB)	(°CWB)	TC	TC	TC	TC	TC
-15.0	-16.0	4.66	4.55	4.44	4.33	4.22
-10.0	-11.0	5.80	5.67	5.53	5.39	5.25
-5.0	-7.0	6.91	6.74	6.58	6.41	6.25
0.0	-2.0	8.12	7.93	7.73	7.54	7.35
5.0	3.0	8.93	8.71	8.50	8.29	8.08
7.0	6.0	8.93	8.71	8.50	8.29	8.08
10.0	8.0	8.93	8.71	8.50	8.29	8.08
15.0	10.0	8.93	8.71	8.50	8.29	8.08
20.0	15.0	8.93	8.71	8.50	8.29	8.08
24.0	18.0	8.93	8.71	8.50	8.29	8.08

NOTES:

- TC: Total Capacity (kW)
- Values mentioned in the table are based on the following conditions:
  - Pipe length: 5 m, Height difference: 0 m (Outdoor unit—Indoor unit)

● Medium static pressure duct type (ARXH12–22KMTAP)

Model: ARXH12KMTAP

Outdoor temperature		Indoor temperature (°CDB)				
		16.0	18.0	20.0	22.0	24.0
(°CDB)	(°CWB)	TC	TC	TC	TC	TC
-15.0	-16.0	2.63	2.57	2.51	2.44	2.38
-10.0	-11.0	3.28	3.20	3.12	3.04	2.97
-5.0	-7.0	3.90	3.81	3.71	3.62	3.53
0.0	-2.0	4.59	4.48	4.37	4.26	4.15
5.0	3.0	5.04	4.92	4.80	4.68	4.56
7.0	6.0	5.04	4.92	4.80	4.68	4.56
10.0	8.0	5.04	4.92	4.80	4.68	4.56
15.0	10.0	5.04	4.92	4.80	4.68	4.56
20.0	15.0	5.04	4.92	4.80	4.68	4.56
24.0	18.0	5.04	4.92	4.80	4.68	4.56

Model: ARXH14KMTAP

Outdoor temperature		Indoor temperature (°CDB)				
		16.0	18.0	20.0	22.0	24.0
(°CDB)	(°CWB)	TC	TC	TC	TC	TC
-15.0	-16.0	3.07	3.00	2.93	2.85	2.78
-10.0	-11.0	3.82	3.73	3.64	3.55	3.46
-5.0	-7.0	4.55	4.44	4.33	4.22	4.12
0.0	-2.0	5.35	5.22	5.10	4.97	4.84
5.0	3.0	5.88	5.74	5.60	5.46	5.32
7.0	6.0	5.88	5.74	5.60	5.46	5.32
10.0	8.0	5.88	5.74	5.60	5.46	5.32
15.0	10.0	5.88	5.74	5.60	5.46	5.32
20.0	15.0	5.88	5.74	5.60	5.46	5.32
24.0	18.0	5.88	5.74	5.60	5.46	5.32

Model: ARXH18KMTAP

Outdoor temperature		Indoor temperature (°CDB)				
		16.0	18.0	20.0	22.0	24.0
(°CDB)	(°CWB)	TC	TC	TC	TC	TC
-15.0	-16.0	3.69	3.60	3.51	3.42	3.33
-10.0	-11.0	4.59	4.48	4.37	4.26	4.15
-5.0	-7.0	5.46	5.33	5.20	5.07	4.94
0.0	-2.0	6.42	6.27	6.11	5.96	5.81
5.0	3.0	7.06	6.89	6.72	6.55	6.38
7.0	6.0	7.06	6.89	6.72	6.55	6.38
10.0	8.0	7.06	6.89	6.72	6.55	6.38
15.0	10.0	7.06	6.89	6.72	6.55	6.38
20.0	15.0	7.06	6.89	6.72	6.55	6.38
24.0	18.0	7.06	6.89	6.72	6.55	6.38

Model: ARXH22KMTAP

Outdoor temperature		Indoor temperature (°CDB)				
		16.0	18.0	20.0	22.0	24.0
(°CDB)	(°CWB)	TC	TC	TC	TC	TC
-15.0	-16.0	4.66	4.55	4.44	4.33	4.22
-10.0	-11.0	5.80	5.67	5.53	5.39	5.25
-5.0	-7.0	6.91	6.74	6.58	6.41	6.25
0.0	-2.0	8.12	7.93	7.73	7.54	7.35
5.0	3.0	8.93	8.71	8.50	8.29	8.08
7.0	6.0	8.93	8.71	8.50	8.29	8.08
10.0	8.0	8.93	8.71	8.50	8.29	8.08
15.0	10.0	8.93	8.71	8.50	8.29	8.08
20.0	15.0	8.93	8.71	8.50	8.29	8.08
24.0	18.0	8.93	8.71	8.50	8.29	8.08

NOTES:

- TC: Total Capacity (kW)
- Values mentioned in the table are based on the following conditions:
  - Pipe length: 5 m, Height difference: 0 m (Outdoor unit—Indoor unit)

● Wall mounted type

Model: ASEH07KMCG, ASEH07KMCG-B

Outdoor temperature		Indoor temperature (°CDB)				
		16.0	18.0	20.0	22.0	24.0
(°CDB)	(°CWB)	TC	TC	TC	TC	TC
-15.0	-16.0	1.54	1.50	1.46	1.43	1.39
-10.0	-11.0	1.91	1.87	1.82	1.78	1.73
-5.0	-7.0	2.27	2.22	2.17	2.11	2.06
0.0	-2.0	2.68	2.61	2.55	2.48	2.42
5.0	3.0	2.94	2.87	2.80	2.73	2.66
7.0	6.0	2.94	2.87	2.80	2.73	2.66
10.0	8.0	2.94	2.87	2.80	2.73	2.66
15.0	10.0	2.94	2.87	2.80	2.73	2.66
20.0	15.0	2.94	2.87	2.80	2.73	2.66
24.0	18.0	2.94	2.87	2.80	2.73	2.66

Model: ASEH09KMCG, ASEH09KMCG-B

Outdoor temperature		Indoor temperature (°CDB)				
		16.0	18.0	20.0	22.0	24.0
(°CDB)	(°CWB)	TC	TC	TC	TC	TC
-15.0	-16.0	1.97	1.93	1.88	1.83	1.79
-10.0	-11.0	2.46	2.40	2.34	2.28	2.22
-5.0	-7.0	2.92	2.86	2.79	2.72	2.65
0.0	-2.0	3.44	3.36	3.28	3.19	3.11
5.0	3.0	3.78	3.69	3.60	3.51	3.42
7.0	6.0	3.78	3.69	3.60	3.51	3.42
10.0	8.0	3.78	3.69	3.60	3.51	3.42
15.0	10.0	3.78	3.69	3.60	3.51	3.42
20.0	15.0	3.78	3.69	3.60	3.51	3.42
24.0	18.0	3.78	3.69	3.60	3.51	3.42

Model: ASEH12KMCG, ASEH12KMCG-B

Outdoor temperature		Indoor temperature (°CDB)				
		16.0	18.0	20.0	22.0	24.0
(°CDB)	(°CWB)	TC	TC	TC	TC	TC
-15.0	-16.0	2.63	2.57	2.51	2.44	2.38
-10.0	-11.0	3.28	3.20	3.12	3.04	2.97
-5.0	-7.0	3.90	3.81	3.71	3.62	3.53
0.0	-2.0	4.59	4.48	4.37	4.26	4.15
5.0	3.0	5.04	4.92	4.80	4.68	4.56
7.0	6.0	5.04	4.92	4.80	4.68	4.56
10.0	8.0	5.04	4.92	4.80	4.68	4.56
15.0	10.0	5.04	4.92	4.80	4.68	4.56
20.0	15.0	5.04	4.92	4.80	4.68	4.56
24.0	18.0	5.04	4.92	4.80	4.68	4.56

Model: ASEH14KMCG, ASEH14KMCG-B

Outdoor temperature		Indoor temperature (°CDB)				
		16.0	18.0	20.0	22.0	24.0
(°CDB)	(°CWB)	TC	TC	TC	TC	TC
-15.0	-16.0	3.07	3.00	2.93	2.85	2.78
-10.0	-11.0	3.82	3.73	3.64	3.55	3.46
-5.0	-7.0	4.55	4.44	4.33	4.22	4.12
0.0	-2.0	5.35	5.22	5.10	4.97	4.84
5.0	3.0	5.88	5.74	5.60	5.46	5.32
7.0	6.0	5.88	5.74	5.60	5.46	5.32
10.0	8.0	5.88	5.74	5.60	5.46	5.32
15.0	10.0	5.88	5.74	5.60	5.46	5.32
20.0	15.0	5.88	5.74	5.60	5.46	5.32
24.0	18.0	5.88	5.74	5.60	5.46	5.32

Model: ASEG07KETF, ASEG07KETF-B

Outdoor temperature		Indoor temperature (°CDB)				
		16.0	18.0	20.0	22.0	24.0
(°CDB)	(°CWB)	TC	TC	TC	TC	TC
-15.0	-16.0	1.54	1.50	1.46	1.43	1.39
-10.0	-11.0	1.91	1.87	1.82	1.78	1.73
-5.0	-7.0	2.27	2.22	2.17	2.11	2.06
0.0	-2.0	2.68	2.61	2.55	2.48	2.42
5.0	3.0	2.94	2.87	2.80	2.73	2.66
7.0	6.0	2.94	2.87	2.80	2.73	2.66
10.0	8.0	2.94	2.87	2.80	2.73	2.66
15.0	10.0	2.94	2.87	2.80	2.73	2.66
20.0	15.0	2.94	2.87	2.80	2.73	2.66
24.0	18.0	2.94	2.87	2.80	2.73	2.66

Model: ASEG09KETF, ASEG09KETF-B

Outdoor temperature		Indoor temperature (°CDB)				
		16.0	18.0	20.0	22.0	24.0
(°CDB)	(°CWB)	TC	TC	TC	TC	TC
-15.0	-16.0	1.97	1.93	1.88	1.83	1.79
-10.0	-11.0	2.46	2.40	2.34	2.28	2.22
-5.0	-7.0	2.92	2.86	2.79	2.72	2.65
0.0	-2.0	3.44	3.36	3.28	3.19	3.11
5.0	3.0	3.78	3.69	3.60	3.51	3.42
7.0	6.0	3.78	3.69	3.60	3.51	3.42
10.0	8.0	3.78	3.69	3.60	3.51	3.42
15.0	10.0	3.78	3.69	3.60	3.51	3.42
20.0	15.0	3.78	3.69	3.60	3.51	3.42
24.0	18.0	3.78	3.69	3.60	3.51	3.42

Model: ASEG12KETF, ASEG12KETF-B

Outdoor temperature		Indoor temperature (°CDB)				
		16.0	18.0	20.0	22.0	24.0
(°CDB)	(°CWB)	TC	TC	TC	TC	TC
-15.0	-16.0	2.63	2.57	2.51	2.44	2.38
-10.0	-11.0	3.28	3.20	3.12	3.04	2.97
-5.0	-7.0	3.90	3.81	3.71	3.62	3.53
0.0	-2.0	4.59	4.48	4.37	4.26	4.15
5.0	3.0	5.04	4.92	4.80	4.68	4.56
7.0	6.0	5.04	4.92	4.80	4.68	4.56
10.0	8.0	5.04	4.92	4.80	4.68	4.56
15.0	10.0	5.04	4.92	4.80	4.68	4.56
20.0	15.0	5.04	4.92	4.80	4.68	4.56
24.0	18.0	5.04	4.92	4.80	4.68	4.56

Model: ASEG14KETF, ASEG14KETF-B

Outdoor temperature		Indoor temperature (°CDB)				
		16.0	18.0	20.0	22.0	24.0
(°CDB)	(°CWB)	TC	TC	TC	TC	TC
-15.0	-16.0	3.07	3.00	2.93	2.85	2.78
-10.0	-11.0	3.82	3.73	3.64	3.55	3.46
-5.0	-7.0	4.55	4.44	4.33	4.22	4.12
0.0	-2.0	5.35	5.22	5.10	4.97	4.84
5.0	3.0	5.88	5.74	5.60	5.46	5.32
7.0	6.0	5.88	5.74	5.60	5.46	5.32
10.0	8.0	5.88	5.74	5.60	5.46	5.32
15.0	10.0	5.88	5.74	5.60	5.46	5.32
20.0	15.0	5.88	5.74	5.60	5.46	5.32
24.0	18.0	5.88	5.74	5.60	5.46	5.32

Model: ASEH07KGTG

Outdoor temperature		Indoor temperature (°CDB)				
		16.0	18.0	20.0	22.0	24.0
(°CDB)	(°CWB)	TC	TC	TC	TC	TC
-15.0	-16.0	1.54	1.50	1.46	1.43	1.39
-10.0	-11.0	1.91	1.87	1.82	1.78	1.73
-5.0	-7.0	2.27	2.22	2.17	2.11	2.06
0.0	-2.0	2.68	2.61	2.55	2.48	2.42
5.0	3.0	2.94	2.87	2.80	2.73	2.66
7.0	6.0	2.94	2.87	2.80	2.73	2.66
10.0	8.0	2.94	2.87	2.80	2.73	2.66
15.0	10.0	2.94	2.87	2.80	2.73	2.66
20.0	15.0	2.94	2.87	2.80	2.73	2.66
24.0	18.0	2.94	2.87	2.80	2.73	2.66

Model: ASEH09KGTG

Outdoor temperature		Indoor temperature (°CDB)				
		16.0	18.0	20.0	22.0	24.0
(°CDB)	(°CWB)	TC	TC	TC	TC	TC
-15.0	-16.0	1.97	1.93	1.88	1.83	1.79
-10.0	-11.0	2.46	2.40	2.34	2.28	2.22
-5.0	-7.0	2.92	2.86	2.79	2.72	2.65
0.0	-2.0	3.44	3.36	3.28	3.19	3.11
5.0	3.0	3.78	3.69	3.60	3.51	3.42
7.0	6.0	3.78	3.69	3.60	3.51	3.42
10.0	8.0	3.78	3.69	3.60	3.51	3.42
15.0	10.0	3.78	3.69	3.60	3.51	3.42
20.0	15.0	3.78	3.69	3.60	3.51	3.42
24.0	18.0	3.78	3.69	3.60	3.51	3.42

Model: ASEH12KGTG

Outdoor temperature		Indoor temperature (°CDB)				
		16.0	18.0	20.0	22.0	24.0
(°CDB)	(°CWB)	TC	TC	TC	TC	TC
-15.0	-16.0	2.63	2.57	2.51	2.44	2.38
-10.0	-11.0	3.28	3.20	3.12	3.04	2.97
-5.0	-7.0	3.90	3.81	3.71	3.62	3.53
0.0	-2.0	4.59	4.48	4.37	4.26	4.15
5.0	3.0	5.04	4.92	4.80	4.68	4.56
7.0	6.0	5.04	4.92	4.80	4.68	4.56
10.0	8.0	5.04	4.92	4.80	4.68	4.56
15.0	10.0	5.04	4.92	4.80	4.68	4.56
20.0	15.0	5.04	4.92	4.80	4.68	4.56
24.0	18.0	5.04	4.92	4.80	4.68	4.56

Model: ASEH14KGTG

Outdoor temperature		Indoor temperature (°CDB)				
		16.0	18.0	20.0	22.0	24.0
(°CDB)	(°CWB)	TC	TC	TC	TC	TC
-15.0	-16.0	3.07	3.00	2.93	2.85	2.78
-10.0	-11.0	3.82	3.73	3.64	3.55	3.46
-5.0	-7.0	4.55	4.44	4.33	4.22	4.12
0.0	-2.0	5.35	5.22	5.10	4.97	4.84
5.0	3.0	5.88	5.74	5.60	5.46	5.32
7.0	6.0	5.88	5.74	5.60	5.46	5.32
10.0	8.0	5.88	5.74	5.60	5.46	5.32
15.0	10.0	5.88	5.74	5.60	5.46	5.32
20.0	15.0	5.88	5.74	5.60	5.46	5.32
24.0	18.0	5.88	5.74	5.60	5.46	5.32

Model: ASEH05KNCA

Outdoor temperature		Indoor temperature (°CDB)				
		16.0	18.0	20.0	22.0	24.0
(°CDB)	(°CWB)	TC	TC	TC	TC	TC
-15.0	-16.0	1.15	1.12	1.10	1.07	1.04
-10.0	-11.0	1.43	1.40	1.37	1.33	1.30
-5.0	-7.0	1.71	1.67	1.62	1.58	1.54
0.0	-2.0	2.01	1.96	1.91	1.86	1.82
5.0	3.0	2.21	2.15	2.10	2.05	2.00
7.0	6.0	2.21	2.15	2.10	2.05	2.00
10.0	8.0	2.21	2.15	2.10	2.05	2.00
15.0	10.0	2.21	2.15	2.10	2.05	2.00
20.0	15.0	2.21	2.15	2.10	2.05	2.00
24.0	18.0	2.21	2.15	2.10	2.05	2.00

Model: ASEH07KNCA

Outdoor temperature		Indoor temperature (°CDB)				
		16.0	18.0	20.0	22.0	24.0
(°CDB)	(°CWB)	TC	TC	TC	TC	TC
-15.0	-16.0	1.54	1.50	1.46	1.43	1.39
-10.0	-11.0	1.91	1.87	1.82	1.78	1.73
-5.0	-7.0	2.27	2.22	2.17	2.11	2.06
0.0	-2.0	2.68	2.61	2.55	2.48	2.42
5.0	3.0	2.94	2.87	2.80	2.73	2.66
7.0	6.0	2.94	2.87	2.80	2.73	2.66
10.0	8.0	2.94	2.87	2.80	2.73	2.66
15.0	10.0	2.94	2.87	2.80	2.73	2.66
20.0	15.0	2.94	2.87	2.80	2.73	2.66
24.0	18.0	2.94	2.87	2.80	2.73	2.66

Model: ASEH09KNCA

Outdoor temperature		Indoor temperature (°CDB)				
		16.0	18.0	20.0	22.0	24.0
(°CDB)	(°CWB)	TC	TC	TC	TC	TC
-15.0	-16.0	1.97	1.93	1.88	1.83	1.79
-10.0	-11.0	2.46	2.40	2.34	2.28	2.22
-5.0	-7.0	2.92	2.86	2.79	2.72	2.65
0.0	-2.0	3.44	3.36	3.28	3.19	3.11
5.0	3.0	3.78	3.69	3.60	3.51	3.42
7.0	6.0	3.78	3.69	3.60	3.51	3.42
10.0	8.0	3.78	3.69	3.60	3.51	3.42
15.0	10.0	3.78	3.69	3.60	3.51	3.42
20.0	15.0	3.78	3.69	3.60	3.51	3.42
24.0	18.0	3.78	3.69	3.60	3.51	3.42

Model: ASEH12KNCA

Outdoor temperature		Indoor temperature (°CDB)				
		16.0	18.0	20.0	22.0	24.0
(°CDB)	(°CWB)	TC	TC	TC	TC	TC
-15.0	-16.0	2.47	2.41	2.35	2.29	2.23
-10.0	-11.0	3.07	3.00	2.93	2.85	2.78
-5.0	-7.0	3.66	3.57	3.48	3.39	3.31
0.0	-2.0	4.30	4.20	4.09	3.99	3.89
5.0	3.0	4.73	4.61	4.50	4.39	4.28
7.0	6.0	4.73	4.61	4.50	4.39	4.28
10.0	8.0	4.73	4.61	4.50	4.39	4.28
15.0	10.0	4.73	4.61	4.50	4.39	4.28
20.0	15.0	4.73	4.61	4.50	4.39	4.28
24.0	18.0	4.73	4.61	4.50	4.39	4.28

Model: ASEG18KMTE

Outdoor temperature		Indoor temperature (°CDB)				
		16.0	18.0	20.0	22.0	24.0
(°CDB)	(°CWB)	TC	TC	TC	TC	TC
-15.0	-16.0	3.69	3.60	3.51	3.42	3.33
-10.0	-11.0	4.59	4.48	4.37	4.26	4.15
-5.0	-7.0	5.46	5.33	5.20	5.07	4.94
0.0	-2.0	6.42	6.27	6.11	5.96	5.81
5.0	3.0	7.06	6.89	6.72	6.55	6.38
7.0	6.0	7.06	6.89	6.72	6.55	6.38
10.0	8.0	7.06	6.89	6.72	6.55	6.38
15.0	10.0	7.06	6.89	6.72	6.55	6.38
20.0	15.0	7.06	6.89	6.72	6.55	6.38
24.0	18.0	7.06	6.89	6.72	6.55	6.38

Model: ASEG22KMTE

Outdoor temperature		Indoor temperature (°CDB)				
		16.0	18.0	20.0	22.0	24.0
(°CDB)	(°CWB)	TC	TC	TC	TC	TC
-15.0	-16.0	4.66	4.55	4.44	4.33	4.22
-10.0	-11.0	5.80	5.67	5.53	5.39	5.25
-5.0	-7.0	6.91	6.74	6.58	6.41	6.25
0.0	-2.0	8.12	7.93	7.73	7.54	7.35
5.0	3.0	8.93	8.71	8.50	8.29	8.08
7.0	6.0	8.93	8.71	8.50	8.29	8.08
10.0	8.0	8.93	8.71	8.50	8.29	8.08
15.0	10.0	8.93	8.71	8.50	8.29	8.08
20.0	15.0	8.93	8.71	8.50	8.29	8.08
24.0	18.0	8.93	8.71	8.50	8.29	8.08

Model: ASEG24KMTE

Outdoor temperature		Indoor temperature (°CDB)				
		16.0	18.0	20.0	22.0	24.0
(°CDB)	(°CWB)	TC	TC	TC	TC	TC
-15.0	-16.0	4.76	4.64	4.53	4.42	4.30
-10.0	-11.0	5.92	5.78	5.64	5.50	5.36
-5.0	-7.0	7.04	6.88	6.71	6.54	6.37
0.0	-2.0	8.28	8.09	7.89	7.69	7.49
5.0	3.0	9.10	8.89	8.67	8.45	8.24
7.0	6.0	9.10	8.89	8.67	8.45	8.24
10.0	8.0	9.10	8.89	8.67	8.45	8.24
15.0	10.0	9.10	8.89	8.67	8.45	8.24
20.0	15.0	9.10	8.89	8.67	8.45	8.24
24.0	18.0	9.10	8.89	8.67	8.45	8.24

NOTES:

- TC: Total Capacity (kW)
- Values mentioned in the table are based on the following conditions:
  - Pipe length: 5 m, Height difference: 0 m (Outdoor unit—Indoor unit)

● Ceiling type

Model: ABEG18KRTA

Outdoor temperature		Indoor temperature (°CDB)				
		16.0	18.0	20.0	22.0	24.0
(°CDB)	(°CWB)	TC	TC	TC	TC	TC
-15.0	-16.0	3.69	3.60	3.51	3.42	3.33
-10.0	-11.0	4.59	4.48	4.37	4.26	4.15
-5.0	-7.0	5.46	5.33	5.20	5.07	4.94
0.0	-2.0	6.42	6.27	6.11	5.96	5.81
5.0	3.0	7.06	6.89	6.72	6.55	6.38
7.0	6.0	7.06	6.89	6.72	6.55	6.38
10.0	8.0	7.06	6.89	6.72	6.55	6.38
15.0	10.0	7.06	6.89	6.72	6.55	6.38
20.0	15.0	7.06	6.89	6.72	6.55	6.38
24.0	18.0	7.06	6.89	6.72	6.55	6.38

Model: ABEG22KRTA

Outdoor temperature		Indoor temperature (°CDB)				
		16.0	18.0	20.0	22.0	24.0
(°CDB)	(°CWB)	TC	TC	TC	TC	TC
-15.0	-16.0	4.66	4.55	4.44	4.33	4.22
-10.0	-11.0	5.80	5.67	5.53	5.39	5.25
-5.0	-7.0	6.91	6.74	6.58	6.41	6.25
0.0	-2.0	8.12	7.93	7.73	7.54	7.35
5.0	3.0	8.93	8.71	8.50	8.29	8.08
7.0	6.0	8.93	8.71	8.50	8.29	8.08
10.0	8.0	8.93	8.71	8.50	8.29	8.08
15.0	10.0	8.93	8.71	8.50	8.29	8.08
20.0	15.0	8.93	8.71	8.50	8.29	8.08
24.0	18.0	8.93	8.71	8.50	8.29	8.08

NOTES:

- TC: Total Capacity (kW)
- Values mentioned in the table are based on the following conditions:
  - Pipe length: 5 m, Height difference: 0 m (Outdoor unit—Indoor unit)

● Floor type

Model: AGEG09KVCA

Outdoor temperature		Indoor temperature (°CDB)				
		16.0	18.0	20.0	22.0	24.0
(°CDB)	(°CWB)	TC	TC	TC	TC	TC
-15.0	-16.0	1.97	1.93	1.88	1.83	1.79
-10.0	-11.0	2.46	2.40	2.34	2.28	2.22
-5.0	-7.0	2.92	2.86	2.79	2.72	2.65
0.0	-2.0	3.44	3.36	3.28	3.19	3.11
5.0	3.0	3.78	3.69	3.60	3.51	3.42
7.0	6.0	3.78	3.69	3.60	3.51	3.42
10.0	8.0	3.78	3.69	3.60	3.51	3.42
15.0	10.0	3.78	3.69	3.60	3.51	3.42
20.0	15.0	3.78	3.69	3.60	3.51	3.42
24.0	18.0	3.78	3.69	3.60	3.51	3.42

Model: AGEG12KVCA

Outdoor temperature		Indoor temperature (°CDB)				
		16.0	18.0	20.0	22.0	24.0
(°CDB)	(°CWB)	TC	TC	TC	TC	TC
-15.0	-16.0	2.63	2.57	2.51	2.44	2.38
-10.0	-11.0	3.28	3.20	3.12	3.04	2.97
-5.0	-7.0	3.90	3.81	3.71	3.62	3.53
0.0	-2.0	4.59	4.48	4.37	4.26	4.15
5.0	3.0	5.04	4.92	4.80	4.68	4.56
7.0	6.0	5.04	4.92	4.80	4.68	4.56
10.0	8.0	5.04	4.92	4.80	4.68	4.56
15.0	10.0	5.04	4.92	4.80	4.68	4.56
20.0	15.0	5.04	4.92	4.80	4.68	4.56
24.0	18.0	5.04	4.92	4.80	4.68	4.56

Model: AGEG14KVCA

Outdoor temperature		Indoor temperature (°CDB)				
		16.0	18.0	20.0	22.0	24.0
(°CDB)	(°CWB)	TC	TC	TC	TC	TC
-15.0	-16.0	3.07	3.00	2.93	2.85	2.78
-10.0	-11.0	3.82	3.73	3.64	3.55	3.46
-5.0	-7.0	4.55	4.44	4.33	4.22	4.12
0.0	-2.0	5.35	5.22	5.10	4.97	4.84
5.0	3.0	5.88	5.74	5.60	5.46	5.32
7.0	6.0	5.88	5.74	5.60	5.46	5.32
10.0	8.0	5.88	5.74	5.60	5.46	5.32
15.0	10.0	5.88	5.74	5.60	5.46	5.32
20.0	15.0	5.88	5.74	5.60	5.46	5.32
24.0	18.0	5.88	5.74	5.60	5.46	5.32

NOTES:

- TC: Total Capacity (kW)
- Values mentioned in the table are based on the following conditions:
  - Pipe length: 5 m, Height difference: 0 m (Outdoor unit—Indoor unit)

7. Capacity compensation rate for pipe length and height difference

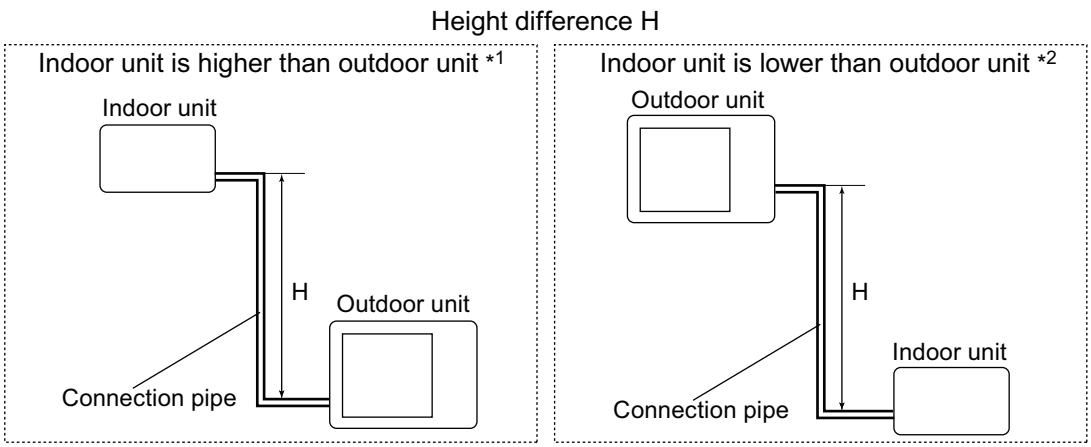

7-1. Model: AOEG30KBTA4

NOTE: Values mentioned in the table are calculated based on the maximum capacity.

■ Indoor unit: 5,000 Btu/h and 7,000 Btu/h

Cooling		Pipe length						
		m	2.5	5	10	15	20	25
Height difference H (m)	Indoor unit is higher than outdoor unit *1	15	—	—	—	0.955	0.941	0.927
		10	—	—	0.976	0.962	0.949	0.935
		5	—	0.992	0.984	0.970	0.956	0.942
		2.5	0.999	0.996	0.988	0.974	0.960	0.946
		0	1.003	1.000	0.992	0.978	0.964	0.950
	Indoor unit is lower than outdoor unit *2	-2.5	1.003	1.000	0.992	0.978	0.964	0.950
		-5	—	1.000	0.992	0.978	0.964	0.950
		-10	—	—	0.992	0.978	0.964	0.950
		-15	—	—	—	0.978	0.964	0.950

Heating		Pipe length						
		m	2.5	5	10	15	20	25
Height difference H (m)	Indoor unit is higher than outdoor unit *1	15	—	—	—	0.976	0.957	0.938
		10	—	—	0.991	0.976	0.957	0.938
		5	—	1.000	0.991	0.976	0.957	0.938
		2.5	0.990	1.000	0.991	0.976	0.957	0.938
		0	0.990	1.000	0.991	0.976	0.957	0.938
	Indoor unit is lower than outdoor unit *2	-2.5	0.988	0.997	0.989	0.974	0.955	0.936
		-5	—	0.995	0.986	0.971	0.952	0.933
		-10	—	—	0.981	0.966	0.947	0.929
		-15	—	—	—	0.961	0.943	0.924

■ Indoor unit: 9,000 Btu/h

Cooling		Pipe length						
		m	2.5	5	10	15	20	25
Height difference H (m)	Indoor unit is higher than outdoor unit *1	15	—	—	—	0.956	0.942	0.928
		10	—	—	0.977	0.963	0.950	0.936
		5	—	0.992	0.985	0.971	0.957	0.943
		2.5	1.003	0.996	0.989	0.975	0.961	0.947
		0	1.007	1.000	0.993	0.979	0.965	0.951
	Indoor unit is lower than outdoor unit *2	-2.5	1.007	1.000	0.993	0.979	0.965	0.951
		-5	—	1.000	0.993	0.979	0.965	0.951
		-10	—	—	0.993	0.979	0.965	0.951
		-15	—	—	—	0.979	0.965	0.951

Heating		Pipe length						
		m	2.5	5	10	15	20	25
Height difference H (m)	Indoor unit is higher than outdoor unit *1	15	—	—	—	0.977	0.958	0.939
		10	—	—	0.993	0.977	0.958	0.939
		5	—	1.000	0.993	0.977	0.958	0.939
		2.5	0.993	1.000	0.993	0.977	0.958	0.939
		0	0.993	1.000	0.993	0.977	0.958	0.939
	Indoor unit is lower than outdoor unit *2	-2.5	0.991	0.997	0.991	0.975	0.956	0.937
		-5	—	0.995	0.988	0.972	0.954	0.934
		-10	—	—	0.983	0.967	0.949	0.930
		-15	—	—	—	0.962	0.944	0.925

■ Indoor unit: 12,000 Btu/h

Cooling		Pipe length						
		m	2.5	5	10	15	20	25
Height difference H (m)	Indoor unit is higher than outdoor unit *1	15	—	—	—	0.937	0.912	0.888
		10	—	—	0.970	0.944	0.919	0.896
		5	—	0.992	0.978	0.952	0.927	0.903
		2.5	1.010	0.996	0.982	0.956	0.930	0.907
		0	1.014	1.000	0.986	0.960	0.934	0.910
	Indoor unit is lower than outdoor unit *2	-2.5	1.014	1.000	0.986	0.960	0.934	0.910
		-5	—	1.000	0.986	0.960	0.934	0.910
		-10	—	—	0.986	0.960	0.934	0.910
		-15	—	—	—	0.960	0.934	0.910

Heating		Pipe length						
		m	2.5	5	10	15	20	25
Height difference H (m)	Indoor unit is higher than outdoor unit *1	15	—	—	—	0.977	0.958	0.938
		10	—	—	0.993	0.977	0.958	0.938
		5	—	1.000	0.993	0.977	0.958	0.938
		2.5	0.995	1.000	0.993	0.977	0.958	0.938
		0	0.995	1.000	0.993	0.977	0.958	0.938
	Indoor unit is lower than outdoor unit *2	-2.5	0.993	0.997	0.991	0.975	0.956	0.936
		-5	—	0.995	0.988	0.972	0.953	0.933
		-10	—	—	0.983	0.967	0.949	0.929
		-15	—	—	—	0.962	0.944	0.924

■ Indoor unit: 14,000 Btu/h

Cooling		Pipe length						
		m	2.5	5	10	15	20	25
Height difference H (m)	Indoor unit is higher than outdoor unit *1	15	—	—	—	0.955	0.937	0.922
		10	—	—	0.974	0.962	0.945	0.930
		5	—	0.992	0.982	0.970	0.952	0.937
		2.5	0.999	0.996	0.986	0.974	0.956	0.941
		0	1.005	1.000	0.990	0.978	0.960	0.945
	Indoor unit is lower than outdoor unit *2	-2.5	1.005	1.000	0.990	0.978	0.960	0.945
		-5	—	1.000	0.990	0.978	0.960	0.945
		-10	—	—	0.990	0.978	0.960	0.945
		-15	—	—	—	0.978	0.960	0.945

Heating		Pipe length						
		m	2.5	5	10	15	20	25
Height difference H (m)	Indoor unit is higher than outdoor unit *1	15	—	—	—	0.972	0.945	0.919
		10	—	—	0.992	0.972	0.945	0.919
		5	—	1.000	0.992	0.972	0.945	0.919
		2.5	1.000	1.000	0.992	0.972	0.945	0.919
		0	1.000	1.000	0.992	0.972	0.945	0.919
	Indoor unit is lower than outdoor unit *2	-2.5	0.998	0.997	0.990	0.970	0.943	0.917
		-5	—	0.995	0.987	0.967	0.940	0.914
		-10	—	—	0.982	0.962	0.935	0.910
		-15	—	—	—	0.957	0.930	0.905

■ Indoor unit: 18,000 Btu/h

Cooling		Pipe length						
		m	2.5	5	10	15	20	25
Height difference H (m)	Indoor unit is higher than outdoor unit *1	15	—	—	—	0.968	0.961	0.954
		10	—	—	0.982	0.976	0.969	0.962
		5	—	0.992	0.990	0.984	0.977	0.970
		2.5	0.998	0.996	0.994	0.988	0.981	0.974
		0	1.002	1.000	0.998	0.992	0.985	0.978
	Indoor unit is lower than outdoor unit *2	-2.5	1.002	1.000	0.998	0.992	0.985	0.978
		-5	—	1.000	0.998	0.992	0.985	0.978
		-10	—	—	0.998	0.992	0.985	0.978
		-15	—	—	—	0.992	0.985	0.978

Heating		Pipe length						
		m	2.5	5	10	15	20	25
Height difference H (m)	Indoor unit is higher than outdoor unit *1	15	—	—	—	0.967	0.943	0.917
		10	—	—	0.990	0.967	0.943	0.917
		5	—	1.000	0.990	0.967	0.943	0.917
		2.5	1.010	1.000	0.990	0.967	0.943	0.917
		0	1.010	1.000	0.990	0.967	0.943	0.917
	Indoor unit is lower than outdoor unit *2	-2.5	1.008	0.997	0.988	0.965	0.941	0.915
		-5	—	0.995	0.985	0.962	0.938	0.912
		-10	—	—	0.980	0.958	0.933	0.908
		-15	—	—	—	0.953	0.929	0.903

■ Indoor unit: 22,000 Btu/h

Cooling		Pipe length						
		m	2.5	5	10	15	20	25
Height difference H (m)	Indoor unit is higher than outdoor unit *1	15	—	—	—	0.978	0.969	0.953
		10	—	—	0.986	0.986	0.977	0.961
		5	—	0.992	0.994	0.994	0.984	0.968
		2.5	0.993	0.996	0.998	0.998	0.988	0.972
		0	0.997	1.000	1.002	1.002	0.992	0.976
	Indoor unit is lower than outdoor unit *2	-2.5	0.997	1.000	1.002	1.002	0.992	0.976
		-5	—	1.000	1.002	1.002	0.992	0.976
		-10	—	—	1.002	1.002	0.992	0.976
		-15	—	—	—	1.002	0.992	0.976

Heating		Pipe length						
		m	2.5	5	10	15	20	25
Height difference H (m)	Indoor unit is higher than outdoor unit *1	15	—	—	—	0.964	0.939	0.913
		10	—	—	0.988	0.964	0.939	0.913
		5	—	1.000	0.988	0.964	0.939	0.913
		2.5	1.008	1.000	0.988	0.964	0.939	0.913
		0	1.008	1.000	0.988	0.964	0.939	0.913
	Indoor unit is lower than outdoor unit *2	-2.5	1.006	0.997	0.986	0.962	0.937	0.911
		-5	—	0.995	0.983	0.959	0.934	0.909
		-10	—	—	0.978	0.954	0.929	0.904
		-15	—	—	—	0.949	0.925	0.899

■ Indoor unit: 24,000 Btu/h

Cooling		Pipe length						
		m	2.5	5	10	15	20	25
Height difference H (m)	Indoor unit is higher than outdoor unit *1	15	—	—	—	0.978	0.969	0.953
		10	—	—	0.986	0.986	0.977	0.961
		5	—	0.992	0.994	0.994	0.984	0.968
		2.5	0.993	0.996	0.998	0.998	0.988	0.972
		0	0.997	1.000	1.002	1.002	0.992	0.976
	Indoor unit is lower than outdoor unit *2	-2.5	0.997	1.000	1.002	1.002	0.992	0.976
		-5	—	1.000	1.002	1.002	0.992	0.976
		-10	—	—	1.002	1.002	0.992	0.976
		-15	—	—	—	1.002	0.992	0.976

Heating		Pipe length						
		m	2.5	5	10	15	20	25
Height difference H (m)	Indoor unit is higher than outdoor unit *1	15	—	—	—	0.964	0.939	0.913
		10	—	—	0.988	0.964	0.939	0.913
		5	—	1.000	0.988	0.964	0.939	0.913
		2.5	1.008	1.000	0.988	0.964	0.939	0.913
		0	1.008	1.000	0.988	0.964	0.939	0.913
	Indoor unit is lower than outdoor unit *2	-2.5	1.006	0.997	0.986	0.962	0.937	0.911
		-5	—	0.995	0.983	0.959	0.934	0.909
		-10	—	—	0.978	0.954	0.929	0.904
		-15	—	—	—	0.949	0.925	0.899

OUTDOOR UNIT
AOEG30KBTA4

8. Additional charge calculation

8-1. Model: AOEG30KBTA4

Refrigerant type		R32
Refrigerant amount	g	2,200

Refrigerant charge						
Total pipe length	m	40 or less	50	60	70 (Max.)	20 g/m
Additional charge amount	g	0	200	400	600	

OUTDOOR UNIT
AOEG30KBTA4

9. Airflow

9-1. Model: AOEG30KBTA4

● Cooling

m^3/h	2,400
l/s	667
CFM	1,413

● Heating

m^3/h	2,950
l/s	820
CFM	1,736

10. Operation noise (sound pressure)

10-1. Noise level curve

■ Model: AOEG30KBTA4

● Cooling

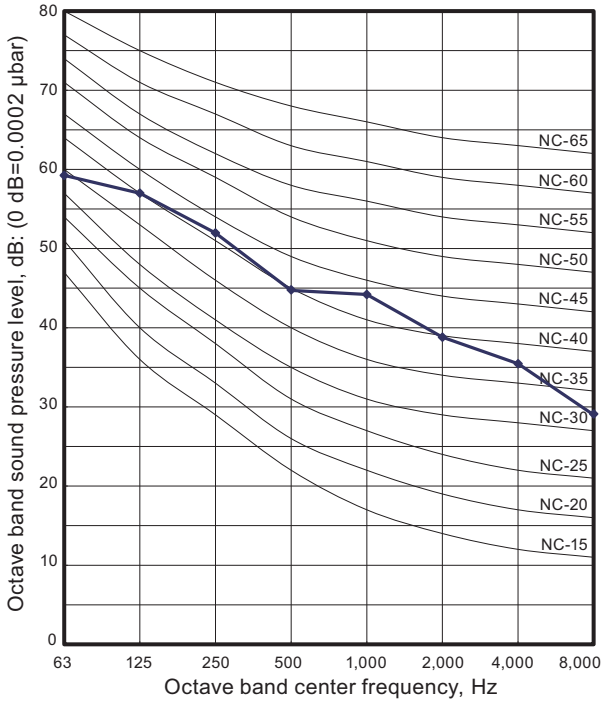

● Heating

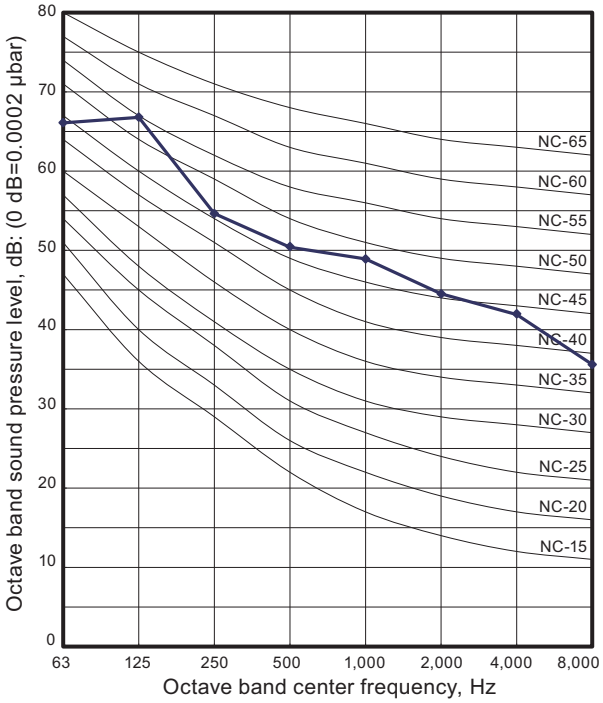

10-2. Sound level check point

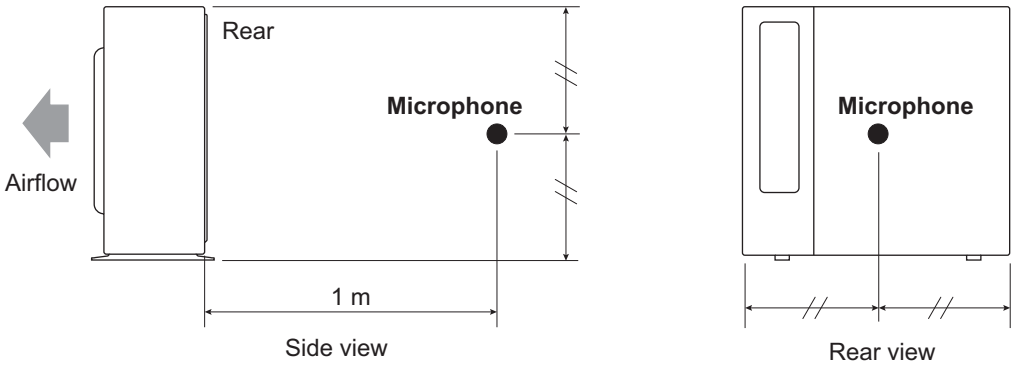

NOTE: Detailed shape of the actual outdoor unit might be slightly different from the one illustrated above.

11. Electrical characteristics

Model name				AOEG30KBTA4
Power supply	Voltage		V	230 ~
	Frequency		Hz	50
Maximum operating current *1			A	18.5
Starting current			A	9.4
Wiring spec. *2	Main fuse (Circuit breaker) current		A	25
	Power cable		mm^2	2.5
	Connection cable *3	Cross-sectional area		1.5
		Limited wiring length	m	26

*1: Maximum operating current is the total current of the indoor unit and the outdoor unit.

*2: Selected sample based on Japan Electrotechnical Standards and Codes Committee E0005. As the regulations of wire size and circuit breaker differ in each country or region, select appropriate devices complied to the regional standard.

*3: This is the wiring length in case voltage descent is less than 2%. When the wiring length becomes longer, select the wiring of a more larger diameter.

12. Safety devices

Type of protection	Protection form		Model
			AOEG30KBTA4
Circuit protection	Current fuse (Main PCB)		250 V, 5 A 250 V, 20 A 250 V, 3.15 A
Fan motor protection	Thermal protector	Activate	125 ±10°C Fan motor stop
		Reset	120 ±10°C Fan motor restart
Compressor protection	Temperature thermistor (Discharge temp.)	Activate	110°C Compressor stop
		Reset	After 7 minutes Compressor restart
	Temperature thermistor (Compressor bottom temp.)	Activate	108°C Compressor stop
		Reset	After 3 minutes, and 80°C or less Compressor restart
	Thermal protection program (Outdoor temp.) (Only in COOL or DRY mode)	Activate	-20°C Compressor stop
		Reset	-15°C Compressor restart

OUTDOOR UNIT
AOEG30KBTA4

13. Function settings

13-1. Setting methods

⚠ WARNING

Never touch electrical components such as the terminal blocks or reactor except the switch on the display board. It may cause a serious accident such as electric shock.

⚠ CAUTION

- Once refrigerant charging is completed, be sure to open the valve prior to performing the local settings. Otherwise, the compressor may fail.
- Discharge any static electricity from your body before touching the push switches. Never touch any terminal or pattern of any parts on the control board.

The positions of the switches on the outdoor unit control board are shown in the figure below.

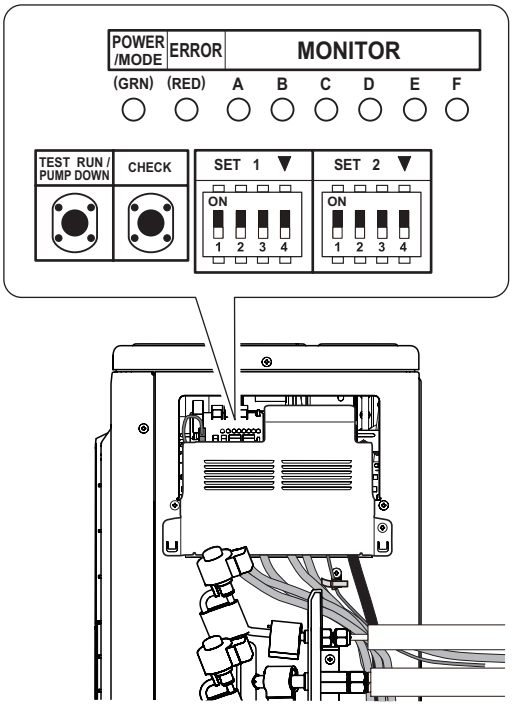

■ Setting method

Various settings can be adjusted by changing DIP switches and push switches on the PCB of the outdoor unit.

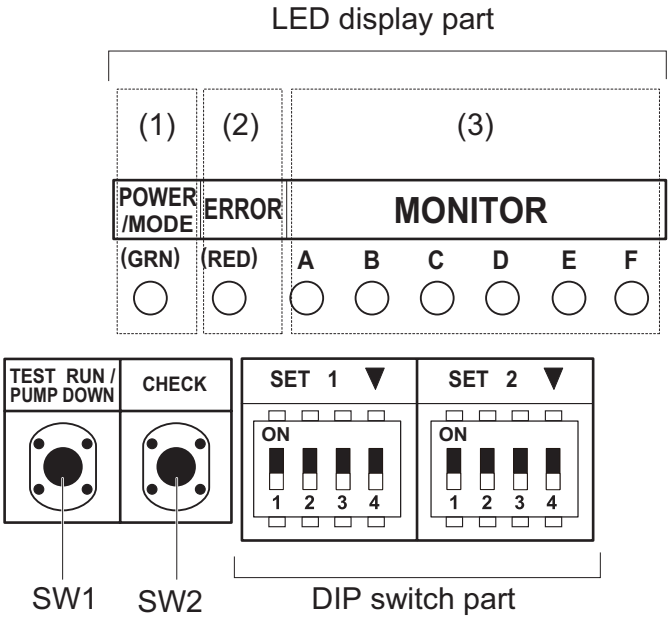

1. Be sure to disconnect the power supply or turn off the breaker.
2. Change the DIP switch setting according to the required setting.

■ Description of display

LED lamp				Function or operation method
(1)	POWER/MODE		Green	• Turns on when the power supply is ON (Including when error occurs). • Indicate the MODE by the number of flashes when the installation function is active.
(2)	ERROR		Red	Flashes at high-speed when there is an error.
(3)	MONITOR	A	Red	• Displays the location and contents of errors when there is an error. (Refer to Chapter 14-3. "Error code" on page 438 for details.) • Displays when check run is activated. (Refer to Chapter 14-1. "Check run" on page 431 for details.)
		B	Red	
		C	Red	
		D	Red	
		E	Red	
		F	Red	

Switch		Function or operation method	Factory setting
SW1	Push	• For the test run start and stop. • For the pump down start and stop.	—
SW2	Push	• For when check run function is activated. • For displaying the check run. • For resetting the Automatic wiring correction memory.	—
SET1-1	DIP	For selecting cooling or heating during test operation.	OFF
SET1-2	DIP	For switching SW1 operation.	OFF
SET1-3	DIP	(Prohibited)	OFF (Do not change)
SET1-4	DIP	For outdoor unit low noise operation function.	OFF
SET2-1	DIP	For selecting outdoor unit low noise operation function.	OFF
SET2-2	DIP	(Prohibited)	OFF (Do not change)
SET2-3	DIP	Changing the current limit	OFF
SET2-4	DIP		

Be sure to disconnect the power supply or turn off the breaker before changing the DIP switch setting.

13-2. Outdoor unit low noise operation function

Change the outdoor unit low noise operation by using this setting.

⚠ CAUTION

- When the low noise operation function is working, cooling and heating capacity will decrease.
- When changing the settings, explain to the customer beforehand that the capacity decreases.

SET1-4	Setting	Factory setting
ON	Function works	
OFF	Function not working	♦

SET2-1	Setting	Factory setting
ON	Lower	
OFF	Low	♦

13-3. Current limit function

Current value can be limited to meet specific current requirements.

NOTE: When changing this setting, explain to the customer beforehand that the capacity decreases.

SET2-3	SET2-4	Current	Factory setting
OFF	OFF	Full	♦
ON	OFF	16.0 A	
OFF	ON	12.0 A	

14. Check and test

14-1. Check run

- The check run is a function to screen and detect any wiring errors.
- After carrying out the check run, you can use the automatic wiring correction function to correct the wiring.
- Normal operation is possible without using the check run. In this case, use the test run or forced cooling function of the indoor unit to confirm any wiring errors.

■ Things to confirm before starting the check run

To ensure safety, check that the following work, inspections and operations have been completed.

	Check item	Check column
1	Check that all work on the piping connecting the outdoor unit, indoor units has been completed.	
2	Check that all work on the wiring connecting the outdoor unit, indoor units has been completed.	
3	Is there a gas leakage? (At pipe connections [flange connections and brazed areas])	
4	Is the system charged with the specified volume of refrigerant?	
5	Is a breaker installed at the power supply cable of outdoor unit?	
6	Are the wires connected to the terminals without looseness, and in accordance with the specifications?	
7	Is the 3-way valve of the outdoor unit open? (Gas pipe and liquid pipe)	
8	Is the power supply connected for more than 12 hours?	

■ Restrictions applicable when performing the check run

- When the check run starts, all indoor units connected to the outdoor unit will start to run automatically. During the check run, you cannot check the operation of the indoor units separately. After the check run, check the operation of the indoor units separately in normal operation.
- The check run can be used when the temperature is within the operable temperature of the air conditioner.
- In the check run, the air conditioner will automatically switch between cooling and heating depending on the external temperature and internal temperature.
- The check run can be completed in about 30 minutes (cooling) or about 1 hour (heating), but may take more depending on the external and internal temperature conditions etc.
- Do not conduct the check run with all the windows in the room closed.
  Otherwise the room temperature could get too low or too high.
- Depending on the difference of the room temperature of each room, a judgment may be impossible.
- Check run is a special operation so there may be a noise louder than the normal refrigerant flow sound or a creaking noise.

■ Operating procedure for check run

⚠ CAUTION

Initiate check run after more than 12 hours after the power supply is connected.

NOTE: Be sure that the indoor unit and outdoor unit are not operating before starting the check run.

1. Press the CHECK switch for 3 seconds or more.

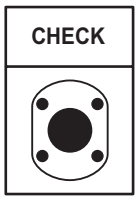

2. The number of indoor units (and the places) connected through the communication lines is displayed.
   - If the displayed number of units (places) and the installed number of units (places) is the same, proceed to step 3.
   - If the displayed number of units (places) and the installed number of units (places) is not the same, shut off the power and check whether the indoor and outdoor communication lines are properly connected.
   - If there is no operation for 1 minute, the LED will return to the original display. (POWER/MODE LED: ON)

Example: When 4 indoor units (A to D) are connected

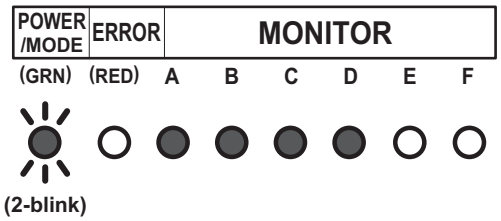

3. Press the CHECK switch for 3 seconds or more again. Check run is initiated.
   - When check run is initiated, all LEDs from A to F will flash. (Preliminary operation)
   - The LED for each indoor unit will switch off in order as check for each unit is completed.

NOTE: To interrupt the check run, press the CHECK switch.

Example: When 4 indoor units (A to D) are connected

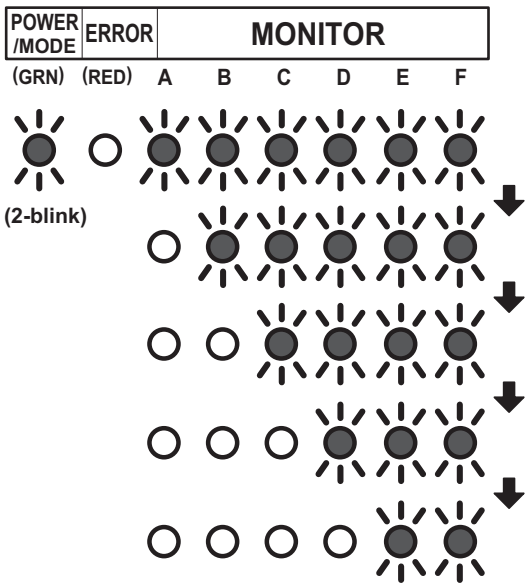

4. After the check run is completed, results will be displayed. Fill the displayed results in the result table accordingly.
   - **If the connection is correct (Example: When 4 indoor units are connected)**
     After the number of connected units are displayed, the LED for each unit will light up in order from A to D.

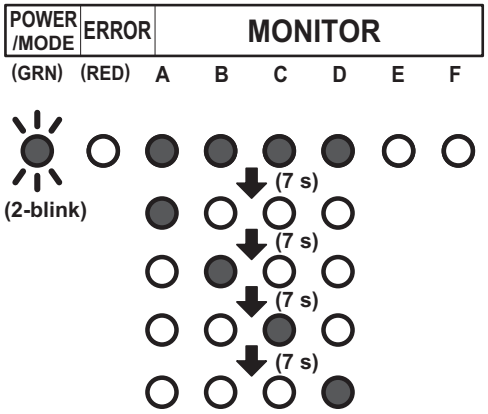

   - **If the connection is incorrect (Example: When connection of B and C of the 4 units are reversed)**
     After the number of connected units are displayed, B and C will light up in reverse.

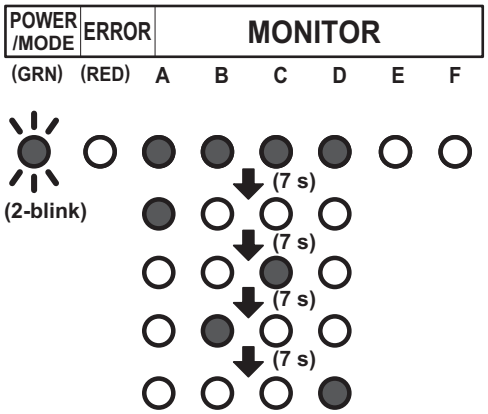

NOTES:

- Automatic wiring correction will not be completed if the power supply is disconnected while displaying the results. To confirm the automatic wiring correction, be sure to carry out step 5.
- If frost is formed on the outdoor unit while displaying the results, automatic defrost function will be operated. Proceed to step 5 after the defrost function is finished.

[How to record the contents]

- Fill the displayed results according to the following example.

Example: When piping A to D is connected but the wires for B and C are connected in reverse.

<Displayed results>

The LEDs will light up in 7 second intervals in the following order.

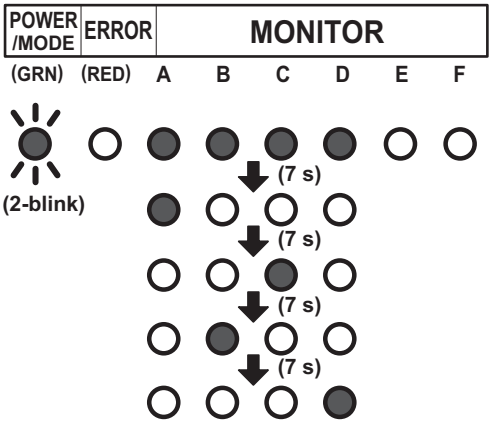

<Example of result table>

a. Write a ● where the LEDs light up in the order that they light up.

	A	B	C	D	E	F
1	●	●	●	●	○	○
2	●	○	○	○	○	○
3	○	○	●	○	○	○
4	○	●	○	○	○	○
5	○	○	○	●	○	○
6	○	○	○	○	○	○
7	○	○	○	○	○	○

b. Based on the results of step (a), record as follows.

- Trace the dotted circle with a pen if multiple places light up.

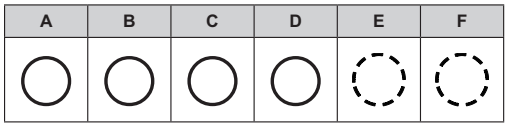

- Write the order from A to D in which the LEDs lit up inside the circle.

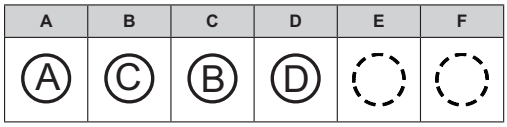

c. Select the correction method.

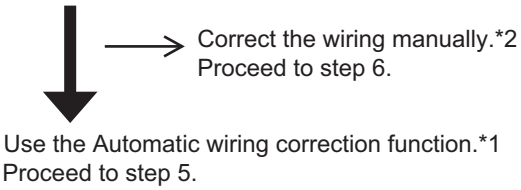

Write down the same results in the label on the reverse side of the service panel.
The results recorded are needed at the time of servicing.

<Result Table>

	A	B	C	D	E	F
1	○	○	○	○	○	○
2	○	○	○	○	○	○
3	○	○	○	○	○	○
4	○	○	○	○	○	○
5	○	○	○	○	○	○
6	○	○	○	○	○	○
7	○	○	○	○	○	○

A	B	C	D	E	F
◌	◌	◌	◌	◌	◌

NOTES:

- *1: By using this function, the wiring is automatically corrected according to the piping.
- *2: When correcting the wiring manually, please disconnect the power supply or turn off the breaker during results display, and then change the wiring manually according to the obtained test results.

  For example, in Example 1, the wirings connected to the terminals B and C is to be exchanged manually.

5. During results display, press the CHECK switch for 3 seconds or more.
   After LEDs A to F have lit in turn, all LEDs will light up indicating that the automatic wiring correction is completed.

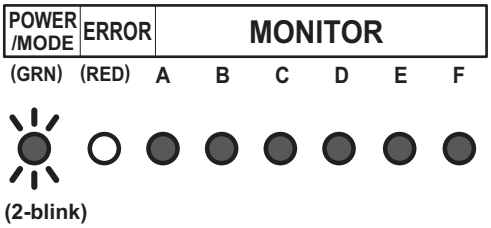

6. Disconnect the power supply or turn off the breaker and wait 10 minutes then turn the power back on and perform test run.

NOTE: If you do not disconnect the power supply or turn off the breaker, normal operation is not possible.

Notices:

- If an error occurs during check run it will be suspended. Correct the error and start check run again.
- After the check run, if automatic wiring correction is carried out, the indoor unit's position will be modified to match the piping. (Note that the display of the optional remote controller changes.)
- If you start check run again after the automatic wiring correction is finished, the modification will be reset.

■ Failure indication of check-run judgment

The check run stops when there is an error, and the LED shows the relevant error indication. When you encounter the errors described here, perform checking by using the cooling test run of the indoor unit.

- **Temperature out of range judgment**

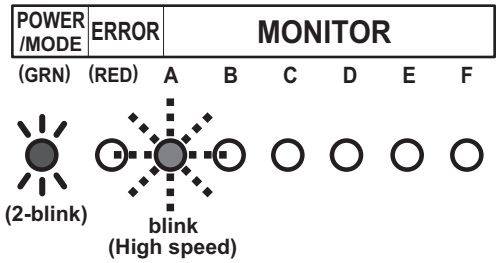

- **Wiring/piping number difference**

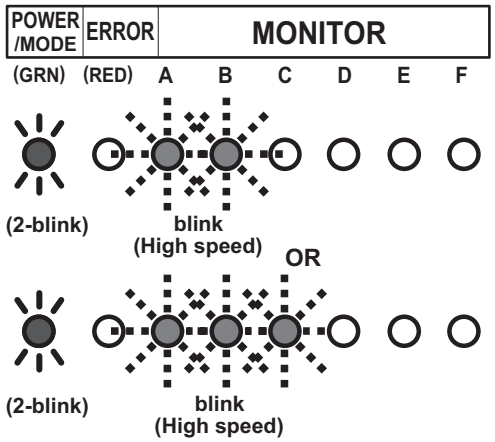

■ Redisplaying the results of check run

- When checking the content of automatic wiring correction, push the CHECK switch. The results of the check run is displayed. You can compare the result that is recorded in step (4) of Chapter 14-1-3. "Operating procedure for check run" on page 432.
- If the automatic wiring correction is not completed, the POWER/MODE LED blinks twice and the MONITOR LED turns off.

■ Memory resetting of automatic wiring correction

⚠ CAUTION

When relocating the unit, reset the memory beforehand, or the unit may not function normally.

1. Push the CHECK switch.
   The LED lights as shown in "Redisplaying the results of check run" on page 436.
2. When the LED is on, press the CHECK switch for more than 3 seconds.
3. The LEDs from A to F light in sequence, and then all LEDs light to indicate the completion of the memory resetting of automatic wiring correction.
4. Disconnect the power supply or turn off the breaker.

14-2. Test run

⚠ CAUTION

Always connect the power supply 12 hours prior to the start of the operation in order to protect the compressor.

1. Indoor unit
   a. Is the drain normal?
   b. Is there any abnormal noise and vibration during operation?

2. Outdoor unit
   a. Is there any abnormal noise and vibration during operation?
   b. Will noise, wind, or drain water from the unit disturb the neighbors?
   c. Is there any gas leakage?

   • Do not operate the air conditioner in the test running state for a long time.

■ Test run method

Be sure to temporarily disconnect the power supply or turn off the breaker before changing the DIP switch settings.

1. Check the 3-way valves (both at the liquid side and gas side) are opened. Confirm that the DIP switch SET1-2 is switched off.
2. Set the operation mode to COOL or HEAT. When switching the DIP switch SET1-1 between HEAT and COOL, disconnect the power supply or turn off the circuit breaker beforehand.

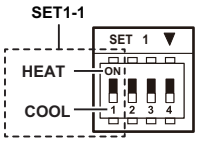

   • In the first test run, be sure to set the operation mode to COOL.
   • The operation mode cannot be switched between COOL and HEAT during the test run. To switch the operation mode between COOL and HEAT, stop the test run, switch the operation mode, and then start the test run again.

3. Push TEST RUN switch for more than 3 seconds. The POWER / MODE LED flashes once.

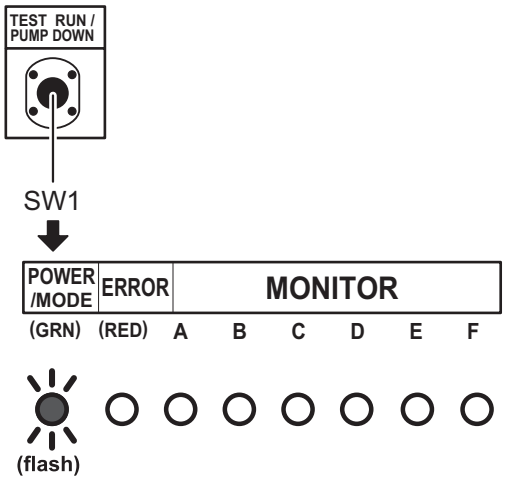

4. Confirm operating status.
5. Push TEST RUN switch for more than 3 seconds.

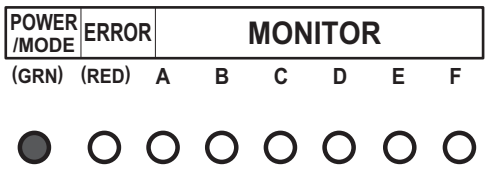

POWER/MODE LED will turn on, and test run stops.

14-3. Error code

If an error occurs, the LED lights to inform the relevant location and the code.
When error occurs, the error LED blinks at high speed.

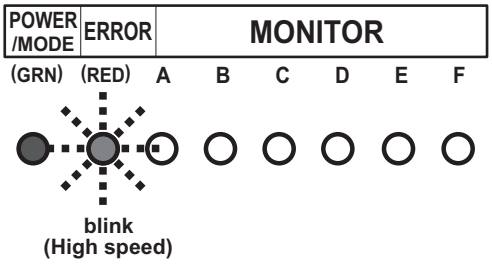

■ Error location

LEDs A to F of MONITOR light and indicate the location of the error. In the case of an overall error, LEDs A to F of MONITOR do not light.

Example: Coil error on indoor unit B

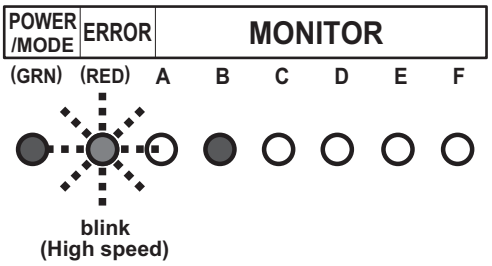

■ Error code display

While the error is occurring, briefly push the SW1. The error code is displayed.

Example: Coil error (Error cord = 9A.1)

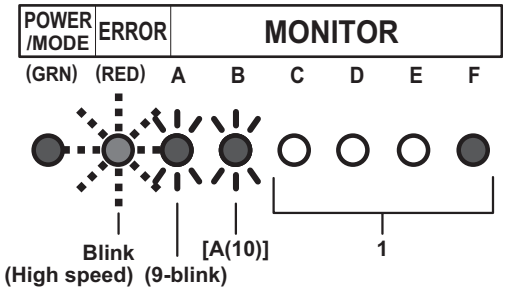

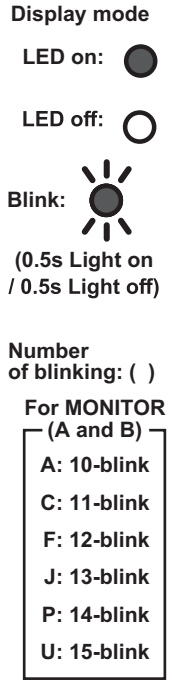

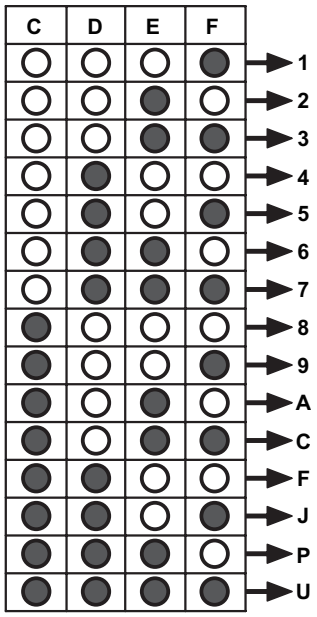

Error code	Error type
11.3	Serial communication error
11.4	Serial communication error during operation
16.5	Communication error between controller and outdoor unit
22.1	Indoor unit capacity error
23.1	Connection prohibited (Series error)
5U.1	Indoor unit error
62.1	PCB model information error
62.3	EEPROM access error
62.8	EEPROM data corruption error
63.1	Inverter error
65.3	IPM error (Trip terminal L error)
71.1	Discharge temp. sensor error
72.1	Compressor temp. sensor error
73.2	Heat exchanger middle temp. sensor error
73.3	Heat exchanger liquid temp. sensor error
74.1	Outdoor temp. sensor error
75.1	Suction gas temp. sensor error
76.1	Valve sensor error
76.2	
77.1	Heat sink temp. sensor error
84.1	Current sensor 1 error (stoppage permanently)
86.1	Discharge pressure sensor error
86.4	High pressure switch 1 error
94.1	Trip detection
95.1	Compressor motor control error (stoppage permanently)
97.3	Fan motor 1 error (Duty error)
98.3	Fan motor 2 error (Duty error)
99.1	4-way valve error
9A.1	Coil 1 (expansion valve 1) error
A1.1	Discharge temperature 1 error (stoppage permanently)
A3.1	Compressor 1 temperature error

OUTDOOR UNIT
AOEG30KBTA4

14-4. Pump down

⚠ WARNING

During the pump down operation, make sure that compressor is off before you remove the refrigerant pipe. Do not remove the connection pipe while the compressor is in operation with valve open. This may cause abnormal pressure in the refrigeration cycle that leads to breakage and even injury.

■ Pump down operation

When moving or discarding the air conditioner, in order to consider the environment and avoid the discharge of refrigerant to the atmosphere, pump down according to the following procedure.

1. Connect the pressure gauge to the charging port.

2. Change the DIP switch on the board (SET1-2) to ON.

   NOTE: Disconnect the power supply firmly on the breaker before changing the DIP switch settings.

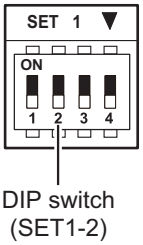

3. To start operation, push the PUMP DOWN switch (SW1) for 3 seconds or push the switch after the power has been on for 3 minutes.

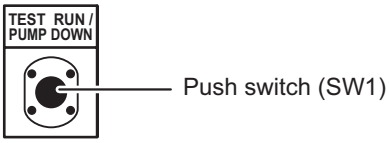

During pump down, the LED (POWER/MODE) blinks 3 times consecutively.

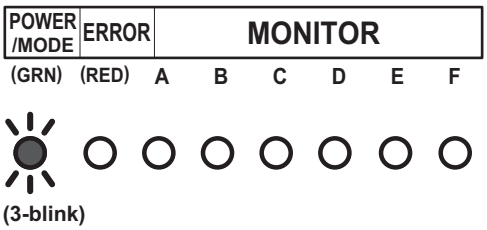

   NOTE: If the PUMP DOWN switch (SW1) is pushed while the compressor is in operation, the compressor stops and the operation restart after about 3 minutes.

4. Close the liquid pipe valve.

5. When the value between 7.3 psi and 0 psi (0.05 MPa to 0 MPa) is shown, close the gas pipe valve.

6. Stop the pump down operation by pushing the PUMP DOWN switch (SW1) for 3 seconds. The LED light as follows.

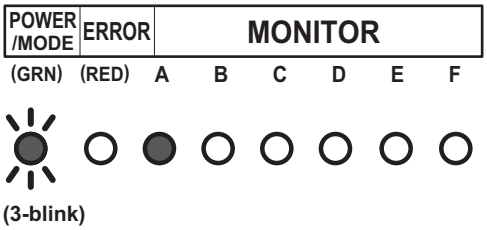

7. Disconnect the power supply or turn off the breaker.

NOTE:
- Even if the pump down operation is not stopped by pushing the switch as in step 6, the operation stops automatically after 15 minutes, and the LED light as follows.

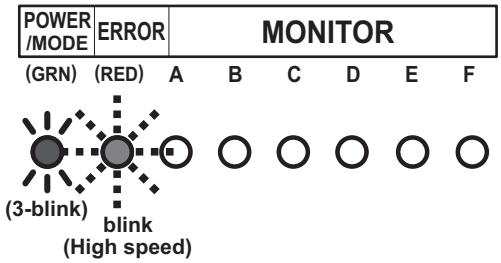

  - After completing the pump down operation, disconnect the power supply or turn off the breaker.
  - If the pump down operation still continues, open the liquid pipe valve. Then perform the procedure again starting from step 3.

- To cancel the pump down operation, push the PUMP DOWN switch (SW1) again. The indication of the LED returns to the original state which is before starting the pump down operation.
  (POWER/MODE LED: On)
- The pump down may stop before completion due to an error. To complete the pump down operation, correct the error, open the liquid pipe valve and then start from step 1 again. Otherwise, the refrigerant can be recovered from the service port.

15. Accessories

15-1. Model: AOEG30KBTA4

Part name	Exterior	Qty	Part name	Exterior	Qty
Installation manual		1	Adapter K 12.70 mm (1/2 in) to 9.52 mm (3/8 in)	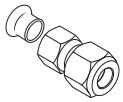	2
Drain pipe	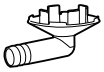	1			

OUTDOOR UNIT
AOEG30KBTA4

16. Outdoor unit installation precautions

NOTE: The information listed below are general precautions.
Some models also include items that do not apply.

16-1. Places where prohibited for use

- Places where there is a danger of combustible gas leakage.
- Places where sulfur gas, chlorine gas, acid, alkali, or other matter which effects equipment is generated.
- Places affected by heat radiation from other heat sources.
- Places where the air is stagnant.
- Places where machinery which generates high frequencies is used.
- Ocean beaches and other areas where there is a lot of salt.
- Inside of vehicles, ships, and other conveyances.
- Places where voltage fluctuations are large such as a factory.

16-2. Points to remember when installing

- The product shall be installed at a place which can withstand the weight and vibration of the outdoor unit.
- To allow maintenance after refrigerant pipe, drain piping, and the connection/installation of electric wiring, provide an maintenance space.
  Maintenance space is shown in "Installation space" on page 369.
- Be careful when installing the set at the following places.

Condition	Contents	Countermeasures (Reference)
When installed near adjacent houses.	Perform installation work so that operating sound does not disturb the neighbors.	1. Install a soundproof barrier. 2. Change the installation site.
When there is the possibility of strong wind.	• If the outdoor unit is exposed to strong wind, capacity may drop, frost may form during heating, and operation may be stopped by high pressure rise. In addition, when a very strong wind blows, the fan may be damaged. • When a very strong wind blows, there is the possibility of the outdoor unit being toppled over if held only by foundation bolts.	1. Install the outdoor unit with keeping a sufficient distance between the outlet side of the unit and a facing wall or fence. 2. Make the outlet direction and wind direction perpendicular. 3. Fasten the outdoor unit using toppling prevention hardware (purchased locally).
When snow accumulates.	If the outdoor unit is covered by accumulated snow, it may not be able to operate.	1. Make the foundation as high as possible. 2. Perform snow prevention work.
When installing the inverter type.	It may generate noise in TV sets, stereos and PCs.	The inverter type should be installed at a sufficient distance from these equipments.

Part 3. OUTDOOR UNIT (5 UNITS TYPE)

MULTI-SPLIT TYPE:

AOEG36KBTA5

1. Specifications

Type					Inverter heat pump
Model name					**AOEG36KBTA5**
Power source					230 V 50 Hz
Available voltage range					198—264V
Standard combination of indoor unit					Wall mounted ×5
Capacity	Cooling	Rated		kW	9.5
				Btu/h	32,400
		Min.—Max.		kW	3.0—11.0
				Btu/h	10,200—37,500
	Heating	Rated		kW	10.6
				Btu/h	36,200
		Min.—Max.		kW	3.5—12.0
				Btu/h	11,900—40,900
Input power	Cooling	Rated		kW	2.50
		Max.			3.45
	Heating	Rated			2.36
		Max.			3.25
Current	Cooling	Rated		A	11.1
	Heating	Rated			10.9
EER	Cooling			kW/kW	3.8
COP	Heating				4.5
Starting current				A	11.1
Maximum operating current *1				A	20.0
Fan	Type × Q'ty				Propeller × 1
	Airflow rate	Cooling		m^3/h	2,450
		Heating			2,900
	Motor output			W	49
Sound pressure level *2	Cooling			dB (A)	52
	Heating				55
Heat exchanger	Dimension (H x W x D)			mm	Main1: 840 × 873 × 18.19 Main2: 840 × 843 × 18.19 Main3: 840 × 784 × 18.19
	Fin pitch				Main 1: 1.45 Main 2: 1.45
	Rows × Stages				Main1: 1 × 40 Main2: 1 × 40 Main3: 1 × 40
	Pipe type (Material)				Copper tube
	Fin type (Material)				Aluminum
Compressor	Type × Quantity				DC twin rotary × 1
	Motor output			W	1,450
Refrigerant	Type (Global warming potential)				R32 (675)
	Charge			g	2,500
Refrigerant oil	Type				RmM68AF
	Amount			cm^3	800
Enclosure	Material				Steel sheet
	Color				Beige (Approximate color of Munsell 10YR 7.5/1.0 NN)
Dimensions (H x W x D)	Net			mm	884 × 820 × 315
	Gross				1,058 × 1,027 × 445
Weight	Net			kg	59
	Gross				69
Connection pipe	Size	Liquid		mm (in)	Ø6.35 (Ø1/4) × 5
		Gas			Ø9.52 (Ø3/8) × 3 + Ø12.7 (Ø1/2) × 2
	Method				Flare
	Pre-charge length (Total)			m	40
	Maximum length (Total)				75
	Maximum length (Each)				25
	Minimum length (Total)				15
	Minimum length (Each)				2.5
	Maximum height difference between outdoor unit and each indoor units.				15
	Maximum height difference between indoor units.				10
Drain hose	Material				PP
	Tip diameter			mm	Ø13.0 (I.D.), Ø16.0 to Ø16.8 (O.D.)
Operation range	Cooling			°C	-10 to 46
	Heating				-15 to 24

NOTES:

- Specifications are based on the following conditions:
  - Power source of specifications: 230 V
  - Pipe length: 5 m, Height difference: 0 m [Outdoor unit—Indoor unit]
  - Cooling: Indoor temperature of 27.0 °CDB/19.0 °CWB, and outdoor temperature of 35 °CDB/24.0 °CWB.
  - Heating: Indoor temperature of 20.0 °CDB/15.0 °CWB, and outdoor temperature of 7.0 °CDB/6.0 °CWB.
- *1: Maximum operating current is the total current of the indoor unit and the outdoor unit.
- *2: Sound pressure level
  - Measured values in manufacturer's anechoic chamber.
  - Because of the surrounding sound environment, the sound levels measured in actual installation conditions might be higher than the specified values here.
- For other combination, refer to the combination table.
- The protective function might work when using it outside the operation range.
- This data is based on EN 14511 standard.

OUTDOOR UNIT AOEG36KBTA5

Specifications for ErP Lot10				
Model name				**AOEG36KBTA5**
Energy efficiency class	Cooling			A^{+++}
	Heating (Average)			A^{++}
Pdesign	Cooling		kW	9.5 (35 °C)
	Heating (Average)			7.0 (-10 °C)
SEER	Cooling		kWh/kWh	8.50
SCOP	Heating (Average)			4.60
Annual energy consumption	QCE		kWh/a	391
	QHE (Average)			2,130
Sound power level	Cooling	HIGH	dB (A)	65
	Heating			68

OUTDOOR UNIT
AOEG36KBTA5

2. Dimensions

2-1. Model: AOEG36KBTA5

Unit: mm

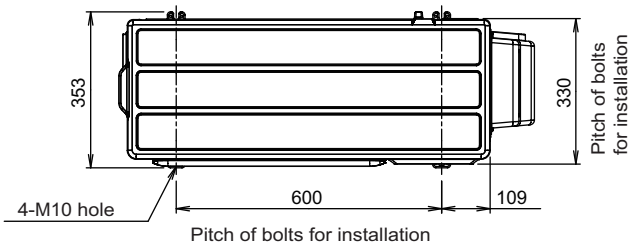

Top view

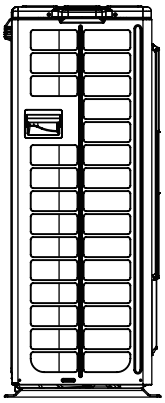

Side view

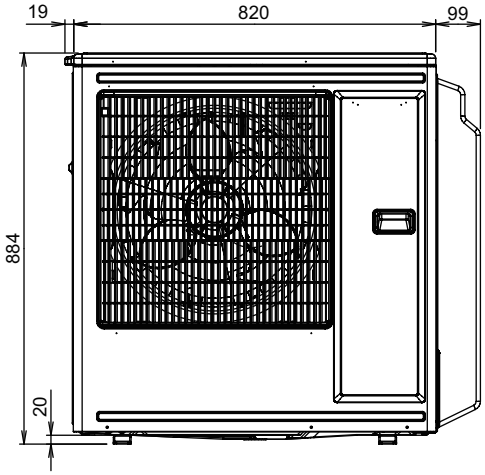

Front view

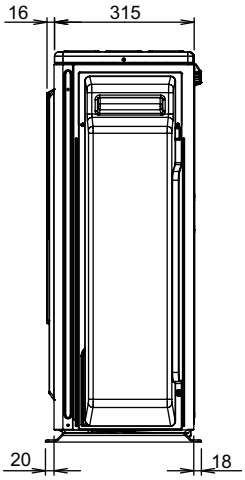

Side view

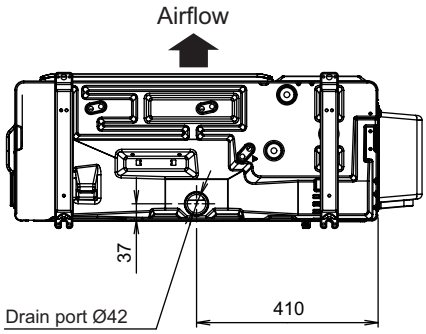

Bottom view

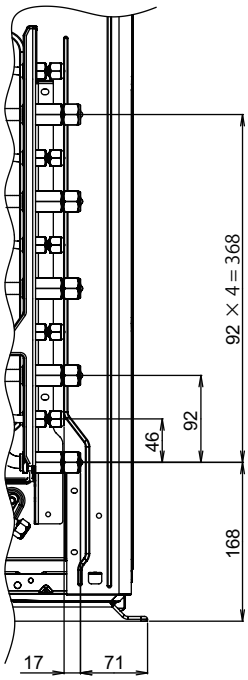

Side view (Valve part)

OUTDOOR UNIT AOEG36KBTA5

3. Installation space

3-1. Model: AOEG36KBTA5

■ Space requirement

Provide sufficient installation space for product safety.

⚠ CAUTION

Keep the space shown in the installation examples.
If the installation is not performed accordingly, it could cause a short circuit and result in a lack of operating performance.

OUTDOOR UNIT
AOEG36KBTA5

● Single outdoor unit installation

- **When the upper space is open:**

Unit: mm

Obstacles at rear only

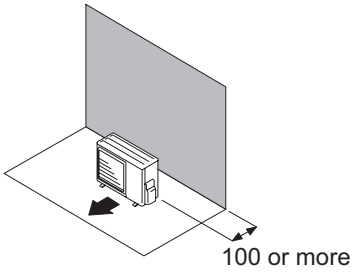

Obstacles at rear and sides

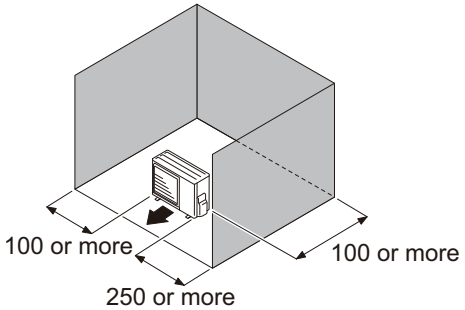

Obstacles at front

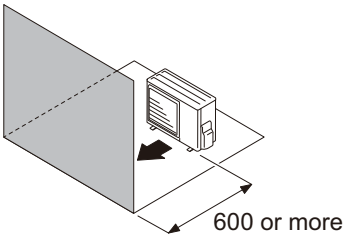

Obstacles at front and rear

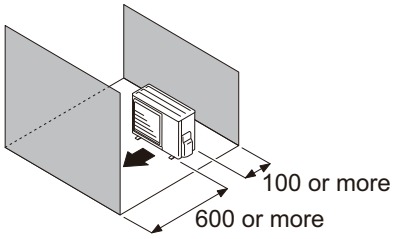

- **When an obstruction in the upper space:**

Unit: mm

Obstacles at rear and above

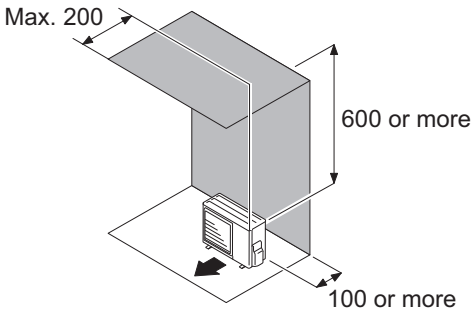

Obstacles at rear, sides, and above

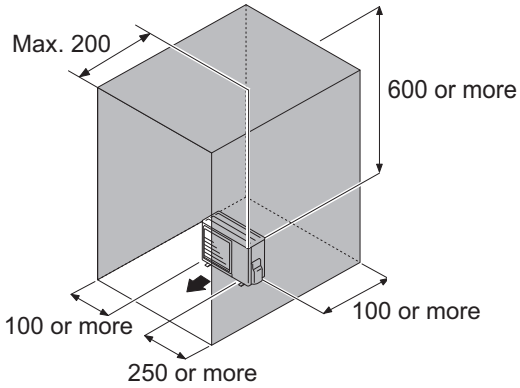

● Multiple outdoor unit installation

- Provide at least 250 mm of space between the outdoor units if multiple units are installed.
- When routing the piping from the side of an outdoor unit, provide space for piping.
- No more than 3 units must be installed side by side.
  When 4 units or more are arranged in a line, provide the space as shown in the following example "**When an obstruction in the upper space:**".

- **When the upper space is open:**

Unit: mm

Obstacles at rear only

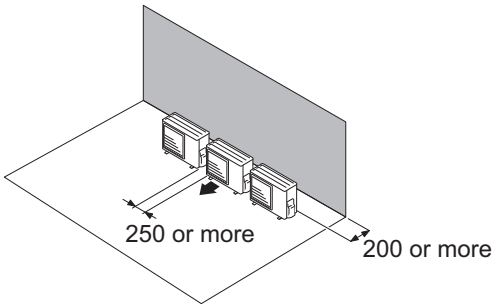

Obstacles at front only

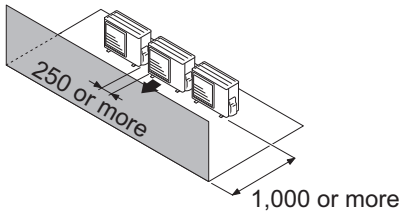

Obstacles at front and rear

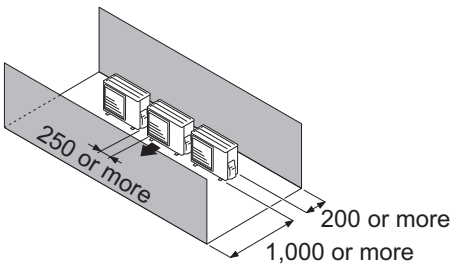

- **When an obstruction in the upper space:**

Unit: mm

Obstacles at rear and above.

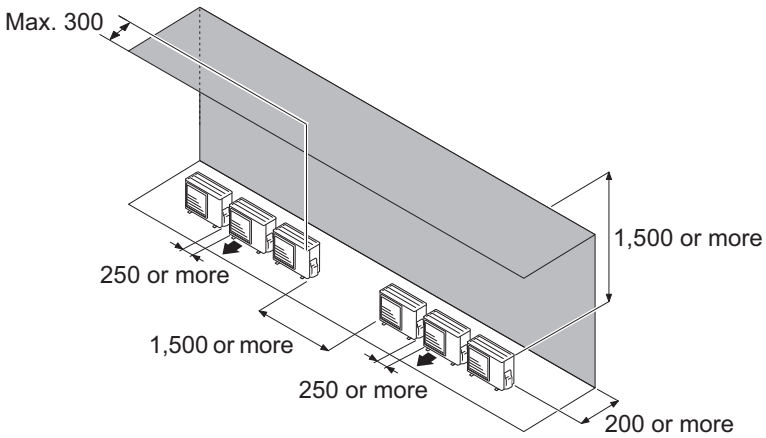

● Outdoor units installation in multi-row

Unit: mm

Single parallel unit arrangement

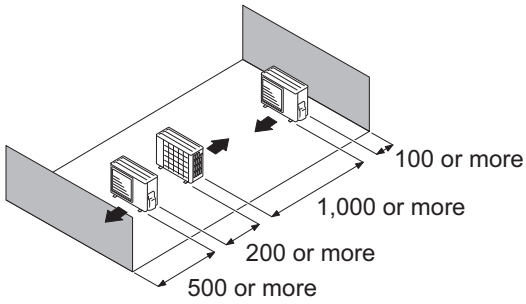

Multiple parallel unit arrangement

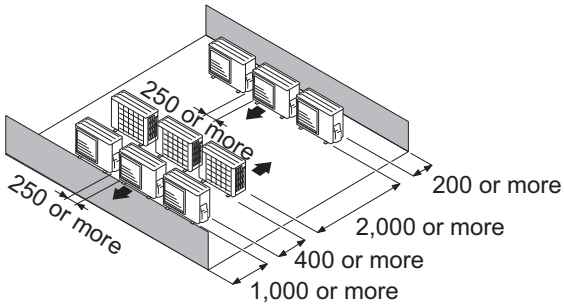

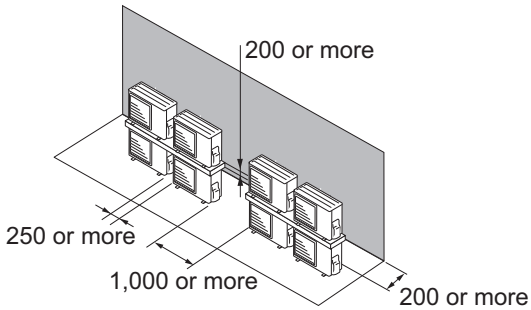

NOTES:

- If the space is larger than stated above, the condition will be the same as when there is no obstacle.
- When installing the outdoor unit, be sure to open the front and left side to obtain better operation efficiency.

⚠ CAUTION

- Do not install the outdoor unit in two-stage where the drain water could freeze. Otherwise the drainage from the upper unit may form ice and cause a malfunction of the lower unit.
- When the outdoor temperature is 0 °C or less, do not use the accessory drain pipe and drain cap. If the drain pipe and drain cap are used, the drain water in the pipe may freeze in extremely cold climate. (For reverse cycle model only.)
- In area with heavy snowfall, if the inlet and outlet of the outdoor unit is blocked with snow, it might become difficult to get warm, and it is likely to cause product malfunction. Construct a canopy and a pedestal, or place the unit on a high stand that is locally installed.

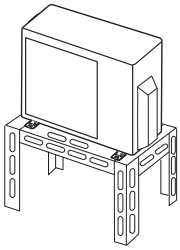

OUTDOOR UNIT AOEG36KBTA5

4. Refrigerant circuit

4-1. Model: AOEG36KBTA5

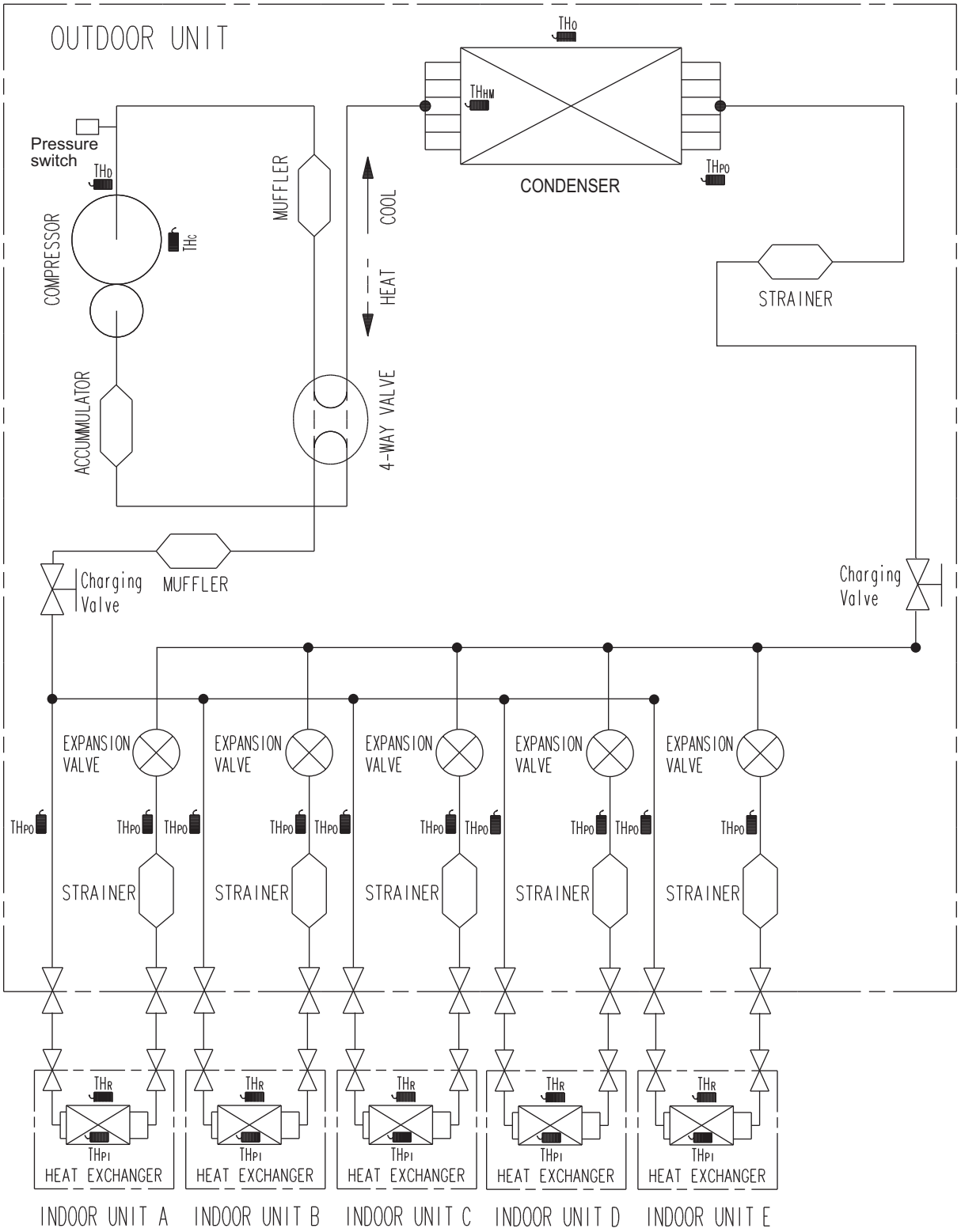

THD : THERMISTOR(DISCHARGE TEMP.)
THO : THERMISTOR(OUTDOOR TEMP.)
THPO : THERMISTOR(PIPE TEMP.)
THC : THERMISTOR(COMPRESSOR TEMP.)
THR : THERMISTOR(ROOM TEMP.)
THPI : THERMISTOR(PIPE TEMP.)
THHM : THERMISTOR(HEAT EXCHANGER MIDDLE TEMP.)

5. Wiring diagram

5-1. Model: AOEG36KBTA5

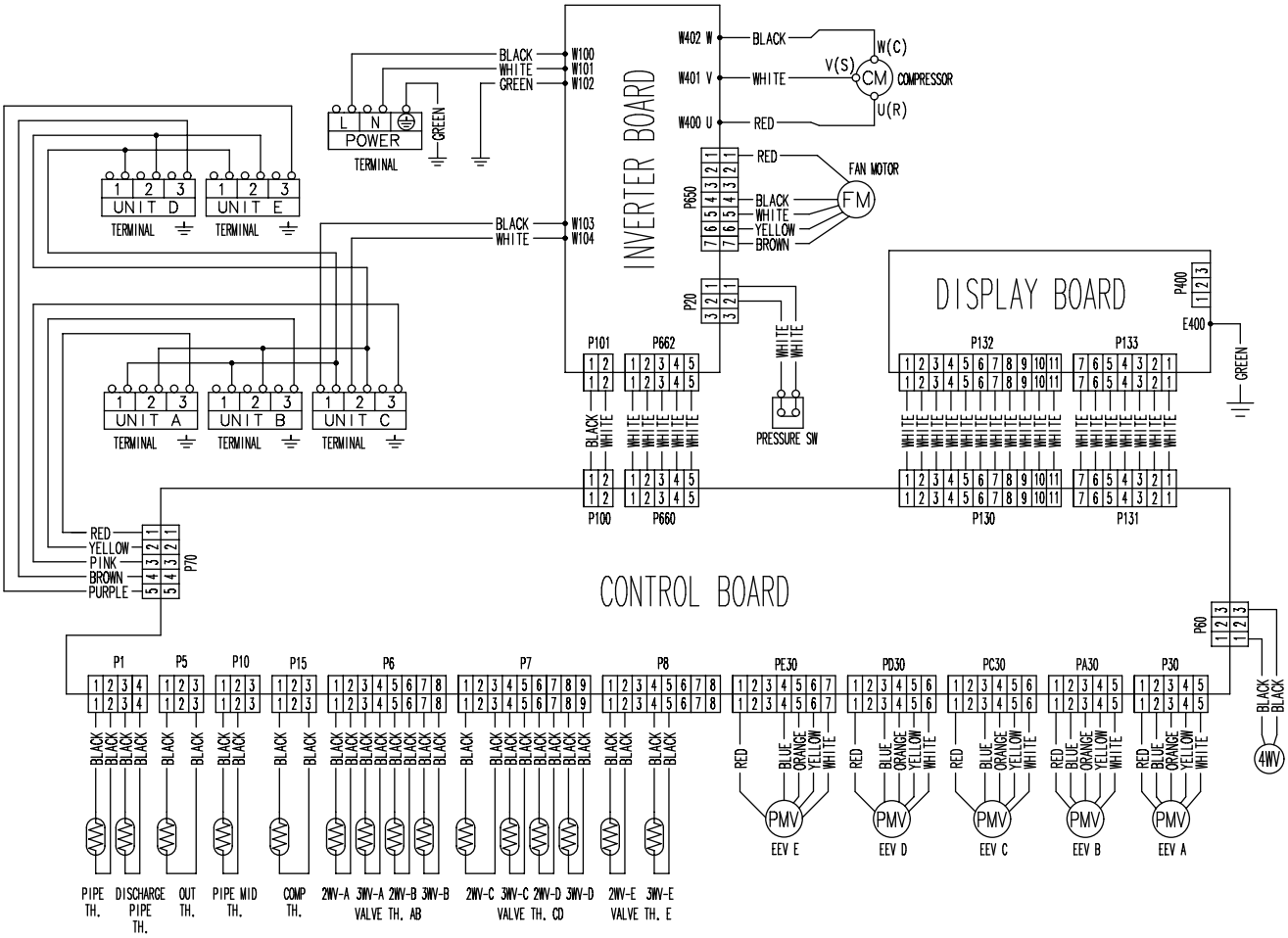

6. Capacity table

6-1. Combinations

■ Model: AOEG36KBTA5

● Cooling

Indoor unit combination (Wall-mounted KG/KM type only)

Combination of indoor unit						Rated capacity for each indoor unit (kW)					Total capacity (kW)			Input power (kW)			EER (W/W)	Seasonal data		
Room					Total	Room					Min.	Rated	Max.	Min.	Rated	Max.		Pdesign (kW)	SEER (kWh/kWh)	Energy efficiency class
1	2	3	4	5		1	2	3	4	5										
7	24	—	—	—	31	2.00	7.00	—	—	—	3.0	9.00	11.00	0.30	2.91	3.45	3.09	9.0	7.9	A++
9	22	—	—	—	31	2.50	6.00	—	—	—	3.0	8.50	11.00	0.30	2.67	3.45	3.18	8.5	7.9	A++
9	24	—	—	—	33	2.50	7.00	—	—	—	3.0	9.50	11.00	0.30	3.17	3.45	3.00	9.5	7.8	A++
12	22	—	—	—	34	3.50	6.00	—	—	—	3.0	9.50	11.00	0.30	3.17	3.45	3.00	9.5	7.8	A++
12	24	—	—	—	36	3.17	6.33	—	—	—	3.0	9.50	11.00	0.30	3.17	3.45	3.00	9.5	7.8	A++
14	22	—	—	—	36	3.69	5.81	—	—	—	3.0	9.50	11.00	0.30	3.17	3.45	3.00	9.5	7.8	A++
14	24	—	—	—	38	3.50	6.00	—	—	—	3.0	9.50	11.00	0.30	3.17	3.45	3.00	9.5	7.8	A++
18	18	—	—	—	36	4.75	4.75	—	—	—	3.0	9.50	11.00	0.30	3.17	3.45	3.00	9.5	7.8	A++
18	22	—	—	—	40	4.27	5.23	—	—	—	3.0	9.50	11.00	0.30	3.17	3.45	3.00	9.5	7.8	A++
18	24	—	—	—	42	4.07	5.43	—	—	—	3.0	9.50	11.00	0.30	3.17	3.45	3.00	9.5	7.8	A++
22	22	—	—	—	44	4.75	4.75	—	—	—	3.0	9.50	11.00	0.30	3.17	3.45	3.00	9.5	7.8	A++
22	24	—	—	—	46	4.54	4.96	—	—	—	3.0	9.50	11.00	0.30	3.17	3.45	3.00	9.5	7.8	A++
24	24	—	—	—	48	4.75	4.75	—	—	—	3.0	9.50	11.00	0.30	3.17	3.45	3.00	9.5	7.8	A++
7	7	14	—	—	28	2.00	2.00	4.00	—	—	3.0	8.00	10.00	0.30	2.26	2.88	3.54	8.0	8.2	A++
7	7	18	—	—	32	2.00	2.00	5.00	—	—	3.0	9.00	11.00	0.30	2.68	3.45	3.36	9.0	8.1	A++
7	7	22	—	—	36	1.85	1.85	5.80	—	—	3.0	9.50	11.00	0.30	2.91	3.45	3.27	9.5	8.0	A++
7	7	24	—	—	38	1.75	1.75	6.00	—	—	3.0	9.50	11.00	0.30	2.91	3.45	3.27	9.5	8.0	A++
7	9	12	—	—	28	2.00	2.50	3.50	—	—	3.0	8.00	10.00	0.30	2.26	2.88	3.54	8.0	8.2	A++
7	9	14	—	—	30	2.00	2.50	4.00	—	—	3.0	8.50	10.70	0.30	2.46	3.27	3.45	8.5	8.1	A++
7	9	18	—	—	34	2.00	2.50	5.00	—	—	3.0	9.50	11.00	0.30	2.91	3.45	3.27	9.5	8.0	A++
7	9	22	—	—	38	1.75	2.25	5.50	—	—	3.0	9.50	11.00	0.30	2.91	3.45	3.27	9.5	8.0	A++
7	9	24	—	—	40	1.66	2.14	5.70	—	—	3.0	9.50	11.00	0.30	2.91	3.45	3.27	9.5	8.0	A++
7	12	12	—	—	31	2.00	3.50	3.50	—	—	3.0	9.00	11.00	0.30	2.68	3.45	3.36	9.0	8.1	A++
7	12	14	—	—	33	2.00	3.50	4.00	—	—	3.0	9.50	11.00	0.30	2.91	3.45	3.27	9.5	8.0	A++
7	12	18	—	—	37	1.80	3.08	4.62	—	—	3.0	9.50	11.00	0.30	2.91	3.45	3.27	9.5	8.0	A++
7	12	22	—	—	41	1.62	2.78	5.10	—	—	3.0	9.50	11.00	0.30	2.91	3.45	3.27	9.5	8.0	A++
7	12	24	—	—	43	1.55	2.65	5.30	—	—	3.0	9.50	11.00	0.30	2.91	3.45	3.27	9.5	8.0	A++
7	14	14	—	—	35	1.90	3.80	3.80	—	—	3.0	9.50	11.00	0.30	2.91	3.45	3.27	9.5	8.0	A++
7	14	18	—	—	39	1.71	3.41	4.38	—	—	3.0	9.50	11.00	0.30	2.91	3.45	3.27	9.5	8.0	A++
7	14	22	—	—	43	1.55	3.09	4.86	—	—	3.0	9.50	11.00	0.30	2.91	3.45	3.27	9.5	8.0	A++
7	14	24	—	—	45	1.47	2.96	5.07	—	—	3.0	9.50	11.00	0.30	2.91	3.45	3.27	9.5	8.0	A++
7	18	18	—	—	43	1.54	3.98	3.98	—	—	3.0	9.50	11.00	0.30	2.91	3.45	3.27	9.5	8.0	A++
7	18	22	—	—	47	1.41	3.64	4.45	—	—	3.0	9.50	11.00	0.30	2.91	3.45	3.27	9.5	8.0	A++
7	18	24	—	—	49	1.36	3.49	4.65	—	—	3.0	9.50	11.00	0.30	2.91	3.45	3.27	9.5	8.0	A++
9	9	9	—	—	27	2.50	2.50	2.50	—	—	3.0	7.50	9.60	0.30	2.07	2.70	3.63	7.5	8.2	A++
9	9	12	—	—	30	2.50	2.50	3.50	—	—	3.0	8.50	10.70	0.30	2.46	3.27	3.45	8.5	8.1	A++
9	9	14	—	—	32	2.50	2.50	4.00	—	—	3.0	9.00	11.00	0.30	2.68	3.45	3.36	9.0	8.1	A++
9	9	18	—	—	36	2.38	2.38	4.74	—	—	3.0	9.50	11.00	0.30	2.91	3.45	3.27	9.5	8.0	A++
9	9	22	—	—	40	2.14	2.14	5.22	—	—	3.0	9.50	11.00	0.30	2.91	3.45	3.27	9.5	8.0	A++
9	9	24	—	—	42	2.04	2.04	5.42	—	—	3.0	9.50	11.00	0.30	2.91	3.45	3.27	9.5	8.0	A++
9	12	12	—	—	33	2.50	3.50	3.50	—	—	3.0	9.50	11.00	0.30	2.91	3.45	3.27	9.5	8.0	A++
9	12	14	—	—	35	2.44	3.26	3.80	—	—	3.0	9.50	11.00	0.30	2.91	3.45	3.27	9.5	8.0	A++
9	12	18	—	—	39	2.19	2.92	4.39	—	—	3.0	9.50	11.00	0.30	2.91	3.45	3.27	9.5	8.0	A++
9	12	22	—	—	43	1.99	2.65	4.86	—	—	3.0	9.50	11.00	0.30	2.91	3.45	3.27	9.5	8.0	A++
9	12	24	—	—	45	1.90	2.53	5.07	—	—	3.0	9.50	11.00	0.30	2.91	3.45	3.27	9.5	8.0	A++
9	14	14	—	—	37	2.32	3.59	3.59	—	—	3.0	9.50	11.00	0.30	2.91	3.45	3.27	9.5	8.0	A++
9	14	18	—	—	41	2.09	3.24	4.17	—	—	3.0	9.50	11.00	0.30	2.91	3.45	3.27	9.5	8.0	A++
9	14	22	—	—	45	1.90	2.96	4.64	—	—	3.0	9.50	11.00	0.30	2.91	3.45	3.27	9.5	8.0	A++
9	14	24	—	—	47	1.82	2.83	4.85	—	—	3.0	9.50	11.00	0.30	2.91	3.45	3.27	9.5	8.0	A++
9	18	18	—	—	45	1.90	3.80	3.80	—	—	3.0	9.50	11.00	0.30	2.91	3.45	3.27	9.5	8.0	A++
9	18	22	—	—	49	1.74	3.49	4.27	—	—	3.0	9.50	11.00	0.30	2.91	3.45	3.27	9.5	8.0	A++
9	18	24	—	—	51	1.68	3.35	4.47	—	—	3.0	9.50	11.00	0.30	2.91	3.45	3.27	9.5	8.0	A++
12	12	12	—	—	36	3.17	3.17	3.17	—	—	3.0	9.50	11.00	0.30	2.91	3.45	3.27	9.5	8.0	A++
12	12	14	—	—	38	3.00	3.00	3.50	—	—	3.0	9.50	11.00	0.30	2.91	3.45	3.27	9.5	8.0	A++
12	12	18	—	—	42	2.71	2.71	4.08	—	—	3.0	9.50	11.00	0.30	2.91	3.45	3.27	9.5	8.0	A++
12	12	22	—	—	46	2.48	2.48	4.54	—	—	3.0	9.50	11.00	0.30	2.91	3.45	3.27	9.5	8.0	A++
12	12	24	—	—	48	2.38	2.38	4.74	—	—	3.0	9.50	11.00	0.30	2.91	3.45	3.27	9.5	8.0	A++
12	14	14	—	—	40	2.84	3.33	3.33	—	—	3.0	9.50	11.00	0.30	2.91	3.45	3.27	9.5	8.0	A++
12	14	18	—	—	44	2.59	3.02	3.89	—	—	3.0	9.50	11.00	0.30	2.91	3.45	3.27	9.5	8.0	A++
12	14	22	—	—	48	2.38	2.77	4.35	—	—	3.0	9.50	11.00	0.30	2.91	3.45	3.27	9.5	8.0	A++
12	14	24	—	—	50	2.28	2.66	4.56	—	—	3.0	9.50	11.00	0.30	2.91	3.45	3.27	9.5	8.0	A++
12	18	18	—	—	48	2.38	3.56	3.56	—	—	3.0	9.50	11.00	0.30	2.91	3.45	3.27	9.5	8.0	A++
12	18	22	—	—	52	2.19	3.29	4.02	—	—	3.0	9.50	11.00	0.30	2.91	3.45	3.27	9.5	8.0	A++
12	18	24	—	—	54	2.11	3.17	4.22	—	—	3.0	9.50	11.00	0.30	2.91	3.45	3.27	9.5	8.0	A++
14	14	14	—	—	42	3.17	3.17	3.17	—	—	3.0	9.50	11.00	0.30	2.91	3.45	3.27	9.5	8.0	A++
14	14	18	—	—	46	2.89	2.89	3.72	—	—	3.0	9.50	11.00	0.30	2.91	3.45	3.27	9.5	8.0	A++
14	14	22	—	—	50	2.66	2.66	4.18	—	—	3.0	9.50	11.00	0.30	2.91	3.45	3.27	9.5	8.0	A++
14	14	24	—	—	52	2.56	2.56	4.38	—	—	3.0	9.50	11.00	0.30	2.91	3.45	3.27	9.5	8.0	A++
14	18	18	—	—	50	2.66	3.42	3.42	—	—	3.0	9.50	11.00	0.30	2.91	3.45	3.27	9.5	8.0	A++
18	18	18	—	—	54	3.17	3.17	3.17	—	—	3.0	9.50	11.00	0.30	2.91	3.45	3.27	9.5	8.0	A++
7	7	7	7	—	28	2.00	2.00	2.00	2.00	—	3.0	8.00	10.00	0.30	2.11	2.88	3.80	8.0	8.5	A+++

OUTDOOR UNIT AOEG36KBTA5

Combination of indoor unit						Rated capacity for each indoor unit (kW)					Total capacity (kW)			Input power (kW)			EER (W/W)	Seasonal data		
Room					Total	Room					Min.	Rated	Max.	Min.	Rated	Max.		Pdesign (kW)	SEER (kWh/kWh)	Energy efficiency class
1	2	3	4	5		1	2	3	4	5										
7	7	7	9	—	30	2.00	2.00	2.00	2.50	—	3.0	8.50	10.70	0.30	2.29	3.27	3.71	8.5	8.4	A++
7	7	7	12	—	33	2.00	2.00	2.00	3.50	—	3.0	9.50	11.00	0.30	2.69	3.45	3.53	9.5	8.3	A++
7	7	7	14	—	35	1.90	1.90	1.90	3.80	—	3.0	9.50	11.00	0.30	2.69	3.45	3.53	9.5	8.3	A++
7	7	7	18	—	39	1.71	1.71	1.71	4.37	—	3.0	9.50	11.00	0.30	2.69	3.45	3.53	9.5	8.3	A++
7	7	7	22	—	43	1.55	1.55	1.55	4.85	—	3.0	9.50	11.00	0.30	2.69	3.45	3.53	9.5	8.3	A++
7	7	7	24	—	45	1.48	1.48	1.48	5.06	—	3.0	9.50	11.00	0.30	2.69	3.45	3.53	9.5	8.3	A++
7	7	9	9	—	32	2.00	2.00	2.50	2.50	—	3.0	9.00	11.00	0.30	2.49	3.45	3.62	9.0	8.4	A++
7	7	9	12	—	35	1.90	1.90	2.44	3.26	—	3.0	9.50	11.00	0.30	2.69	3.45	3.53	9.5	8.3	A++
7	7	9	14	—	37	1.80	1.80	2.31	3.59	—	3.0	9.50	11.00	0.30	2.69	3.45	3.53	9.5	8.3	A++
7	7	9	18	—	41	1.62	1.62	2.09	4.17	—	3.0	9.50	11.00	0.30	2.69	3.45	3.53	9.5	8.3	A++
7	7	9	22	—	45	1.48	1.48	1.90	4.64	—	3.0	9.50	11.00	0.30	2.69	3.45	3.53	9.5	8.3	A++
7	7	9	24	—	47	1.41	1.41	1.82	4.86	—	3.0	9.50	11.00	0.30	2.69	3.45	3.53	9.5	8.3	A++
7	7	12	12	—	38	1.75	1.75	3.00	3.00	—	3.0	9.50	11.00	0.30	2.69	3.45	3.53	9.5	8.3	A++
7	7	12	14	—	40	1.66	1.66	2.85	3.33	—	3.0	9.50	11.00	0.30	2.69	3.45	3.53	9.5	8.3	A++
7	7	12	18	—	44	1.51	1.51	2.59	3.89	—	3.0	9.50	11.00	0.30	2.69	3.45	3.53	9.5	8.3	A++
7	7	12	22	—	48	1.39	1.39	2.38	4.34	—	3.0	9.50	11.00	0.30	2.69	3.45	3.53	9.5	8.3	A++
7	7	12	24	—	50	1.33	1.33	2.28	4.56	—	3.0	9.50	11.00	0.30	2.69	3.45	3.53	9.5	8.3	A++
7	7	14	14	—	42	1.58	1.58	3.17	3.17	—	3.0	9.50	11.00	0.30	2.69	3.45	3.53	9.5	8.3	A++
7	7	14	18	—	46	1.45	1.45	2.89	3.71	—	3.0	9.50	11.00	0.30	2.69	3.45	3.53	9.5	8.3	A++
7	7	14	22	—	50	1.33	1.33	2.66	4.18	—	3.0	9.50	11.00	0.30	2.69	3.45	3.53	9.5	8.3	A++
7	7	14	24	—	52	1.28	1.28	2.56	4.38	—	3.0	9.50	11.00	0.30	2.69	3.45	3.53	9.5	8.3	A++
7	7	18	18	—	50	1.33	1.33	3.42	3.42	—	3.0	9.50	11.00	0.30	2.69	3.45	3.53	9.5	8.3	A++
7	9	9	9	—	34	2.00	2.50	2.50	2.50	—	3.0	9.50	11.00	0.30	2.69	3.45	3.53	9.5	8.3	A++
7	9	9	12	—	37	1.80	2.31	2.31	3.08	—	3.0	9.50	11.00	0.30	2.69	3.45	3.53	9.5	8.3	A++
7	9	9	14	—	39	1.71	2.19	2.19	3.41	—	3.0	9.50	11.00	0.30	2.69	3.45	3.53	9.5	8.3	A++
7	9	9	18	—	43	1.54	1.99	1.99	3.98	—	3.0	9.50	11.00	0.30	2.69	3.45	3.53	9.5	8.3	A++
7	9	9	22	—	47	1.41	1.82	1.82	4.45	—	3.0	9.50	11.00	0.30	2.69	3.45	3.53	9.5	8.3	A++
7	9	9	24	—	49	1.36	1.74	1.74	4.66	—	3.0	9.50	11.00	0.30	2.69	3.45	3.53	9.5	8.3	A++
7	9	12	12	—	40	1.66	2.14	2.85	2.85	—	3.0	9.50	11.00	0.30	2.69	3.45	3.53	9.5	8.3	A++
7	9	12	14	—	42	1.58	2.04	2.71	3.17	—	3.0	9.50	11.00	0.30	2.69	3.45	3.53	9.5	8.3	A++
7	9	12	18	—	46	1.44	1.86	2.48	3.72	—	3.0	9.50	11.00	0.30	2.69	3.45	3.53	9.5	8.3	A++
7	9	12	22	—	50	1.33	1.71	2.28	4.18	—	3.0	9.50	11.00	0.30	2.69	3.45	3.53	9.5	8.3	A++
7	9	12	24	—	52	1.28	1.64	2.19	4.39	—	3.0	9.50	11.00	0.30	2.69	3.45	3.53	9.5	8.3	A++
7	9	14	14	—	44	1.51	1.95	3.02	3.02	—	3.0	9.50	11.00	0.30	2.69	3.45	3.53	9.5	8.3	A++
7	9	14	18	—	48	1.39	1.78	2.77	3.56	—	3.0	9.50	11.00	0.30	2.69	3.45	3.53	9.5	8.3	A++
7	9	14	22	—	52	1.28	1.64	2.56	4.02	—	3.0	9.50	11.00	0.30	2.69	3.45	3.53	9.5	8.3	A++
7	9	14	24	—	54	1.23	1.58	2.46	4.23	—	3.0	9.50	11.00	0.30	2.69	3.45	3.53	9.5	8.3	A++
7	9	18	18	—	52	1.28	1.64	3.29	3.29	—	3.0	9.50	11.00	0.30	2.69	3.45	3.53	9.5	8.3	A++
7	12	12	12	—	43	1.55	2.65	2.65	2.65	—	3.0	9.50	11.00	0.30	2.69	3.45	3.53	9.5	8.3	A++
7	12	12	14	—	45	1.48	2.53	2.53	2.96	—	3.0	9.50	11.00	0.30	2.69	3.45	3.53	9.5	8.3	A++
7	12	12	18	—	49	1.35	2.33	2.33	3.49	—	3.0	9.50	11.00	0.30	2.69	3.45	3.53	9.5	8.3	A++
7	12	14	14	—	47	1.41	2.43	2.83	2.83	—	3.0	9.50	11.00	0.30	2.69	3.45	3.53	9.5	8.3	A++
7	12	14	18	—	51	1.30	2.24	2.61	3.35	—	3.0	9.50	11.00	0.30	2.69	3.45	3.53	9.5	8.3	A++
7	14	14	14	—	49	1.37	2.71	2.71	2.71	—	3.0	9.50	11.00	0.30	2.69	3.45	3.53	9.5	8.3	A++
7	14	14	18	—	53	1.25	2.51	2.51	3.23	—	3.0	9.50	11.00	0.30	2.69	3.45	3.53	9.5	8.3	A++
9	9	9	9	—	36	2.38	2.38	2.38	2.38	—	3.0	9.50	11.00	0.30	2.69	3.45	3.53	9.5	8.3	A++
9	9	9	12	—	39	2.19	2.19	2.19	2.93	—	3.0	9.50	11.00	0.30	2.69	3.45	3.53	9.5	8.3	A++
9	9	9	14	—	41	2.09	2.09	2.09	3.23	—	3.0	9.50	11.00	0.30	2.69	3.45	3.53	9.5	8.3	A++
9	9	9	18	—	45	1.90	1.90	1.90	3.80	—	3.0	9.50	11.00	0.30	2.69	3.45	3.53	9.5	8.3	A++
9	9	9	22	—	49	1.74	1.74	1.74	4.28	—	3.0	9.50	11.00	0.30	2.69	3.45	3.53	9.5	8.3	A++
9	9	9	24	—	51	1.68	1.68	1.68	4.46	—	3.0	9.50	11.00	0.30	2.69	3.45	3.53	9.5	8.3	A++
9	9	12	12	—	42	2.04	2.04	2.71	2.71	—	3.0	9.50	11.00	0.30	2.69	3.45	3.53	9.5	8.3	A++
9	9	12	14	—	44	1.94	1.94	2.59	3.03	—	3.0	9.50	11.00	0.30	2.69	3.45	3.53	9.5	8.3	A++
9	9	12	18	—	48	1.78	1.78	2.38	3.56	—	3.0	9.50	11.00	0.30	2.69	3.45	3.53	9.5	8.3	A++
9	9	12	22	—	52	1.64	1.64	2.19	4.03	—	3.0	9.50	11.00	0.30	2.69	3.45	3.53	9.5	8.3	A++
9	9	12	24	—	54	1.58	1.58	2.11	4.23	—	3.0	9.50	11.00	0.30	2.69	3.45	3.53	9.5	8.3	A++
9	9	14	14	—	46	1.86	1.86	2.89	2.89	—	3.0	9.50	11.00	0.30	2.69	3.45	3.53	9.5	8.3	A++
9	9	14	18	—	50	1.71	1.71	2.66	3.42	—	3.0	9.50	11.00	0.30	2.69	3.45	3.53	9.5	8.3	A++
9	9	18	18	—	54	1.58	1.58	3.17	3.17	—	3.0	9.50	11.00	0.30	2.69	3.45	3.53	9.5	8.3	A++
9	12	12	12	—	45	1.91	2.53	2.53	2.53	—	3.0	9.50	11.00	0.30	2.69	3.45	3.53	9.5	8.3	A++
9	12	12	14	—	47	1.81	2.43	2.43	2.83	—	3.0	9.50	11.00	0.30	2.69	3.45	3.53	9.5	8.3	A++
9	12	12	18	—	51	1.67	2.24	2.24	3.35	—	3.0	9.50	11.00	0.30	2.69	3.45	3.53	9.5	8.3	A++
9	12	14	14	—	49	1.74	2.34	2.71	2.71	—	3.0	9.50	11.00	0.30	2.69	3.45	3.53	9.5	8.3	A++
9	12	14	18	—	53	1.61	2.15	2.51	3.23	—	3.0	9.50	11.00	0.30	2.69	3.45	3.53	9.5	8.3	A++
9	14	14	14	—	51	1.67	2.61	2.61	2.61	—	3.0	9.50	11.00	0.30	2.69	3.45	3.53	9.5	8.3	A++
12	12	12	12	—	48	2.38	2.38	2.38	2.38	—	3.0	9.50	11.00	0.30	2.69	3.45	3.53	9.5	8.3	A++
12	12	12	14	—	50	2.28	2.28	2.28	2.66	—	3.0	9.50	11.00	0.30	2.69	3.45	3.53	9.5	8.3	A++
12	12	12	18	—	54	2.11	2.11	2.11	3.17	—	3.0	9.50	11.00	0.30	2.69	3.45	3.53	9.5	8.3	A++
12	12	14	14	—	52	2.19	2.19	2.56	2.56	—	3.0	9.50	11.00	0.30	2.69	3.45	3.53	9.5	8.3	A++
12	14	14	14	—	54	2.12	2.46	2.46	2.46	—	3.0	9.50	11.00	0.30	2.69	3.45	3.53	9.5	8.3	A++
7	7	7	7	7	35	1.90	1.90	1.90	1.90	1.90	3.0	9.50	11.00	0.30	2.50	3.45	3.80	9.5	8.5	A+++
7	7	7	7	9	37	1.80	1.80	1.80	1.80	2.30	3.0	9.50	11.00	0.30	2.50	3.45	3.80	9.5	8.5	A+++
7	7	7	7	12	40	1.66	1.66	1.66	1.66	2.86	3.0	9.50	11.00	0.30	2.50	3.45	3.80	9.5	8.5	A+++
7	7	7	7	14	42	1.58	1.58	1.58	1.58	3.18	3.0	9.50	11.00	0.30	2.50	3.45	3.80	9.5	8.5	A+++
7	7	7	7	18	46	1.45	1.45	1.45	1.45	3.70	3.0	9.50	11.00	0.30	2.50	3.45	3.80	9.5	8.5	A+++
7	7	7	7	22*	50	1.33	1.33	1.33	1.33	4.18	3.0	9.50	11.00	0.30	2.50	3.45	3.80	9.5	8.5	A+++
7	7	7	7	24	52	1.28	1.28	1.28	1.28	4.38	3.0	9.50	11.00	0.30	2.50	3.45	3.80	9.5	8.5	A+++
7	7	7	9	9	39	1.70	1.70	1.70	2.20	2.20	3.0	9.50	11.00	0.30	2.50	3.45	3.80	9.5	8.5	A+++
7	7	7	9	12	42	1.58	1.58	1.58	2.04	2.72	3.0	9.50	11.00	0.30	2.50	3.45	3.80	9.5	8.5	A+++
7	7	7	9	14	44	1.51	1.51	1.51	1.94	3.03	3.0	9.50	11.00	0.30	2.50	3.45	3.80	9.5	8.5	A+++
7	7	7	9	18	48	1.39	1.39	1.39	1.77	3.56	3.0	9.50	11.00	0.30	2.50	3.45	3.80	9.5	8.5	A+++
7	7	7	9	22*	52	1.28	1.28	1.28	1.64	4.02	3.0	9.50	11.00	0.30	2.50	3.45	3.80	9.5	8.5	A+++
7	7	7	9	24	54	1.23	1.23	1.23	1.58	4.23	3.0	9.50	11.00	0.30	2.50	3.45	3.80	9.5	8.5	A+++
7	7	7	12	12	45	1.48	1.48	1.48	2.53	2.53	3.0	9.50	11.00	0.30	2.50	3.45	3.80	9.5	8.5	A+++
7	7	7	12	14	47	1.41	1.41	1.41	2.43	2.84	3.0	9.50	11.00	0.30	2.50	3.45	3.80	9.5	8.5	A+++
7	7	7	12	18	51	1.30	1.30	1.30	2.24	3.36	3.0	9.50	11.00	0.30	2.50	3.45	3.80	9.5	8.5	A+++
7	7	7	14	14	49	1.36	1.36	1.36	2.71	2.71	3.0	9.50	11.00	0.30	2.50	3.45	3.80	9.5	8.5	A+++
7	7	7	14	18	53	1.25	1.25	1.25	2.51	3.24	3.0	9.50	11.00	0.30	2.50	3.45	3.80	9.5	8.5	A+++
7	7	9	9	9	41	1.63	1.63	2.08	2.08	2.08	3.0	9.50	11.00	0.30	2.50	3.45	3.80	9.5	8.5	A+++

OUTDOOR UNIT AOEG36KBTA5

Combination of indoor unit						Rated capacity for each indoor unit (kW)					Total capacity (kW)			Input power (kW)			EER (W/W)	Seasonal data		
Room					Total	Room					Min.	Rated	Max.	Min.	Rated	Max.		Pdesign (kW)	SEER (kWh/kWh)	Energy efficiency class
1	2	3	4	5		1	2	3	4	5										
7	7	9	9	12	44	1.51	1.51	1.94	1.94	2.60	3.0	9.50	11.00	0.30	2.50	3.45	3.80	9.5	8.5	A+++
7	7	9	9	14	46	1.45	1.45	1.86	1.86	2.88	3.0	9.50	11.00	0.30	2.50	3.45	3.80	9.5	8.5	A+++
7	7	9	9	18	50	1.33	1.33	1.71	1.71	3.42	3.0	9.50	11.00	0.30	2.50	3.45	3.80	9.5	8.5	A+++
7	7	9	9	22*	54	1.23	1.23	1.58	1.58	3.88	3.0	9.50	11.00	0.30	2.50	3.45	3.80	9.5	8.5	A+++
7	7	9	12	12	47	1.41	1.41	1.82	2.43	2.43	3.0	9.50	11.00	0.30	2.50	3.45	3.80	9.5	8.5	A+++
7	7	9	12	14	49	1.36	1.36	1.74	2.33	2.71	3.0	9.50	11.00	0.30	2.50	3.45	3.80	9.5	8.5	A+++
7	7	9	12	18	53	1.25	1.25	1.61	2.15	3.24	3.0	9.50	11.00	0.30	2.50	3.45	3.80	9.5	8.5	A+++
7	7	9	14	14	51	1.30	1.30	1.68	2.61	2.61	3.0	9.50	11.00	0.30	2.50	3.45	3.80	9.5	8.5	A+++
7	7	12	12	12	50	1.33	1.33	2.28	2.28	2.28	3.0	9.50	11.00	0.30	2.50	3.45	3.80	9.5	8.5	A+++
7	7	12	12	14	52	1.28	1.28	2.19	2.19	2.56	3.0	9.50	11.00	0.30	2.50	3.45	3.80	9.5	8.5	A+++
7	7	12	14	14	54	1.23	1.23	2.12	2.46	2.46	3.0	9.50	11.00	0.30	2.50	3.45	3.80	9.5	8.5	A+++
7	9	9	9	9	43	1.54	1.99	1.99	1.99	1.99	3.0	9.50	11.00	0.30	2.50	3.45	3.80	9.5	8.5	A+++
7	9	9	9	12	46	1.44	1.86	1.86	1.86	2.48	3.0	9.50	11.00	0.30	2.50	3.45	3.80	9.5	8.5	A+++
7	9	9	9	14	48	1.39	1.78	1.78	1.78	2.77	3.0	9.50	11.00	0.30	2.50	3.45	3.80	9.5	8.5	A+++
7	9	9	9	18	52	1.28	1.64	1.64	1.64	3.30	3.0	9.50	11.00	0.30	2.50	3.45	3.80	9.5	8.5	A+++
7	9	9	12	12	49	1.36	1.74	1.74	2.33	2.33	3.0	9.50	11.00	0.30	2.50	3.45	3.80	9.5	8.5	A+++
7	9	9	12	14	51	1.29	1.68	1.68	2.24	2.61	3.0	9.50	11.00	0.30	2.50	3.45	3.80	9.5	8.5	A+++
7	9	9	14	14	53	1.26	1.61	1.61	2.51	2.51	3.0	9.50	11.00	0.30	2.50	3.45	3.80	9.5	8.5	A+++
7	9	12	12	12	52	1.28	1.65	2.19	2.19	2.19	3.0	9.50	11.00	0.30	2.50	3.45	3.80	9.5	8.5	A+++
7	9	12	12	14	54	1.23	1.58	2.11	2.11	2.47	3.0	9.50	11.00	0.30	2.50	3.45	3.80	9.5	8.5	A+++
9	9	9	9	9	45	1.90	1.90	1.90	1.90	1.90	3.0	9.50	11.00	0.30	2.50	3.45	3.80	9.5	8.5	A+++
9	9	9	9	12	48	1.78	1.78	1.78	1.78	2.38	3.0	9.50	11.00	0.30	2.50	3.45	3.80	9.5	8.5	A+++
9	9	9	9	14	50	1.71	1.71	1.71	1.71	2.66	3.0	9.50	11.00	0.30	2.50	3.45	3.80	9.5	8.5	A+++
9	9	9	9	18	54	1.58	1.58	1.58	1.58	3.18	3.0	9.50	11.00	0.30	2.50	3.45	3.80	9.5	8.5	A+++
9	9	9	12	12	51	1.68	1.68	1.68	2.23	2.23	3.0	9.50	11.00	0.30	2.50	3.45	3.80	9.5	8.5	A+++
9	9	9	12	14	53	1.61	1.61	1.61	2.15	2.52	3.0	9.50	11.00	0.30	2.50	3.45	3.80	9.5	8.5	A+++
9	9	12	12	12	54	1.57	1.57	2.12	2.12	2.12	3.0	9.50	11.00	0.30	2.50	3.45	3.80	9.5	8.5	A+++

Indoor unit combination (All models other than wall-mounted type KG/KM models)

Combination of indoor unit						Rated capacity for each indoor unit (kW)					Total capacity (kW)			Input power (kW)			EER (W/W)	Seasonal data		
Room					Total	Room					Min.	Rated	Max.	Min.	Rated	Max.		Pdesign (kW)	SEER (kWh/kWh)	Energy efficiency class
1	2	3	4	5		1	2	3	4	5										
5	22	—	—	—	27	1.50	6.00	—	—	—	3.0	7.50	9.6	0.3	1.70	2.84	4.42	7.5	6.1	A++
5	24	—	—	—	29	1.50	7.00	—	—	—	3.0	8.50	10.3	0.3	2.19	3.13	3.88	8.5	6.0	A+
7	24	—	—	—	31	2.00	7.00	—	—	—	3.0	9.00	11.0	0.3	2.92	3.46	3.07	9.0	6.0	A+
9	22	—	—	—	31	2.50	6.00	—	—	—	3.0	8.50	11.0	0.3	2.68	3.46	3.16	8.5	6.0	A+
9	24	—	—	—	33	2.50	7.00	—	—	—	3.0	9.50	11.0	0.3	3.18	3.46	2.99	9.5	6.0	A+
12	22	—	—	—	34	3.50	6.00	—	—	—	3.0	9.50	11.0	0.3	3.18	3.46	2.99	9.5	6.0	A+
12	24	—	—	—	36	3.17	6.33	—	—	—	3.0	9.50	11.0	0.3	3.18	3.46	2.99	9.5	6.0	A+
14	22	—	—	—	36	3.69	5.81	—	—	—	3.0	9.50	11.0	0.3	3.18	3.46	2.99	9.5	6.0	A+
14	24	—	—	—	38	3.50	6.00	—	—	—	3.0	9.50	11.0	0.3	3.18	3.46	2.99	9.5	6.0	A+
18	18	—	—	—	36	4.75	4.75	—	—	—	3.0	9.50	11.0	0.3	3.18	3.46	2.99	9.5	6.0	A+
18	22	—	—	—	40	4.28	5.23	—	—	—	3.0	9.50	11.0	0.3	3.18	3.46	2.99	9.5	6.0	A+
18	24	—	—	—	42	4.07	5.43	—	—	—	3.0	9.50	11.0	0.3	3.18	3.46	2.99	9.5	6.0	A+
22	22	—	—	—	44	4.75	4.75	—	—	—	3.0	9.50	11.0	0.3	3.18	3.46	2.99	9.5	6.0	A+
22	24	—	—	—	46	4.54	4.96	—	—	—	3.0	9.50	11.0	0.3	3.18	3.46	2.99	9.5	6.0	A+
24	24	—	—	—	48	4.75	4.75	—	—	—	3.0	9.50	11.0	0.3	3.18	3.46	2.99	9.5	6.0	A+
5	5	18	—	—	28	1.43	1.43	5.14	—	—	3.0	8.00	9.7	0.3	2.36	2.98	3.38	8.0	6.3	A++
5	5	22	—	—	32	1.41	1.41	6.19	—	—	3.0	9.00	11.0	0.3	2.69	3.46	3.34	9.0	6.2	A++
5	5	24	—	—	34	1.40	1.40	6.71	—	—	3.0	9.50	11.0	0.3	2.92	3.46	3.25	9.5	6.1	A++
5	7	18	—	—	30	1.42	1.98	5.10	—	—	3.0	8.50	10.4	0.3	2.61	3.28	3.25	8.5	6.2	A++
5	7	22	—	—	34	1.40	1.96	6.15	—	—	3.0	9.50	11.0	0.3	2.92	3.46	3.25	9.5	6.1	A++
5	7	24	—	—	36	1.32	1.85	6.33	—	—	3.0	9.50	11.0	0.3	2.92	3.46	3.25	9.5	6.1	A++
5	9	14	—	—	28	1.43	2.57	4.00	—	—	3.0	8.00	10.0	0.3	2.36	2.98	3.38	8.0	6.3	A++
5	9	18	—	—	32	1.41	2.53	5.06	—	—	3.0	9.00	11.0	0.3	2.69	3.46	3.34	9.0	6.2	A++
5	9	22	—	—	36	1.32	2.38	5.81	—	—	3.0	9.50	11.0	0.3	2.92	3.46	3.25	9.5	6.1	A++
5	9	24	—	—	38	1.25	2.25	6.00	—	—	3.0	9.50	11.0	0.3	2.92	3.46	3.25	9.5	6.1	A++
5	12	12	—	—	29	1.38	3.31	3.31	—	—	3.0	8.00	10.4	0.3	2.47	3.13	3.23	8.5	6.2	A++
5	12	14	—	—	31	1.45	3.48	4.06	—	—	3.0	9.00	11.0	0.3	2.69	3.46	3.34	9.0	6.2	A++
5	12	18	—	—	35	1.36	3.26	4.89	—	—	3.0	9.50	11.0	0.3	2.92	3.46	3.25	9.5	6.1	A++
5	12	22	—	—	39	1.22	2.92	5.36	—	—	3.0	9.50	11.0	0.3	2.92	3.46	3.25	9.5	6.1	A++
5	12	24	—	—	41	1.16	2.78	5.56	—	—	3.0	9.50	11.0	0.3	2.92	3.46	3.25	9.5	6.1	A++
5	14	14	—	—	33	1.44	4.03	4.03	—	—	3.0	9.50	11.0	0.3	2.92	3.46	3.25	9.5	6.1	A++
5	14	18	—	—	37	1.28	3.59	4.62	—	—	3.0	9.50	11.0	0.3	2.92	3.46	3.25	9.5	6.1	A++
5	14	22	—	—	41	1.16	3.24	5.10	—	—	3.0	9.50	11.0	0.3	2.92	3.46	3.25	9.5	6.1	A++
5	14	24	—	—	43	1.10	3.09	5.30	—	—	3.0	9.50	11.0	0.3	2.92	3.46	3.25	9.5	6.1	A++
5	18	18	—	—	41	1.16	4.17	4.17	—	—	3.0	9.50	11.0	0.3	2.92	3.46	3.25	9.5	6.1	A++
5	18	22	—	—	45	1.06	3.80	4.64	—	—	3.0	9.50	11.0	0.3	2.92	3.46	3.25	9.5	6.1	A++
5	18	24	—	—	47	1.01	3.64	4.85	—	—	3.0	9.50	11.0	0.3	2.92	3.46	3.25	9.5	6.1	A++
5	22	22	—	—	49	0.97	4.27	4.27	—	—	3.0	9.50	11.0	0.3	2.92	3.46	3.25	9.5	6.1	A++
5	22	24	—	—	51	0.93	4.10	4.47	—	—	3.0	9.50	11.0	0.3	2.92	3.46	3.25	9.5	6.1	A++
5	24	24	—	—	53	0.90	4.30	4.30	—	—	3.0	9.50	11.0	0.3	2.92	3.46	3.25	9.5	6.1	A++
7	7	14	—	—	28	2.00	2.00	4.00	—	—	3.0	8.00	10.0	0.3	2.36	2.98	3.38	8.0	6.3	A++
7	7	18	—	—	32	2.00	2.00	5.00	—	—	3.0	9.00	11.0	0.3	2.69	3.46	3.34	9.0	6.2	A++
7	7	22	—	—	36	1.85	1.85	5.81	—	—	3.0	9.50	11.0	0.3	2.92	3.46	3.25	9.5	6.1	A++
7	7	24	—	—	38	1.75	1.75	6.00	—	—	3.0	9.50	11.0	0.3	2.92	3.46	3.25	9.5	6.1	A++
7	9	12	—	—	28	2.00	2.50	3.50	—	—	3.0	8.00	10.0	0.3	2.36	2.98	3.38	8.0	6.3	A++
7	9	14	—	—	30	2.00	2.50	4.00	—	—	3.0	8.50	10.7	0.3	2.61	3.28	3.25	8.5	6.2	A++
7	9	18	—	—	34	2.00	2.50	5.00	—	—	3.0	9.50	11.0	0.3	2.92	3.46	3.25	9.5	6.1	A++
7	9	22	—	—	38	1.75	2.25	5.50	—	—	3.0	9.50	11.0	0.3	2.92	3.46	3.25	9.5	6.1	A++
7	9	24	—	—	40	1.66	2.14	5.70	—	—	3.0	9.50	11.0	0.3	2.92	3.46	3.25	9.5	6.1	A++
7	12	12	—	—	31	2.00	3.50	3.50	—	—	3.0	9.00	11.0	0.3	2.69	3.46	3.34	9.0	6.2	A++
7	12	14	—	—	33	2.00	3.50	4.00	—	—	3.0	9.50	11.0	0.3	2.92	3.46	3.25	9.5	6.1	A++
7	12	18	—	—	37	1.80	3.08	4.62	—	—	3.0	9.50	11.0	0.3	2.92	3.46	3.25	9.5	6.1	A++
7	12	22	—	—	41	1.62	2.78	5.10	—	—	3.0	9.50	11.0	0.3	2.92	3.46	3.25	9.5	6.1	A++
7	12	24	—	—	43	1.55	2.65	5.30	—	—	3.0	9.50	11.0	0.3	2.92	3.46	3.25	9.5	6.1	A++

Combination of indoor unit						Rated capacity for each indoor unit (kW)					Total capacity (kW)			Input power (kW)			EER (W/W)	Seasonal data		
Room					Total	Room					Min.	Rated	Max.	Min.	Rated	Max.		Pdesign (kW)	SEER (kWh/kWh)	Energy efficiency class
1	2	3	4	5		1	2	3	4	5										
7	14	14	—	—	35	1.90	3.80	3.80	—	—	3.0	9.50	11.0	0.3	2.92	3.46	3.25	9.5	6.1	A++
7	14	18	—	—	39	1.71	3.41	4.38	—	—	3.0	9.50	11.0	0.3	2.92	3.46	3.25	9.5	6.1	A++
7	14	22	—	—	43	1.55	3.09	4.86	—	—	3.0	9.50	11.0	0.3	2.92	3.46	3.25	9.5	6.1	A++
7	14	24	—	—	45	1.48	2.96	5.07	—	—	3.0	9.50	11.0	0.3	2.92	3.46	3.25	9.5	6.1	A++
7	18	18	—	—	43	1.55	3.98	3.98	—	—	3.0	9.50	11.0	0.3	2.92	3.46	3.25	9.5	6.1	A++
7	18	22	—	—	47	1.41	3.64	4.45	—	—	3.0	9.50	11.0	0.3	2.92	3.46	3.25	9.5	6.1	A++
7	18	24	—	—	49	1.36	3.49	4.65	—	—	3.0	9.50	11.0	0.3	2.92	3.46	3.25	9.5	6.1	A++
9	9	9	—	—	27	2.50	2.50	2.50	—	—	3.0	7.50	9.6	0.3	2.20	2.84	3.40	7.5	6.3	A++
9	9	12	—	—	30	2.50	2.50	3.50	—	—	3.0	8.50	10.7	0.3	2.61	3.28	3.25	8.5	6.2	A++
9	9	14	—	—	32	2.50	2.50	4.00	—	—	3.0	9.00	11.0	0.3	2.69	3.46	3.34	9.0	6.2	A++
9	9	18	—	—	36	2.38	2.38	4.75	—	—	3.0	9.50	11.0	0.3	2.92	3.46	3.25	9.5	6.1	A++
9	9	22	—	—	40	2.14	2.14	5.23	—	—	3.0	9.50	11.0	0.3	2.92	3.46	3.25	9.5	6.1	A++
9	9	24	—	—	42	2.04	2.04	5.43	—	—	3.0	9.50	11.0	0.3	2.92	3.46	3.25	9.5	6.1	A++
9	12	12	—	—	33	2.50	3.50	3.50	—	—	3.0	9.50	11.0	0.3	2.92	3.46	3.25	9.5	6.1	A++
9	12	14	—	—	35	2.44	3.26	3.80	—	—	3.0	9.50	11.0	0.3	2.92	3.46	3.25	9.5	6.1	A++
9	12	18	—	—	39	2.19	2.92	4.38	—	—	3.0	9.50	11.0	0.3	2.92	3.46	3.25	9.5	6.1	A++
9	12	22	—	—	43	1.99	2.65	4.86	—	—	3.0	9.50	11.0	0.3	2.92	3.46	3.25	9.5	6.1	A++
9	12	24	—	—	45	1.90	2.53	5.07	—	—	3.0	9.50	11.0	0.3	2.92	3.46	3.25	9.5	6.1	A++
9	14	14	—	—	37	2.31	3.59	3.59	—	—	3.0	9.50	11.0	0.3	2.92	3.46	3.25	9.5	6.1	A++
9	14	18	—	—	41	2.09	3.24	4.17	—	—	3.0	9.50	11.0	0.3	2.92	3.46	3.25	9.5	6.1	A++
9	14	22	—	—	45	1.90	2.96	4.64	—	—	3.0	9.50	11.0	0.3	2.92	3.46	3.25	9.5	6.1	A++
9	14	24	—	—	47	1.82	2.83	4.85	—	—	3.0	9.50	11.0	0.3	2.92	3.46	3.25	9.5	6.1	A++
9	18	18	—	—	45	1.90	3.80	3.80	—	—	3.0	9.50	11.0	0.3	2.92	3.46	3.25	9.5	6.1	A++
9	18	22	—	—	49	1.74	3.49	4.27	—	—	3.0	9.50	11.0	0.3	2.92	3.46	3.25	9.5	6.1	A++
9	18	24	—	—	51	1.68	3.35	4.47	—	—	3.0	9.50	11.0	0.3	2.92	3.46	3.25	9.5	6.1	A++
12	12	12	—	—	36	3.17	3.17	3.17	—	—	3.0	9.50	11.0	0.3	2.92	3.46	3.25	9.5	6.1	A++
12	12	14	—	—	38	3.00	3.00	3.50	—	—	3.0	9.50	11.0	0.3	2.92	3.46	3.25	9.5	6.1	A++
12	12	18	—	—	42	2.71	2.71	4.07	—	—	3.0	9.50	11.0	0.3	2.92	3.46	3.25	9.5	6.1	A++
12	12	22	—	—	46	2.48	2.48	4.54	—	—	3.0	9.50	11.0	0.3	2.92	3.46	3.25	9.5	6.1	A++
12	12	24	—	—	48	2.38	2.38	4.75	—	—	3.0	9.50	11.0	0.3	2.92	3.46	3.25	9.5	6.1	A++
12	14	14	—	—	40	2.85	3.33	3.33	—	—	3.0	9.50	11.0	0.3	2.92	3.46	3.25	9.5	6.1	A++
12	14	18	—	—	44	2.59	3.02	3.89	—	—	3.0	9.50	11.0	0.3	2.92	3.46	3.25	9.5	6.1	A++
12	14	22	—	—	48	2.38	2.77	4.35	—	—	3.0	9.50	11.0	0.3	2.92	3.46	3.25	9.5	6.1	A++
12	14	24	—	—	50	2.28	2.66	4.56	—	—	3.0	9.50	11.0	0.3	2.92	3.46	3.25	9.5	6.1	A++
12	18	18	—	—	48	2.38	3.56	3.56	—	—	3.0	9.50	11.0	0.3	2.92	3.46	3.25	9.5	6.1	A++
12	18	22	—	—	52	2.19	3.29	4.02	—	—	3.0	9.50	11.0	0.3	2.92	3.46	3.25	9.5	6.1	A++
12	18	24	—	—	54	2.11	3.17	4.22	—	—	3.0	9.50	11.0	0.3	2.92	3.46	3.25	9.5	6.1	A++
14	14	14	—	—	42	3.17	3.17	3.17	—	—	3.0	9.50	11.0	0.3	2.92	3.46	3.25	9.5	6.1	A++
14	14	18	—	—	46	2.89	2.89	3.72	—	—	3.0	9.50	11.0	0.3	2.92	3.46	3.25	9.5	6.1	A++
14	14	22	—	—	50	2.66	2.66	4.18	—	—	3.0	9.50	11.0	0.3	2.92	3.46	3.25	9.5	6.1	A++
14	14	24	—	—	52	2.56	2.56	4.38	—	—	3.0	9.50	11.0	0.3	2.92	3.46	3.25	9.5	6.1	A++
14	18	18	—	—	50	2.66	3.42	3.42	—	—	3.0	9.50	11.0	0.3	2.92	3.46	3.25	9.5	6.1	A++
18	18	18	—	—	54	3.17	3.17	3.17	—	—	3.0	9.50	11.0	0.3	2.92	3.46	3.25	9.5	6.1	A++
5	5	5	12	—	27	1.39	1.39	1.39	3.33	—	3.0	7.50	9.6	0.3	2.11	2.84	3.55	8.0	6.5	A++
5	5	5	14	—	29	1.38	1.38	1.38	3.86	—	3.0	8.00	10.4	0.3	2.31	3.13	3.46	8.5	6.4	A++
5	5	5	18	—	33	1.44	1.44	1.44	5.18	—	3.0	9.50	11.0	0.3	2.70	3.46	3.51	9.5	6.3	A++
5	5	5	22	—	37	1.28	1.28	1.28	5.65	—	3.0	9.50	11.0	0.3	2.70	3.46	3.51	9.5	6.3	A++
5	5	5	24	—	39	1.22	1.22	1.22	5.85	—	3.0	9.50	11.0	0.3	2.70	3.46	3.51	9.5	6.3	A++
5	5	7	12	—	29	1.38	1.38	1.93	3.31	—	3.0	8.00	10.4	0.3	2.31	3.13	3.46	8.5	6.4	A++
5	5	7	14	—	31	1.45	1.45	2.03	4.06	—	3.0	9.00	11.0	0.3	2.50	3.46	3.59	9.0	6.4	A++
5	5	7	18	—	35	1.36	1.36	1.90	4.89	—	3.0	9.50	11.0	0.3	2.70	3.46	3.51	9.5	6.3	A++
5	5	7	22	—	39	1.22	1.22	1.71	5.36	—	3.0	9.50	11.0	0.3	2.70	3.46	3.51	9.5	6.3	A++
5	5	7	24	—	41	1.16	1.16	1.62	5.56	—	3.0	9.50	11.0	0.3	2.70	3.46	3.51	9.5	6.3	A++
5	5	9	9	—	28	1.43	1.43	2.57	2.57	—	3.0	8.00	10.0	0.3	2.21	2.98	3.62	8.0	6.5	A++
5	5	9	12	—	31	1.45	1.45	2.61	3.48	—	3.0	9.00	11.0	0.3	2.50	3.46	3.59	9.0	6.4	A++
5	5	9	14	—	33	1.44	1.44	2.59	4.03	—	3.0	9.50	11.0	0.3	2.70	3.46	3.51	9.5	6.3	A++
5	5	9	18	—	37	1.28	1.28	2.31	4.62	—	3.0	9.50	11.0	0.3	2.70	3.46	3.51	9.5	6.3	A++
5	5	9	22	—	41	1.16	1.16	2.09	5.10	—	3.0	9.50	11.0	0.3	2.70	3.46	3.51	9.5	6.3	A++
5	5	9	24	—	43	1.10	1.10	1.99	5.30	—	3.0	9.50	11.0	0.3	2.70	3.46	3.51	9.5	6.3	A++
5	5	12	12	—	34	1.40	1.40	3.35	3.35	—	3.0	9.50	11.0	0.3	2.70	3.46	3.51	9.5	6.3	A++
5	5	12	14	—	36	1.32	1.32	3.17	3.69	—	3.0	9.50	11.0	0.3	2.70	3.46	3.51	9.5	6.3	A++
5	5	12	18	—	40	1.19	1.19	2.85	4.28	—	3.0	9.50	11.0	0.3	2.70	3.46	3.51	9.5	6.3	A++
5	5	12	22	—	44	1.08	1.08	2.59	4.75	—	3.0	9.50	11.0	0.3	2.70	3.46	3.51	9.5	6.3	A++
5	5	12	24	—	46	1.03	1.03	2.48	4.96	—	3.0	9.50	11.0	0.3	2.70	3.46	3.51	9.5	6.3	A++
5	5	14	14	—	38	1.25	1.25	3.50	3.50	—	3.0	9.50	11.0	0.3	2.70	3.46	3.51	9.5	6.3	A++
5	5	14	18	—	42	1.13	1.13	3.17	4.07	—	3.0	9.50	11.0	0.3	2.70	3.46	3.51	9.5	6.3	A++
5	5	14	22	—	46	1.03	1.03	2.89	4.54	—	3.0	9.50	11.0	0.3	2.70	3.46	3.51	9.5	6.3	A++
5	5	14	24	—	48	0.99	0.99	2.77	4.75	—	3.0	9.50	11.0	0.3	2.70	3.46	3.51	9.5	6.3	A++
5	5	18	18	—	46	1.03	1.03	3.72	3.72	—	3.0	9.50	11.0	0.3	2.70	3.46	3.51	9.5	6.3	A++
5	5	18	22	—	50	0.95	0.95	3.42	4.18	—	3.0	9.50	11.0	0.3	2.70	3.46	3.51	9.5	6.3	A++
5	5	18	24	—	52	0.91	0.91	3.29	4.38	—	3.0	9.50	11.0	0.3	2.70	3.46	3.51	9.5	6.3	A++
5	7	7	9	—	28	1.43	2.00	2.00	2.57	—	3.0	8.00	10.0	0.3	2.21	2.98	3.62	9.0	6.4	A++
5	7	7	12	—	31	1.45	2.03	2.03	3.48	—	3.0	9.00	11.0	0.3	2.50	3.46	3.59	9.5	6.3	A++
5	7	7	14	—	33	1.44	2.02	2.02	4.03	—	3.0	9.50	11.0	0.3	2.70	3.46	3.51	9.5	6.3	A++
5	7	7	18	—	37	1.28	1.80	1.80	4.62	—	3.0	9.50	11.0	0.3	2.70	3.46	3.51	9.5	6.3	A++
5	7	7	22	—	41	1.16	1.62	1.62	5.10	—	3.0	9.50	11.0	0.3	2.70	3.46	3.51	9.5	6.3	A++
5	7	7	24	—	43	1.10	1.55	1.55	5.30	—	3.0	9.50	11.0	0.3	2.70	3.46	3.51	8.5	6.4	A++
5	7	9	9	—	30	1.42	1.98	2.55	2.55	—	3.0	8.50	10.7	0.3	2.41	3.28	3.53	9.5	6.3	A++
5	7	9	12	—	33	1.44	2.02	2.59	3.45	—	3.0	9.50	11.0	0.3	2.70	3.46	3.51	9.5	6.3	A++
5	7	9	14	—	35	1.36	1.90	2.44	3.80	—	3.0	9.50	11.0	0.3	2.70	3.46	3.51	9.5	6.3	A++
5	7	9	18	—	39	1.22	1.71	2.19	4.38	—	3.0	9.50	11.0	0.3	2.70	3.46	3.51	9.5	6.3	A++
5	7	9	22	—	43	1.10	1.55	1.99	4.86	—	3.0	9.50	11.0	0.3	2.70	3.46	3.51	9.5	6.3	A++
5	7	9	24	—	45	1.06	1.48	1.90	5.07	—	3.0	9.50	11.0	0.3	2.70	3.46	3.51	9.5	6.3	A++
5	7	12	12	—	36	1.32	1.85	3.17	3.17	—	3.0	9.50	11.0	0.3	2.70	3.46	3.51	9.5	6.3	A++
5	7	12	14	—	38	1.25	1.75	3.00	3.50	—	3.0	9.50	11.0	0.3	2.70	3.46	3.51	9.5	6.3	A++
5	7	12	18	—	42	1.13	1.58	2.71	4.07	—	3.0	9.50	11.0	0.3	2.70	3.46	3.51	9.5	6.3	A++
5	7	12	22	—	46	1.03	1.45	2.48	4.54	—	3.0	9.50	11.0	0.3	2.70	3.46	3.51	9.5	6.3	A++
5	7	12	24	—	48	0.99	1.39	2.38	4.75	—	3.0	9.50	11.0	0.3	2.70	3.46	3.51	9.5	6.3	A++
5	7	14	14	—	40	1.19	1.66	3.33	3.33	—	3.0	9.50	11.0	0.3	2.70	3.46	3.51	9.5	6.3	A++

OUTDOOR UNIT AOEG36KBTA5

Combination of indoor unit						Rated capacity for each indoor unit (kW)					Total capacity (kW)			Input power (kW)			EER (W/W)	Seasonal data		
Room					Total	Room					Min.	Rated	Max.	Min.	Rated	Max.		Pdesign (kW)	SEER (kWh/kWh)	Energy efficiency class
1	2	3	4	5		1	2	3	4	5										
5	7	14	18	—	44	1.08	1.51	3.02	3.89	—	3.0	9.50	11.0	0.3	2.70	3.46	3.51	9.5	6.3	A++
5	7	14	22	—	48	0.99	1.39	2.77	4.35	—	3.0	9.50	11.0	0.3	2.70	3.46	3.51	9.5	6.3	A++
5	7	14	24	—	50	0.95	1.33	2.66	4.56	—	3.0	9.50	11.0	0.3	2.70	3.46	3.51	9.5	6.3	A++
5	7	18	18	—	48	0.99	1.39	3.56	3.56	—	3.0	9.50	11.0	0.3	2.70	3.46	3.51	9.5	6.3	A++
5	7	18	22	—	52	0.91	1.28	3.29	4.02	—	3.0	9.50	11.0	0.3	2.70	3.46	3.51	9.5	6.3	A++
5	7	18	24	—	54	0.88	1.23	3.17	4.22	—	3.0	9.50	11.0	0.3	2.70	3.46	3.51	9.0	6.4	A++
5	9	9	9	—	32	1.41	2.53	2.53	2.53	—	3.0	9.00	11.0	0.3	2.50	3.46	3.60	9.5	6.3	A++
5	9	9	12	—	35	1.36	2.44	2.44	3.26	—	3.0	9.50	11.0	0.3	2.70	3.46	3.51	9.5	6.3	A++
5	9	9	14	—	37	1.28	2.31	2.31	3.59	—	3.0	9.50	11.0	0.3	2.70	3.46	3.51	9.5	6.3	A++
5	9	9	18	—	41	1.16	2.09	2.09	4.17	—	3.0	9.50	11.0	0.3	2.70	3.46	3.51	9.5	6.3	A++
5	9	9	22	—	45	1.06	1.90	1.90	4.64	—	3.0	9.50	11.0	0.3	2.70	3.46	3.51	9.5	6.3	A++
5	9	9	24	—	47	1.01	1.82	1.82	4.85	—	3.0	9.50	11.0	0.3	2.70	3.46	3.51	9.5	6.3	A++
5	9	12	12	—	38	1.25	2.25	3.00	3.00	—	3.0	9.50	11.0	0.3	2.70	3.46	3.51	9.5	6.3	A++
5	9	12	14	—	40	1.19	2.14	2.85	3.33	—	3.0	9.50	11.0	0.3	2.70	3.46	3.51	9.5	6.3	A++
5	9	12	18	—	44	1.08	1.94	2.59	3.89	—	3.0	9.50	11.0	0.3	2.70	3.46	3.51	9.5	6.3	A++
5	9	12	22	—	48	0.99	1.78	2.38	4.35	—	3.0	9.50	11.0	0.3	2.70	3.46	3.51	9.5	6.3	A++
5	9	12	24	—	50	0.95	1.71	2.28	4.56	—	3.0	9.50	11.0	0.3	2.70	3.46	3.51	9.5	6.3	A++
5	9	14	14	—	42	1.13	2.04	3.17	3.17	—	3.0	9.50	11.0	0.3	2.70	3.46	3.51	9.5	6.3	A++
5	9	14	18	—	46	1.03	1.86	2.89	3.72	—	3.0	9.50	11.0	0.3	2.70	3.46	3.51	9.5	6.3	A++
5	9	14	22	—	50	0.95	1.71	2.66	4.18	—	3.0	9.50	11.0	0.3	2.70	3.46	3.51	9.5	6.3	A++
5	9	14	24	—	52	0.91	1.64	2.56	4.38	—	3.0	9.50	11.0	0.3	2.70	3.46	3.51	9.5	6.3	A++
5	9	18	18	—	50	0.95	1.71	3.42	3.42	—	3.0	9.50	11.0	0.3	2.70	3.46	3.51	9.5	6.3	A++
5	9	18	22	—	54	0.88	1.58	3.17	3.87	—	3.0	9.50	11.0	0.3	2.70	3.46	3.51	9.5	6.3	A++
5	12	12	12	—	41	1.16	2.78	2.78	2.78	—	3.0	9.50	11.0	0.3	2.70	3.46	3.51	9.5	6.3	A++
5	12	12	14	—	43	1.10	2.65	2.65	3.09	—	3.0	9.50	11.0	0.3	2.70	3.46	3.51	9.5	6.3	A++
5	12	12	18	—	47	1.01	2.43	2.43	3.64	—	3.0	9.50	11.0	0.3	2.70	3.46	3.51	9.5	6.3	A++
5	12	12	22	—	51	0.93	2.24	2.24	4.10	—	3.0	9.50	11.0	0.3	2.70	3.46	3.51	9.5	6.3	A++
5	12	12	24	—	53	0.90	2.15	2.15	4.30	—	3.0	9.50	11.0	0.3	2.70	3.46	3.51	9.5	6.3	A++
5	12	14	14	—	45	1.06	2.53	2.96	2.96	—	3.0	9.50	11.0	0.3	2.70	3.46	3.51	9.5	6.3	A++
5	12	14	18	—	49	0.97	2.33	2.71	3.49	—	3.0	9.50	11.0	0.3	2.70	3.46	3.51	9.5	6.3	A++
5	12	14	22	—	53	0.90	2.15	2.51	3.94	—	3.0	9.50	11.0	0.3	2.70	3.46	3.51	9.5	6.3	A++
5	12	18	18	—	53	0.90	2.15	3.23	3.23	—	3.0	9.50	11.0	0.3	2.70	3.46	3.51	9.5	6.3	A++
5	14	14	14	—	47	1.01	2.83	2.83	2.83	—	3.0	9.50	11.0	0.3	2.70	3.46	3.51	9.5	6.3	A++
5	14	14	18	—	51	0.93	2.61	2.61	3.35	—	3.0	9.50	11.0	0.3	2.70	3.46	3.51	8.0	6.5	A++
7	7	7	7	—	28	2.00	2.00	2.00	2.00	—	3.0	8.00	10.0	0.3	2.21	2.98	3.62	8.5	6.4	A++
7	7	7	9	—	30	2.00	2.00	2.00	2.50	—	3.0	8.50	10.7	0.3	2.41	3.28	3.53	9.5	6.3	A++
7	7	7	12	—	33	2.00	2.00	2.00	3.50	—	3.0	9.50	11.0	0.3	2.70	3.46	3.51	9.5	6.3	A++
7	7	7	14	—	35	1.90	1.90	1.90	3.80	—	3.0	9.50	11.0	0.3	2.70	3.46	3.51	9.5	6.3	A++
7	7	7	18	—	39	1.71	1.71	1.71	4.38	—	3.0	9.50	11.0	0.3	2.70	3.46	3.51	9.5	6.3	A++
7	7	7	22	—	43	1.55	1.55	1.55	4.86	—	3.0	9.50	11.0	0.3	2.70	3.46	3.51	9.5	6.3	A++
7	7	7	24	—	45	1.48	1.48	1.48	5.07	—	3.0	9.50	11.0	0.3	2.70	3.46	3.51	9.0	6.4	A++
7	7	9	9	—	32	2.00	2.00	2.50	2.50	—	3.0	9.00	11.0	0.3	2.50	3.46	3.60	9.5	6.3	A++
7	7	9	12	—	35	1.90	1.90	2.44	3.26	—	3.0	9.50	11.0	0.3	2.70	3.46	3.51	9.5	6.3	A++
7	7	9	14	—	37	1.80	1.80	2.31	3.59	—	3.0	9.50	11.0	0.3	2.70	3.46	3.51	9.5	6.3	A++
7	7	9	18	—	41	1.62	1.62	2.09	4.17	—	3.0	9.50	11.0	0.3	2.70	3.46	3.51	9.5	6.3	A++
7	7	9	22	—	45	1.48	1.48	1.90	4.64	—	3.0	9.50	11.0	0.3	2.70	3.46	3.51	9.5	6.3	A++
7	7	9	24	—	47	1.41	1.41	1.82	4.85	—	3.0	9.50	11.0	0.3	2.70	3.46	3.51	9.5	6.3	A++
7	7	12	12	—	38	1.75	1.75	3.00	3.00	—	3.0	9.50	11.0	0.3	2.70	3.46	3.51	9.5	6.3	A++
7	7	12	14	—	40	1.66	1.66	2.85	3.33	—	3.0	9.50	11.0	0.3	2.70	3.46	3.51	9.5	6.3	A++
7	7	12	18	—	44	1.51	1.51	2.59	3.89	—	3.0	9.50	11.0	0.3	2.70	3.46	3.51	9.5	6.3	A++
7	7	12	22	—	48	1.39	1.39	2.38	4.35	—	3.0	9.50	11.0	0.3	2.70	3.46	3.51	9.5	6.3	A++
7	7	12	24	—	50	1.33	1.33	2.28	4.56	—	3.0	9.50	11.0	0.3	2.70	3.46	3.51	9.5	6.3	A++
7	7	14	14	—	42	1.58	1.58	3.17	3.17	—	3.0	9.50	11.0	0.3	2.70	3.46	3.51	9.5	6.3	A++
7	7	14	18	—	46	1.45	1.45	2.89	3.72	—	3.0	9.50	11.0	0.3	2.70	3.46	3.51	9.5	6.3	A++
7	7	14	22	—	50	1.33	1.33	2.66	4.18	—	3.0	9.50	11.0	0.3	2.70	3.46	3.51	9.5	6.3	A++
7	7	14	24	—	52	1.28	1.28	2.56	4.38	—	3.0	9.50	11.0	0.3	2.70	3.46	3.51	9.5	6.3	A++
7	7	18	18	—	50	1.33	1.33	3.42	3.42	—	3.0	9.50	11.0	0.3	2.70	3.46	3.51	9.5	6.3	A++
7	9	9	9	—	34	2.00	2.50	2.50	2.50	—	3.0	9.50	11.0	0.3	2.70	3.46	3.51	9.5	6.3	A++
7	9	9	12	—	37	1.80	2.31	2.31	3.08	—	3.0	9.50	11.0	0.3	2.70	3.46	3.51	9.5	6.3	A++
7	9	9	14	—	39	1.71	2.19	2.19	3.41	—	3.0	9.50	11.0	0.3	2.70	3.46	3.51	9.5	6.3	A++
7	9	9	18	—	43	1.55	1.99	1.99	3.98	—	3.0	9.50	11.0	0.3	2.70	3.46	3.51	9.5	6.3	A++
7	9	9	22	—	47	1.41	1.82	1.82	4.45	—	3.0	9.50	11.0	0.3	2.70	3.46	3.51	9.5	6.3	A++
7	9	9	24	—	49	1.36	1.74	1.74	4.65	—	3.0	9.50	11.0	0.3	2.70	3.46	3.51	9.5	6.3	A++
7	9	12	12	—	40	1.66	2.14	2.85	2.85	—	3.0	9.50	11.0	0.3	2.70	3.46	3.51	9.5	6.3	A++
7	9	12	14	—	42	1.58	2.04	2.71	3.17	—	3.0	9.50	11.0	0.3	2.70	3.46	3.51	9.5	6.3	A++
7	9	12	18	—	46	1.45	1.86	2.48	3.72	—	3.0	9.50	11.0	0.3	2.70	3.46	3.51	9.5	6.3	A++
7	9	12	22	—	50	1.33	1.71	2.28	4.18	—	3.0	9.50	11.0	0.3	2.70	3.46	3.51	9.5	6.3	A++
7	9	12	24	—	52	1.28	1.64	2.19	4.38	—	3.0	9.50	11.0	0.3	2.70	3.46	3.51	9.5	6.3	A++
7	9	14	14	—	44	1.51	1.94	3.02	3.02	—	3.0	9.50	11.0	0.3	2.70	3.46	3.51	9.5	6.3	A++
7	9	14	18	—	48	1.39	1.78	2.77	3.56	—	3.0	9.50	11.0	0.3	2.70	3.46	3.51	9.5	6.3	A++
7	9	14	22	—	52	1.28	1.64	2.56	4.02	—	3.0	9.50	11.0	0.3	2.70	3.46	3.51	9.5	6.3	A++
7	9	14	24	—	54	1.23	1.58	2.46	4.22	—	3.0	9.50	11.0	0.3	2.70	3.46	3.51	9.5	6.3	A++
7	9	18	18	—	52	1.28	1.64	3.29	3.29	—	3.0	9.50	11.0	0.3	2.70	3.46	3.51	9.5	6.3	A++
7	12	12	12	—	43	1.55	2.65	2.65	2.65	—	3.0	9.50	11.0	0.3	2.70	3.46	3.51	9.5	6.3	A++
7	12	12	14	—	45	1.48	2.53	2.53	2.96	—	3.0	9.50	11.0	0.3	2.70	3.46	3.51	9.5	6.3	A++
7	12	12	18	—	49	1.36	2.33	2.33	3.49	—	3.0	9.50	11.0	0.3	2.70	3.46	3.51	9.5	6.3	A++
7	12	14	14	—	47	1.41	2.43	2.83	2.83	—	3.0	9.50	11.0	0.3	2.70	3.46	3.51	9.5	6.3	A++
7	12	14	18	—	51	1.30	2.24	2.61	3.35	—	3.0	9.50	11.0	0.3	2.70	3.46	3.51	9.5	6.3	A++
7	14	14	14	—	49	1.36	2.71	2.71	2.71	—	3.0	9.50	11.0	0.3	2.70	3.46	3.51	9.5	6.3	A++
7	14	14	18	—	53	1.25	2.51	2.51	3.23	—	3.0	9.50	11.0	0.3	2.70	3.46	3.51	9.5	6.3	A++
9	9	9	9	—	36	2.38	2.38	2.38	2.38	—	3.0	9.50	11.0	0.3	2.70	3.46	3.51	9.5	6.3	A++
9	9	9	12	—	39	2.19	2.19	2.19	2.92	—	3.0	9.50	11.0	0.3	2.70	3.46	3.51	9.5	6.3	A++
9	9	9	14	—	41	2.09	2.09	2.09	3.24	—	3.0	9.50	11.0	0.3	2.70	3.46	3.51	9.5	6.3	A++
9	9	9	18	—	45	1.90	1.90	1.90	3.80	—	3.0	9.50	11.0	0.3	2.70	3.46	3.51	9.5	6.3	A++
9	9	9	22	—	49	1.74	1.74	1.74	4.27	—	3.0	9.50	11.0	0.3	2.70	3.46	3.51	9.5	6.3	A++
9	9	9	24	—	51	1.68	1.68	1.68	4.47	—	3.0	9.50	11.0	0.3	2.70	3.46	3.51	9.5	6.3	A++
9	9	12	12	—	42	2.04	2.04	2.71	2.71	—	3.0	9.50	11.0	0.3	2.70	3.46	3.51	9.5	6.3	A++
9	9	12	14	—	44	1.94	1.94	2.59	3.02	—	3.0	9.50	11.0	0.3	2.70	3.46	3.51	9.5	6.3	A++
9	9	12	18	—	48	1.78	1.78	2.38	3.56	—	3.0	9.50	11.0	0.3	2.70	3.46	3.51	9.5	6.3	A++

OUTDOOR UNIT
AOEG36KBTA5

Combination of indoor unit						Rated capacity for each indoor unit (kW)					Total capacity (kW)			Input power (kW)			EER (W/W)	Seasonal data		
Room					Total	Room					Min.	Rated	Max.	Min.	Rated	Max.		Pdesign (kW)	SEER (kWh/kWh)	Energy efficiency class
1	2	3	4	5		1	2	3	4	5										
9	9	12	22	—	52	1.64	1.64	2.19	4.02	—	3.0	9.50	11.0	0.3	2.70	3.46	3.51	9.5	6.3	A++
9	9	12	24	—	54	1.58	1.58	2.11	4.22	—	3.0	9.50	11.0	0.3	2.70	3.46	3.51	9.5	6.3	A++
9	9	14	14	—	46	1.86	1.86	2.89	2.89	—	3.0	9.50	11.0	0.3	2.70	3.46	3.51	9.5	6.3	A++
9	9	14	18	—	50	1.71	1.71	2.66	3.42	—	3.0	9.50	11.0	0.3	2.70	3.46	3.51	9.5	6.3	A++
9	9	18	18	—	54	1.58	1.58	3.17	3.17	—	3.0	9.50	11.0	0.3	2.70	3.46	3.51	9.5	6.3	A++
9	12	12	12	—	45	1.90	2.53	2.53	2.53	—	3.0	9.50	11.0	0.3	2.70	3.46	3.51	9.5	6.3	A++
9	12	12	14	—	47	1.82	2.43	2.43	2.83	—	3.0	9.50	11.0	0.3	2.70	3.46	3.51	9.5	6.3	A++
9	12	12	18	—	51	1.68	2.24	2.24	3.35	—	3.0	9.50	11.0	0.3	2.70	3.46	3.51	9.5	6.3	A++
9	12	14	14	—	49	1.74	2.33	2.71	2.71	—	3.0	9.50	11.0	0.3	2.70	3.46	3.51	9.5	6.3	A++
9	12	14	18	—	53	1.61	2.15	2.51	3.23	—	3.0	9.50	11.0	0.3	2.70	3.46	3.51	9.5	6.3	A++
9	14	14	14	—	51	1.68	2.61	2.61	2.61	—	3.0	9.50	11.0	0.3	2.70	3.46	3.51	9.5	6.3	A++
12	12	12	12	—	48	2.38	2.38	2.38	2.38	—	3.0	9.50	11.0	0.3	2.70	3.46	3.51	9.5	6.3	A++
12	12	12	14	—	50	2.28	2.28	2.28	2.66	—	3.0	9.50	11.0	0.3	2.70	3.46	3.51	9.5	6.3	A++
12	12	12	18	—	54	2.11	2.11	2.11	3.17	—	3.0	9.50	11.0	0.3	2.70	3.46	3.51	9.5	6.3	A++
12	12	14	14	—	52	2.19	2.19	2.56	2.56	—	3.0	9.50	11.0	0.3	2.70	3.46	3.51	9.5	6.3	A++
12	14	14	14	—	54	2.11	2.46	2.46	2.46	—	3.0	9.50	11.0	0.3	2.70	3.46	3.51	8.0	6.7	A++
5	5	5	5	7	27	1.39	1.39	1.39	1.39	1.94	3.0	7.50	9.6	0.3	1.72	2.84	4.35	8.5	6.6	A++
5	5	5	5	9	29	1.38	1.38	1.38	1.38	2.48	3.0	8.00	10.4	0.3	1.92	3.13	4.16	9.5	6.5	A++
5	5	5	5	12	32	1.41	1.41	1.41	1.41	3.38	3.0	9.00	11.0	0.3	2.21	3.46	4.06	9.5	6.5	A++
5	5	5	5	14	34	1.40	1.40	1.40	1.40	3.91	3.0	9.50	11.0	0.3	2.41	3.46	3.93	9.5	6.5	A++
5	5	5	5	18	38	1.25	1.25	1.25	1.25	4.5	3.0	9.50	11.0	0.3	2.51	3.46	3.78	9.5	6.5	A++
5	5	5	5	22*	42	1.13	1.13	1.13	1.13	4.98	3.0	9.50	11.0	0.3	2.51	3.46	3.78	9.5	6.5	A++
5	5	5	5	24	44	1.08	1.08	1.08	1.08	5.18	3.0	9.50	11.0	0.3	2.51	3.46	3.78	8.5	6.6	A++
5	5	5	7	7	29	1.38	1.38	1.38	1.93	1.93	3.0	8.00	10.4	0.3	1.92	3.13	4.16	9.0	6.6	A++
5	5	5	7	9	31	1.45	1.45	1.45	2.03	2.61	3.0	9.00	11.0	0.3	2.12	3.46	4.25	9.5	6.5	A++
5	5	5	7	12	34	1.40	1.40	1.40	1.96	3.35	3.0	9.50	11.0	0.3	2.41	3.46	3.93	9.5	6.5	A++
5	5	5	7	14	36	1.32	1.32	1.32	1.85	3.69	3.0	9.50	11.0	0.3	2.51	3.46	3.78	9.5	6.5	A++
5	5	5	7	18	40	1.19	1.19	1.19	1.66	4.28	3.0	9.50	11.0	0.3	2.51	3.46	3.78	9.5	6.5	A++
5	5	5	7	22*	44	1.08	1.08	1.08	1.51	4.75	3.0	9.50	11.0	0.3	2.51	3.46	3.78	9.5	6.5	A++
5	5	5	7	24	46	1.03	1.03	1.03	1.45	4.96	3.0	9.50	11.0	0.3	2.51	3.46	3.78	9.5	6.5	A++
5	5	5	9	9	33	1.44	1.44	1.44	2.59	2.59	3.0	9.50	11.0	0.3	2.31	3.46	4.10	9.5	6.5	A++
5	5	5	9	12	36	1.32	1.32	1.32	2.38	3.17	3.0	9.50	11.0	0.3	2.51	3.46	3.78	9.5	6.5	A++
5	5	5	9	14	38	1.25	1.25	1.25	2.25	3.5	3.0	9.50	11.0	0.3	2.51	3.46	3.78	9.5	6.5	A++
5	5	5	9	18	42	1.13	1.13	1.13	2.04	4.07	3.0	9.50	11.0	0.3	2.51	3.46	3.78	9.5	6.5	A++
5	5	5	9	22*	46	1.03	1.03	1.03	1.86	4.54	3.0	9.50	11.0	0.3	2.51	3.46	3.78	9.5	6.5	A++
5	5	5	9	24	48	0.99	0.99	0.99	1.78	4.75	3.0	9.50	11.0	0.3	2.51	3.46	3.78	9.5	6.5	A++
5	5	5	12	12	39	1.22	1.22	1.22	2.92	2.92	3.0	9.50	11.0	0.3	2.51	3.46	3.78	9.5	6.5	A++
5	5	5	12	14	41	1.16	1.16	1.16	2.78	3.24	3.0	9.50	11.0	0.3	2.51	3.46	3.78	9.5	6.5	A++
5	5	5	12	18	45	1.06	1.06	1.06	2.53	3.80	3.0	9.50	11.0	0.3	2.51	3.46	3.78	9.5	6.5	A++
5	5	5	12	22*	49	0.97	0.97	0.97	2.33	4.27	3.0	9.50	11.0	0.3	2.51	3.46	3.78	9.5	6.5	A++
5	5	5	12	24	51	0.93	0.93	0.93	2.24	4.47	3.0	9.50	11.0	0.3	2.51	3.46	3.78	9.5	6.5	A++
5	5	5	14	14	43	1.10	1.10	1.10	3.09	3.09	3.0	9.50	11.0	0.3	2.51	3.46	3.78	9.5	6.5	A++
5	5	5	14	18	47	1.01	1.01	1.01	2.83	3.64	3.0	9.50	11.0	0.3	2.51	3.46	3.78	9.5	6.5	A++
5	5	5	14	22*	51	0.93	0.93	0.93	2.61	4.10	3.0	9.50	11.0	0.3	2.51	3.46	3.78	9.5	6.5	A++
5	5	5	14	24	53	0.90	0.90	0.90	2.51	4.30	3.0	9.50	11.0	0.3	2.51	3.46	3.78	9.5	6.5	A++
5	5	5	18	18	51	0.93	0.93	0.93	3.35	3.35	3.0	9.50	11.0	0.3	2.51	3.46	3.78	9.0	6.6	A++
5	5	7	7	7	31	1.45	1.45	2.03	2.03	2.03	3.0	9.00	11.0	0.3	2.12	3.46	4.25	9.5	6.5	A++
5	5	7	7	9	33	1.44	1.44	2.02	2.02	2.59	3.0	9.50	11.0	0.3	2.31	3.46	4.10	9.5	6.5	A++
5	5	7	7	12	36	1.32	1.32	1.85	1.85	3.17	3.0	9.50	11.0	0.3	2.51	3.46	3.78	9.5	6.5	A++
5	5	7	7	14	38	1.25	1.25	1.75	1.75	3.50	3.0	9.50	11.0	0.3	2.51	3.46	3.78	9.5	6.5	A++
5	5	7	7	18	42	1.13	1.13	1.58	1.58	4.07	3.0	9.50	11.0	0.3	2.51	3.46	3.78	9.5	6.5	A++
5	5	7	7	22*	46	1.03	1.03	1.45	1.45	4.54	3.0	9.50	11.0	0.3	2.51	3.46	3.78	9.5	6.5	A++
5	5	7	7	24	48	0.99	0.99	1.39	1.39	4.75	3.0	9.50	11.0	0.3	2.51	3.46	3.78	9.5	6.5	A++
5	5	7	9	9	35	1.36	1.36	1.90	2.44	2.44	3.0	9.50	11.0	0.3	2.51	3.46	3.78	9.5	6.5	A++
5	5	7	9	12	38	1.25	1.25	1.75	2.25	3.00	3.0	9.50	11.0	0.3	2.51	3.46	3.78	9.5	6.5	A++
5	5	7	9	14	40	1.19	1.19	1.66	2.14	3.33	3.0	9.50	11.0	0.3	2.51	3.46	3.78	9.5	6.5	A++
5	5	7	9	18	44	1.08	1.08	1.51	1.94	3.89	3.0	9.50	11.0	0.3	2.51	3.46	3.78	9.5	6.5	A++
5	5	7	9	22*	48	0.99	0.99	1.39	1.78	4.35	3.0	9.50	11.0	0.3	2.51	3.46	3.78	9.5	6.5	A++
5	5	7	9	24	50	0.95	0.95	1.33	1.71	4.56	3.0	9.50	11.0	0.3	2.51	3.46	3.78	9.5	6.5	A++
5	5	7	12	12	41	1.16	1.16	1.62	2.78	2.78	3.0	9.50	11.0	0.3	2.51	3.46	3.78	9.5	6.5	A++
5	5	7	12	14	43	1.10	1.10	1.55	2.65	3.09	3.0	9.50	11.0	0.3	2.51	3.46	3.78	9.5	6.5	A++
5	5	7	12	18	47	1.01	1.01	1.41	2.43	3.64	3.0	9.50	11.0	0.3	2.51	3.46	3.78	9.5	6.5	A++
5	5	7	12	22*	51	0.93	0.93	1.30	2.24	4.10	3.0	9.50	11.0	0.3	2.51	3.46	3.78	9.5	6.5	A++
5	5	7	12	24	53	0.90	0.90	1.25	2.15	4.30	3.0	9.50	11.0	0.3	2.51	3.46	3.78	9.5	6.5	A++
5	5	7	14	14	45	1.06	1.06	1.48	2.96	2.96	3.0	9.50	11.0	0.3	2.51	3.46	3.78	9.5	6.5	A++
5	5	7	14	18	49	0.97	0.97	1.36	2.71	3.49	3.0	9.50	11.0	0.3	2.51	3.46	3.78	9.5	6.5	A++
5	5	7	14	22*	53	0.90	0.90	1.25	2.51	3.94	3.0	9.50	11.0	0.3	2.51	3.46	3.78	9.5	6.5	A++
5	5	7	18	18	53	0.90	0.90	1.25	3.23	3.23	3.0	9.50	11.0	0.3	2.51	3.46	3.78	9.5	6.5	A++
5	5	9	9	9	37	1.28	1.28	2.31	2.31	2.31	3.0	9.50	11.0	0.3	2.51	3.46	3.78	9.5	6.5	A++
5	5	9	9	12	40	1.19	1.19	2.14	2.14	2.85	3.0	9.50	11.0	0.3	2.51	3.46	3.78	9.5	6.5	A++
5	5	9	9	14	42	1.13	1.13	2.04	2.04	3.17	3.0	9.50	11.0	0.3	2.51	3.46	3.78	9.5	6.5	A++
5	5	9	9	18	46	1.03	1.03	1.86	1.86	3.72	3.0	9.50	11.0	0.3	2.51	3.46	3.78	9.5	6.5	A++
5	5	9	9	22*	50	0.95	0.95	1.71	1.71	4.18	3.0	9.50	11.0	0.3	2.51	3.46	3.78	9.5	6.5	A++
5	5	9	9	24	52	0.91	0.91	1.64	1.64	4.38	3.0	9.50	11.0	0.3	2.51	3.46	3.78	9.5	6.5	A++
5	5	9	12	12	43	1.10	1.10	1.99	2.65	2.65	3.0	9.50	11.0	0.3	2.51	3.46	3.78	9.5	6.5	A++
5	5	9	12	14	45	1.06	1.06	1.90	2.53	2.96	3.0	9.50	11.0	0.3	2.51	3.46	3.78	9.5	6.5	A++
5	5	9	12	18	49	0.97	0.97	1.74	2.33	3.49	3.0	9.50	11.0	0.3	2.51	3.46	3.78	9.5	6.5	A++
5	5	9	12	22*	53	0.90	0.90	1.61	2.15	3.94	3.0	9.50	11.0	0.3	2.51	3.46	3.78	9.5	6.5	A++
5	5	9	14	14	47	1.01	1.01	1.82	2.83	2.83	3.0	9.50	11.0	0.3	2.51	3.46	3.78	9.5	6.5	A++
5	5	9	14	18	51	0.93	0.93	1.68	2.61	3.35	3.0	9.50	11.0	0.3	2.51	3.46	3.78	9.5	6.5	A++
5	5	12	12	12	46	1.03	1.03	2.48	2.48	2.48	3.0	9.50	11.0	0.3	2.51	3.46	3.78	9.5	6.5	A++
5	5	12	12	14	48	0.99	0.99	2.38	2.38	2.77	3.0	9.50	11.0	0.3	2.51	3.46	3.78	9.5	6.5	A++
5	5	12	12	18	52	0.91	0.91	2.19	2.19	3.29	3.0	9.50	11.0	0.3	2.51	3.46	3.78	9.5	6.5	A++
5	5	12	14	14	50	0.95	0.95	2.28	2.66	2.66	3.0	9.50	11.0	0.3	2.51	3.46	3.78	9.5	6.5	A++
5	5	12	14	18	54	0.88	0.88	2.11	2.46	3.17	3.0	9.50	11.0	0.3	2.51	3.46	3.78	9.5	6.5	A++
5	5	14	14	14	52	0.91	0.91	2.56	2.56	2.56	3.0	9.50	11.0	0.3	2.51	3.46	3.78	9.5	6.5	A++
5	7	7	7	7	33	1.44	2.02	2.02	2.02	2.02	3.0	9.50	11.0	0.3	2.31	3.46	4.10	9.5	6.5	A++
5	7	7	7	9	35	1.36	1.90	1.90	1.90	2.44	3.0	9.50	11.0	0.3	2.51	3.46	3.78	9.5	6.5	A++
5	7	7	7	12	38	1.25	1.75	1.75	1.75	3.00	3.0	9.50	11.0	0.3	2.51	3.46	3.78	9.5	6.5	A++

OUTDOOR UNIT AOEG36KBTA5

Combination of indoor unit						Rated capacity for each indoor unit (kW)					Total capacity (kW)			Input power (kW)			EER (W/W)	Seasonal data		
Room					Total	Room					Min.	Rated	Max.	Min.	Rated	Max.		Pdesign (kW)	SEER (kWh/kWh)	Energy efficiency class
1	2	3	4	5		1	2	3	4	5										
5	7	7	7	14	40	1.19	1.66	1.66	1.66	3.33	3.0	9.50	11.0	0.3	2.51	3.46	3.78	9.5	6.5	A++
5	7	7	7	18	44	1.08	1.51	1.51	1.51	3.89	3.0	9.50	11.0	0.3	2.51	3.46	3.78	9.5	6.5	A++
5	7	7	7	22*	48	0.99	1.39	1.39	1.39	4.35	3.0	9.50	11.0	0.3	2.51	3.46	3.78	9.5	6.5	A++
5	7	7	7	24	50	0.95	1.33	1.33	1.33	4.56	3.0	9.50	11.0	0.3	2.51	3.46	3.78	9.5	6.5	A++
5	7	7	9	9	37	1.28	1.80	1.80	2.31	2.31	3.0	9.50	11.0	0.3	2.51	3.46	3.78	9.5	6.5	A++
5	7	7	9	12	40	1.19	1.66	1.66	2.14	2.85	3.0	9.50	11.0	0.3	2.51	3.46	3.78	9.5	6.5	A++
5	7	7	9	14	42	1.13	1.58	1.58	2.04	3.17	3.0	9.50	11.0	0.3	2.51	3.46	3.78	9.5	6.5	A++
5	7	7	9	18	46	1.03	1.45	1.45	1.86	3.72	3.0	9.50	11.0	0.3	2.51	3.46	3.78	9.5	6.5	A++
5	7	7	9	22*	50	0.95	1.33	1.33	1.71	4.18	3.0	9.50	11.0	0.3	2.51	3.46	3.78	9.5	6.5	A++
5	7	7	9	24	52	0.91	1.28	1.28	1.64	4.38	3.0	9.50	11.0	0.3	2.51	3.46	3.78	9.5	6.5	A++
5	7	7	12	12	43	1.10	1.55	1.55	2.65	2.65	3.0	9.50	11.0	0.3	2.51	3.46	3.78	9.5	6.5	A++
5	7	7	12	14	45	1.06	1.48	1.48	2.53	2.96	3.0	9.50	11.0	0.3	2.51	3.46	3.78	9.5	6.5	A++
5	7	7	12	18	49	0.97	1.36	1.36	2.33	3.49	3.0	9.50	11.0	0.3	2.51	3.46	3.78	9.5	6.5	A++
5	7	7	12	22*	53	0.90	1.25	1.25	2.15	3.94	3.0	9.50	11.0	0.3	2.51	3.46	3.78	9.5	6.5	A++
5	7	7	14	14	47	1.01	1.41	1.41	2.83	2.83	3.0	9.50	11.0	0.3	2.51	3.46	3.78	9.5	6.5	A++
5	7	7	14	18	51	0.93	1.30	1.30	2.61	3.35	3.0	9.50	11.0	0.3	2.51	3.46	3.78	9.5	6.5	A++
5	7	9	9	9	39	1.22	1.71	2.19	2.19	2.19	3.0	9.50	11.0	0.3	2.51	3.46	3.78	9.5	6.5	A++
5	7	9	9	12	42	1.13	1.58	2.04	2.04	2.71	3.0	9.50	11.0	0.3	2.51	3.46	3.78	9.5	6.5	A++
5	7	9	9	14	44	1.08	1.51	1.94	1.94	3.02	3.0	9.50	11.0	0.3	2.51	3.46	3.78	9.5	6.5	A++
5	7	9	9	18	48	0.99	1.39	1.78	1.78	3.56	3.0	9.50	11.0	0.3	2.51	3.46	3.78	9.5	6.5	A++
5	7	9	9	22*	52	0.91	1.28	1.64	1.64	4.02	3.0	9.50	11.0	0.3	2.51	3.46	3.78	9.5	6.5	A++
5	7	9	9	24	54	0.88	1.23	1.58	1.58	4.22	3.0	9.50	11.0	0.3	2.51	3.46	3.78	9.5	6.5	A++
5	7	9	12	12	45	1.06	1.48	1.90	2.53	2.53	3.0	9.50	11.0	0.3	2.51	3.46	3.78	9.5	6.5	A++
5	7	9	12	14	47	1.01	1.41	1.82	2.43	2.83	3.0	9.50	11.0	0.3	2.51	3.46	3.78	9.5	6.5	A++
5	7	9	12	18	51	0.93	1.30	1.68	2.24	3.35	3.0	9.50	11.0	0.3	2.51	3.46	3.78	9.5	6.5	A++
5	7	9	14	14	49	0.97	1.36	1.74	2.71	2.71	3.0	9.50	11.0	0.3	2.51	3.46	3.78	9.5	6.5	A++
5	7	9	14	18	53	0.90	1.25	1.61	2.51	3.23	3.0	9.50	11.0	0.3	2.51	3.46	3.78	9.5	6.5	A++
5	7	12	12	12	48	0.99	1.39	2.38	2.38	2.38	3.0	9.50	11.0	0.3	2.51	3.46	3.78	9.5	6.5	A++
5	7	12	12	14	50	0.95	1.33	2.28	2.28	2.66	3.0	9.50	11.0	0.3	2.51	3.46	3.78	9.5	6.5	A++
5	7	12	12	18	54	0.88	1.23	2.11	2.11	3.17	3.0	9.50	11.0	0.3	2.51	3.46	3.78	9.5	6.5	A++
5	7	12	14	14	52	0.91	1.28	2.19	2.56	2.56	3.0	9.50	11.0	0.3	2.51	3.46	3.78	9.5	6.5	A++
5	7	14	14	14	54	0.88	1.23	2.46	2.46	2.46	3.0	9.50	11.0	0.3	2.51	3.46	3.78	9.5	6.5	A++
5	9	9	9	9	41	1.16	2.09	2.09	2.09	2.09	3.0	9.50	11.0	0.3	2.51	3.46	3.78	9.5	6.5	A++
5	9	9	9	12	44	1.08	1.94	1.94	1.94	2.59	3.0	9.50	11.0	0.3	2.51	3.46	3.78	9.5	6.5	A++
5	9	9	9	14	46	1.03	1.86	1.86	1.86	2.89	3.0	9.50	11.0	0.3	2.51	3.46	3.78	9.5	6.5	A++
5	9	9	9	18	50	0.95	1.71	1.71	1.71	3.42	3.0	9.50	11.0	0.3	2.51	3.46	3.78	9.5	6.5	A++
5	9	9	9	22*	54	0.88	1.58	1.58	1.58	3.87	3.0	9.50	11.0	0.3	2.51	3.46	3.78	9.5	6.5	A++
5	9	9	12	12	47	1.01	1.82	1.82	2.43	2.43	3.0	9.50	11.0	0.3	2.51	3.46	3.78	9.5	6.5	A++
5	9	9	12	14	49	0.97	1.74	1.74	2.33	2.71	3.0	9.50	11.0	0.3	2.51	3.46	3.78	9.5	6.5	A++
5	9	9	12	18	53	0.90	1.61	1.61	2.15	3.23	3.0	9.50	11.0	0.3	2.51	3.46	3.78	9.5	6.5	A++
5	9	9	14	14	51	0.93	1.68	1.68	2.61	2.61	3.0	9.50	11.0	0.3	2.51	3.46	3.78	9.5	6.5	A++
5	9	12	12	12	50	0.95	1.71	2.28	2.28	2.28	3.0	9.50	11.0	0.3	2.51	3.46	3.78	9.5	6.5	A++
5	9	12	12	14	52	0.91	1.64	2.19	2.19	2.56	3.0	9.50	11.0	0.3	2.51	3.46	3.78	9.5	6.5	A++
5	9	12	14	14	54	0.88	1.58	2.11	2.46	2.46	3.0	9.50	11.0	0.3	2.51	3.46	3.78	9.5	6.5	A++
5	12	12	12	12	53	0.90	2.15	2.15	2.15	2.15	3.0	9.50	11.0	0.3	2.51	3.46	3.78	9.5	6.5	A++
7	7	7	7	7	35	1.90	1.90	1.90	1.90	1.90	3.0	9.50	11.0	0.3	2.51	3.46	3.78	9.5	6.5	A++
7	7	7	7	9	37	1.80	1.80	1.80	1.80	2.31	3.0	9.50	11.0	0.3	2.51	3.46	3.78	9.5	6.5	A++
7	7	7	7	12	40	1.66	1.66	1.66	1.66	2.85	3.0	9.50	11.0	0.3	2.51	3.46	3.78	9.5	6.5	A++
7	7	7	7	14	42	1.58	1.58	1.58	1.58	3.17	3.0	9.50	11.0	0.3	2.51	3.46	3.78	9.5	6.5	A++
7	7	7	7	18	46	1.45	1.45	1.45	1.45	3.72	3.0	9.50	11.0	0.3	2.51	3.46	3.78	9.5	6.5	A++
7	7	7	7	22*	50	1.33	1.33	1.33	1.33	4.18	3.0	9.50	11.0	0.3	2.51	3.46	3.78	9.5	6.5	A++
7	7	7	7	24	52	1.28	1.28	1.28	1.28	4.38	3.0	9.50	11.0	0.3	2.51	3.46	3.78	9.5	6.5	A++
7	7	7	9	9	39	1.71	1.71	1.71	2.19	2.19	3.0	9.50	11.0	0.3	2.51	3.46	3.78	9.5	6.5	A++
7	7	7	9	12	42	1.58	1.58	1.58	2.04	2.71	3.0	9.50	11.0	0.3	2.51	3.46	3.78	9.5	6.5	A++
7	7	7	9	14	44	1.51	1.51	1.51	1.94	3.02	3.0	9.50	11.0	0.3	2.51	3.46	3.78	9.5	6.5	A++
7	7	7	9	18	48	1.39	1.39	1.39	1.78	3.56	3.0	9.50	11.0	0.3	2.51	3.46	3.78	9.5	6.5	A++
7	7	7	9	22*	52	1.28	1.28	1.28	1.64	4.02	3.0	9.50	11.0	0.3	2.51	3.46	3.78	9.5	6.5	A++
7	7	7	9	24	54	1.23	1.23	1.23	1.58	4.22	3.0	9.50	11.0	0.3	2.51	3.46	3.78	9.5	6.5	A++
7	7	7	12	12	45	1.48	1.48	1.48	2.53	2.53	3.0	9.50	11.0	0.3	2.51	3.46	3.78	9.5	6.5	A++
7	7	7	12	14	47	1.41	1.41	1.41	2.43	2.83	3.0	9.50	11.0	0.3	2.51	3.46	3.78	9.5	6.5	A++
7	7	7	12	18	51	1.30	1.30	1.30	2.24	3.35	3.0	9.50	11.0	0.3	2.51	3.46	3.78	9.5	6.5	A++
7	7	7	14	14	49	1.36	1.36	1.36	2.71	2.71	3.0	9.50	11.0	0.3	2.51	3.46	3.78	9.5	6.5	A++
7	7	7	14	18	53	1.25	1.25	1.25	2.51	3.23	3.0	9.50	11.0	0.3	2.51	3.46	3.78	9.5	6.5	A++
7	7	9	9	9	41	1.62	1.62	2.09	2.09	2.09	3.0	9.50	11.0	0.3	2.51	3.46	3.78	9.5	6.5	A++
7	7	9	9	12	44	1.51	1.51	1.94	1.94	2.59	3.0	9.50	11.0	0.3	2.51	3.46	3.78	9.5	6.5	A++
7	7	9	9	14	46	1.45	1.45	1.86	1.86	2.89	3.0	9.50	11.0	0.3	2.51	3.46	3.78	9.5	6.5	A++
7	7	9	9	18	50	1.33	1.33	1.71	1.71	3.42	3.0	9.50	11.0	0.3	2.51	3.46	3.78	9.5	6.5	A++
7	7	9	9	22*	54	1.23	1.23	1.58	1.58	3.87	3.0	9.50	11.0	0.3	2.51	3.46	3.78	9.5	6.5	A++
7	7	9	12	12	47	1.41	1.41	1.82	2.43	2.43	3.0	9.50	11.0	0.3	2.51	3.46	3.78	9.5	6.5	A++
7	7	9	12	14	49	1.36	1.36	1.74	2.33	2.71	3.0	9.50	11.0	0.3	2.51	3.46	3.78	9.5	6.5	A++
7	7	9	12	18	53	1.25	1.25	1.61	2.15	3.23	3.0	9.50	11.0	0.3	2.51	3.46	3.78	9.5	6.5	A++
7	7	9	14	14	51	1.30	1.30	1.68	2.61	2.61	3.0	9.50	11.0	0.3	2.51	3.46	3.78	9.5	6.5	A++
7	7	12	12	12	50	1.33	1.33	2.28	2.28	2.28	3.0	9.50	11.0	0.3	2.51	3.46	3.78	9.5	6.5	A++
7	7	12	12	14	52	1.28	1.28	2.19	2.19	2.56	3.0	9.50	11.0	0.3	2.51	3.46	3.78	9.5	6.5	A++
7	7	12	14	14	54	1.23	1.23	2.11	2.46	2.46	3.0	9.50	11.0	0.3	2.51	3.46	3.78	9.5	6.5	A++
7	9	9	9	9	43	1.55	1.99	1.99	1.99	1.99	3.0	9.50	11.0	0.3	2.51	3.46	3.78	9.5	6.5	A++
7	9	9	9	12	46	1.45	1.86	1.86	1.86	2.48	3.0	9.50	11.0	0.3	2.51	3.46	3.78	9.5	6.5	A++
7	9	9	9	14	48	1.39	1.78	1.78	1.78	2.77	3.0	9.50	11.0	0.3	2.51	3.46	3.78	9.5	6.5	A++
7	9	9	9	18	52	1.28	1.64	1.64	1.64	3.29	3.0	9.50	11.0	0.3	2.51	3.46	3.78	9.5	6.5	A++
7	9	9	12	12	49	1.36	1.74	1.74	2.33	2.33	3.0	9.50	11.0	0.3	2.51	3.46	3.78	9.5	6.5	A++
7	9	9	12	14	51	1.30	1.68	1.68	2.24	2.61	3.0	9.50	11.0	0.3	2.51	3.46	3.78	9.5	6.5	A++
7	9	9	14	14	53	1.25	1.61	1.61	2.51	2.51	3.0	9.50	11.0	0.3	2.51	3.46	3.78	9.5	6.5	A++
7	9	12	12	12	52	1.28	1.64	2.19	2.19	2.19	3.0	9.50	11.0	0.3	2.51	3.46	3.78	9.5	6.5	A++
7	9	12	12	14	54	1.23	1.58	2.11	2.11	2.46	3.0	9.50	11.0	0.3	2.51	3.46	3.78	9.5	6.5	A++
9	9	9	9	9	45	1.90	1.90	1.90	1.90	1.90	3.0	9.50	11.0	0.3	2.51	3.46	3.78	9.5	6.5	A++
9	9	9	9	12	48	1.78	1.78	1.78	1.78	2.38	3.0	9.50	11.0	0.3	2.51	3.46	3.78	9.5	6.5	A++
9	9	9	9	14	50	1.71	1.71	1.71	1.71	2.66	3.0	9.50	11.0	0.3	2.51	3.46	3.78	9.5	6.5	A++
9	9	9	9	18	54	1.58	1.58	1.58	1.58	3.17	3.0	9.50	11.0	0.3	2.51	3.46	3.78	9.5	6.5	A++
9	9	9	12	12	51	1.68	1.68	1.68	2.24	2.24	3.0	9.50	11.0	0.3	2.51	3.46	3.78	9.5	6.5	A++

Combination of indoor unit						Rated capacity for each indoor unit (kW)					Total capacity (kW)			Input power (kW)			EER (W/W)	Seasonal data		
Room					Total	Room					Min.	Rated	Max.	Min.	Rated	Max.		Pdesign (kW)	SEER (kWh/kWh)	Energy efficiency class
1	2	3	4	5		1	2	3	4	5										
9	9	9	12	14	53	1.61	1.61	1.61	2.15	2.51	3.0	9.50	11.0	0.3	2.51	3.46	3.78	9.5	6.5	A++
9	9	12	12	12	54	1.58	1.58	2.11	2.11	2.11	3.0	9.50	11.0	0.3	2.51	3.46	3.78	9.5	6.5	A++

NOTES:

- 5: 5,000 Btu/h, 7: 7,000 Btu/h, 9: 9,000 Btu/h, 12: 12,000 Btu/h, 14: 14,000 Btu/h, 18: 18,000 Btu/h, 22: 22,000 Btu/h, 24: 24,000 Btu/h
- Values mentioned in the table are based on the following conditions:
  - Power source of specifications: 230 V
  - Pipe length: 5 m, Height difference: 0 m (Outdoor unit—Indoor unit)
  - Cooling: Indoor temperature of 27 °CDB/19 °CWB, and outdoor temperature of 35 °CDB.
- 2 or more indoor units should be connected.
- The total ability of connected a indoor unit is from 27,000 Btu up to 54,000 Btu.
- *: As for the 22 model, wall-mounted type indoor unit is only connectable.

OUTDOOR UNIT AOEG36KBTA5

● Heating

Indoor unit combination (Wall-mounted KG/KM type only)

Combination of indoor unit						Rated capacity for each indoor unit (kW)					Total capacity (kW)			Input power (kW)			COP (W/W)	Seasonal data		
Room					Total	Room														
1	2	3	4	5		1	2	3	4	5	Min.	Rated	Max.	Min.	Rated	Max.		Pdesign (kW)	SCOP (kWh/kWh)	Energy efficiency class
7	24	—	—	—	31	2.39	8.21	—	—	—	3.5	10.60	12.00	0.25	2.65	3.25	4.00	7.0	4.3	A+
9	22	—	—	—	31	3.00	7.20	—	—	—	3.5	10.20	12.00	0.25	2.52	3.25	4.04	6.8	4.3	A+
9	24	—	—	—	33	2.89	7.71	—	—	—	3.5	10.60	12.00	0.25	2.65	3.25	4.00	7.0	4.3	A+
12	22	—	—	—	34	3.74	6.86	—	—	—	3.5	10.60	12.00	0.25	2.65	3.25	4.00	7.0	4.3	A+
12	24	—	—	—	36	3.53	7.07	—	—	—	3.5	10.60	12.00	0.25	2.65	3.25	4.00	7.0	4.3	A+
14	22	—	—	—	36	4.12	6.48	—	—	—	3.5	10.60	12.00	0.25	2.65	3.25	4.00	7.0	4.3	A+
14	24	—	—	—	38	3.91	6.69	—	—	—	3.5	10.60	12.00	0.25	2.65	3.25	4.00	7.0	4.3	A+
18	18	—	—	—	36	5.30	5.30	—	—	—	3.5	10.60	12.00	0.25	2.65	3.25	4.00	7.0	4.3	A+
18	22	—	—	—	40	4.77	5.83	—	—	—	3.5	10.60	12.00	0.25	2.65	3.25	4.00	7.0	4.3	A+
18	24	—	—	—	42	4.54	6.06	—	—	—	3.5	10.60	12.00	0.25	2.65	3.25	4.00	7.0	4.3	A+
22	22	—	—	—	44	5.30	5.30	—	—	—	3.5	10.60	12.00	0.25	2.65	3.25	4.00	7.0	4.3	A+
22	24	—	—	—	46	5.07	5.53	—	—	—	3.5	10.60	12.00	0.25	2.65	3.25	4.00	7.0	4.3	A+
24	24	—	—	—	48	5.30	5.30	—	—	—	3.5	10.60	12.00	0.25	2.65	3.25	4.00	7.0	4.3	A+
7	7	14	—	—	28	2.40	2.40	4.80	—	—	3.5	9.60	11.20	0.25	2.25	2.87	4.26	6.5	4.5	A+
7	7	18	—	—	32	2.32	2.32	5.96	—	—	3.5	10.60	12.00	0.25	2.54	3.25	4.18	7.0	4.4	A+
7	7	22	—	—	36	2.06	2.06	6.48	—	—	3.5	10.60	12.00	0.25	2.54	3.25	4.18	7.0	4.4	A+
7	7	24	—	—	38	1.95	1.95	6.70	—	—	3.5	10.60	12.00	0.25	2.54	3.25	4.18	7.0	4.4	A+
7	9	12	—	—	28	2.40	3.00	4.20	—	—	3.5	9.60	11.20	0.25	2.25	2.87	4.26	6.5	4.5	A+
7	9	14	—	—	30	2.40	3.00	4.80	—	—	3.5	10.20	12.00	0.25	2.42	3.25	4.21	6.8	4.4	A+
7	9	18	—	—	34	2.18	2.81	5.61	—	—	3.5	10.60	12.00	0.25	2.54	3.25	4.18	7.0	4.4	A+
7	9	22	—	—	38	1.95	2.51	6.14	—	—	3.5	10.60	12.00	0.25	2.54	3.25	4.18	7.0	4.4	A+
7	9	24	—	—	40	1.85	2.39	6.36	—	—	3.5	10.60	12.00	0.25	2.54	3.25	4.18	7.0	4.4	A+
7	12	12	—	—	31	2.40	4.10	4.10	—	—	3.5	10.60	12.00	0.25	2.54	3.25	4.18	7.0	4.4	A+
7	12	14	—	—	33	2.25	3.85	4.50	—	—	3.5	10.60	12.00	0.25	2.54	3.25	4.18	7.0	4.4	A+
7	12	18	—	—	37	2.00	3.44	5.16	—	—	3.5	10.60	12.00	0.25	2.54	3.25	4.18	7.0	4.4	A+
7	12	22	—	—	41	1.81	3.10	5.69	—	—	3.5	10.60	12.00	0.25	2.54	3.25	4.18	7.0	4.4	A+
7	12	24	—	—	43	1.72	2.96	5.92	—	—	3.5	10.60	12.00	0.25	2.54	3.25	4.18	7.0	4.4	A+
7	14	14	—	—	35	2.12	4.24	4.24	—	—	3.5	10.60	12.00	0.25	2.54	3.25	4.18	7.0	4.4	A+
7	14	18	—	—	39	1.90	3.81	4.89	—	—	3.5	10.60	12.00	0.25	2.54	3.25	4.18	7.0	4.4	A+
7	14	22	—	—	43	1.73	3.45	5.42	—	—	3.5	10.60	12.00	0.25	2.54	3.25	4.18	7.0	4.4	A+
7	14	24	—	—	45	1.65	3.30	5.65	—	—	3.5	10.60	12.00	0.25	2.54	3.25	4.18	7.0	4.4	A+
7	18	18	—	—	43	1.72	4.44	4.44	—	—	3.5	10.60	12.00	0.25	2.54	3.25	4.18	7.0	4.4	A+
7	18	22	—	—	47	1.58	4.06	4.96	—	—	3.5	10.60	12.00	0.25	2.54	3.25	4.18	7.0	4.4	A+
7	18	24	—	—	49	1.51	3.89	5.20	—	—	3.5	10.60	12.00	0.25	2.54	3.25	4.18	7.0	4.4	A+
9	9	9	—	—	27	3.00	3.00	3.00	—	—	3.5	9.00	10.80	0.25	2.09	2.70	4.31	6.0	4.5	A+
9	9	12	—	—	30	3.00	3.00	4.20	—	—	3.5	10.20	12.00	0.25	2.42	3.25	4.21	6.8	4.4	A+
9	9	14	—	—	32	2.98	2.98	4.64	—	—	3.5	10.60	12.00	0.25	2.54	3.25	4.18	7.0	4.4	A+
9	9	18	—	—	36	2.65	2.65	5.30	—	—	3.5	10.60	12.00	0.25	2.54	3.25	4.18	7.0	4.4	A+
9	9	22	—	—	40	2.39	2.39	5.82	—	—	3.5	10.60	12.00	0.25	2.54	3.25	4.18	7.0	4.4	A+
9	9	24	—	—	42	2.27	2.27	6.06	—	—	3.5	10.60	12.00	0.25	2.54	3.25	4.18	7.0	4.4	A+
9	12	12	—	—	33	2.90	3.85	3.85	—	—	3.5	10.60	12.00	0.25	2.54	3.25	4.18	7.0	4.4	A+
9	12	14	—	—	35	2.73	3.63	4.24	—	—	3.5	10.60	12.00	0.25	2.54	3.25	4.18	7.0	4.4	A+
9	12	18	—	—	39	2.45	3.26	4.89	—	—	3.5	10.60	12.00	0.25	2.54	3.25	4.18	7.0	4.4	A+
9	12	22	—	—	43	2.22	2.96	5.42	—	—	3.5	10.60	12.00	0.25	2.54	3.25	4.18	7.0	4.4	A+
9	12	24	—	—	45	2.12	2.83	5.65	—	—	3.5	10.60	12.00	0.25	2.54	3.25	4.18	7.0	4.4	A+
9	14	14	—	—	37	2.58	4.01	4.01	—	—	3.5	10.60	12.00	0.25	2.54	3.25	4.18	7.0	4.4	A+
9	14	18	—	—	41	2.33	3.62	4.65	—	—	3.5	10.60	12.00	0.25	2.54	3.25	4.18	7.0	4.4	A+
9	14	22	—	—	45	2.12	3.30	5.18	—	—	3.5	10.60	12.00	0.25	2.54	3.25	4.18	7.0	4.4	A+
9	14	24	—	—	47	2.03	3.16	5.41	—	—	3.5	10.60	12.00	0.25	2.54	3.25	4.18	7.0	4.4	A+
9	18	18	—	—	45	2.12	4.24	4.24	—	—	3.5	10.60	12.00	0.25	2.54	3.25	4.18	7.0	4.4	A+
9	18	22	—	—	49	1.95	3.89	4.76	—	—	3.5	10.60	12.00	0.25	2.54	3.25	4.18	7.0	4.4	A+
9	18	24	—	—	51	1.87	3.74	4.99	—	—	3.5	10.60	12.00	0.25	2.54	3.25	4.18	7.0	4.4	A+
12	12	12	—	—	36	3.53	3.53	3.53	—	—	3.5	10.60	12.00	0.25	2.54	3.25	4.18	7.0	4.4	A+
12	12	14	—	—	38	3.35	3.35	3.90	—	—	3.5	10.60	12.00	0.25	2.54	3.25	4.18	7.0	4.4	A+
12	12	18	—	—	42	3.03	3.03	4.54	—	—	3.5	10.60	12.00	0.25	2.54	3.25	4.18	7.0	4.4	A+
12	12	22	—	—	46	2.77	2.77	5.06	—	—	3.5	10.60	12.00	0.25	2.54	3.25	4.18	7.0	4.4	A+
12	12	24	—	—	48	2.65	2.65	5.30	—	—	3.5	10.60	12.00	0.25	2.54	3.25	4.18	7.0	4.4	A+
12	14	14	—	—	40	3.18	3.71	3.71	—	—	3.5	10.60	12.00	0.25	2.54	3.25	4.18	7.0	4.4	A+
12	14	18	—	—	44	2.89	3.37	4.34	—	—	3.5	10.60	12.00	0.25	2.54	3.25	4.18	7.0	4.4	A+
12	14	22	—	—	48	2.65	3.09	4.86	—	—	3.5	10.60	12.00	0.25	2.54	3.25	4.18	7.0	4.4	A+
12	14	24	—	—	50	2.54	2.97	5.09	—	—	3.5	10.60	12.00	0.25	2.54	3.25	4.18	7.0	4.4	A+
12	18	18	—	—	48	2.64	3.98	3.98	—	—	3.5	10.60	12.00	0.25	2.54	3.25	4.18	7.0	4.4	A+
12	18	22	—	—	52	2.45	3.67	4.48	—	—	3.5	10.60	12.00	0.25	2.54	3.25	4.18	7.0	4.4	A+
12	18	24	—	—	54	2.36	3.53	4.71	—	—	3.5	10.60	12.00	0.25	2.54	3.25	4.18	7.0	4.4	A+
14	14	14	—	—	42	3.53	3.53	3.53	—	—	3.5	10.60	12.00	0.25	2.54	3.25	4.18	7.0	4.4	A+
14	14	18	—	—	46	3.23	3.23	4.14	—	—	3.5	10.60	12.00	0.25	2.54	3.25	4.18	7.0	4.4	A+
14	14	22	—	—	50	2.97	2.97	4.66	—	—	3.5	10.60	12.00	0.25	2.54	3.25	4.18	7.0	4.4	A+
14	14	24	—	—	52	2.85	2.85	4.90	—	—	3.5	10.60	12.00	0.25	2.54	3.25	4.18	7.0	4.4	A+
14	18	18	—	—	50	2.96	3.82	3.82	—	—	3.5	10.60	12.00	0.25	2.54	3.25	4.18	7.0	4.4	A+
18	18	18	—	—	54	3.53	3.53	3.53	—	—	3.5	10.60	12.00	0.25	2.54	3.25	4.18	7.0	4.4	A+
7	7	7	7	—	28	2.40	2.40	2.40	2.40	—	3.5	9.60	11.20	0.25	2.17	2.87	4.42	6.5	4.6	A++
7	7	7	9	—	30	2.40	2.40	2.40	3.00	—	3.5	10.20	12.00	0.25	2.33	3.25	4.37	6.8	4.5	A+
7	7	7	12	—	33	2.25	2.25	2.25	3.85	—	3.5	10.60	12.00	0.25	2.44	3.25	4.34	7.0	4.5	A+
7	7	7	14	—	35	2.12	2.12	2.12	4.24	—	3.5	10.60	12.00	0.25	2.44	3.25	4.34	7.0	4.5	A+
7	7	7	18	—	39	1.90	1.90	1.90	4.90	—	3.5	10.60	12.00	0.25	2.44	3.25	4.34	7.0	4.5	A+
7	7	7	22	—	43	1.73	1.73	1.73	5.41	—	3.5	10.60	12.00	0.25	2.44	3.25	4.34	7.0	4.5	A+
7	7	7	24	—	45	1.65	1.65	1.65	5.65	—	3.5	10.60	12.00	0.25	2.44	3.25	4.34	7.0	4.5	A+
7	7	9	9	—	32	2.32	2.32	2.98	2.98	—	3.5	10.60	12.00	0.25	2.44	3.25	4.34	7.0	4.5	A+
7	7	9	12	—	35	2.12	2.12	2.73	3.63	—	3.5	10.60	12.00	0.25	2.44	3.25	4.34	7.0	4.5	A+
7	7	9	14	—	37	2.01	2.01	2.57	4.01	—	3.5	10.60	12.00	0.25	2.44	3.25	4.34	7.0	4.5	A+
7	7	9	18	—	41	1.81	1.81	2.33	4.65	—	3.5	10.60	12.00	0.25	2.44	3.25	4.34	7.0	4.5	A+
7	7	9	22	—	45	1.65	1.65	2.12	5.18	—	3.5	10.60	12.00	0.25	2.44	3.25	4.34	7.0	4.5	A+
7	7	9	24	—	47	1.58	1.58	2.03	5.41	—	3.5	10.60	12.00	0.25	2.44	3.25	4.34	7.0	4.5	A+
7	7	12	12	—	38	1.95	1.95	3.35	3.35	—	3.5	10.60	12.00	0.25	2.44	3.25	4.34	7.0	4.5	A+

OUTDOOR UNIT AOEG36KBTA5

Combination of indoor unit						Rated capacity for each indoor unit (kW)					Total capacity (kW)			Input power (kW)			COP (W/W)	Seasonal data		
Room					Total	Room												Pdesign (kW)	SCOP (kWh/kWh)	Energy efficiency class
1	2	3	4	5		1	2	3	4	5	Min.	Rated	Max.	Min.	Rated	Max.				
7	7	12	14	—	40	1.86	1.86	3.17	3.71	—	3.5	10.60	12.00	0.25	2.44	3.25	4.34	7.0	4.5	A+
7	7	12	18	—	44	1.69	1.69	2.88	4.34	—	3.5	10.60	12.00	0.25	2.44	3.25	4.34	7.0	4.5	A+
7	7	12	22	—	48	1.55	1.55	2.64	4.86	—	3.5	10.60	12.00	0.25	2.44	3.25	4.34	7.0	4.5	A+
7	7	12	24	—	50	1.48	1.48	2.54	5.10	—	3.5	10.60	12.00	0.25	2.44	3.25	4.34	7.0	4.5	A+
7	7	14	14	—	42	1.77	1.77	3.53	3.53	—	3.5	10.60	12.00	0.25	2.44	3.25	4.34	7.0	4.5	A+
7	7	14	18	—	46	1.61	1.61	3.23	4.15	—	3.5	10.60	12.00	0.25	2.44	3.25	4.34	7.0	4.5	A+
7	7	14	22	—	50	1.48	1.48	2.97	4.67	—	3.5	10.60	12.00	0.25	2.44	3.25	4.34	7.0	4.5	A+
7	7	14	24	—	52	1.43	1.43	2.85	4.89	—	3.5	10.60	12.00	0.25	2.44	3.25	4.34	7.0	4.5	A+
7	7	18	18	—	50	1.48	1.48	3.82	3.82	—	3.5	10.60	12.00	0.25	2.44	3.25	4.34	7.0	4.5	A+
7	9	9	9	—	34	2.17	2.81	2.81	2.81	—	3.5	10.60	12.00	0.25	2.44	3.25	4.34	7.0	4.5	A+
7	9	9	12	—	37	2.00	2.58	2.58	3.44	—	3.5	10.60	12.00	0.25	2.44	3.25	4.34	7.0	4.5	A+
7	9	9	14	—	39	1.89	2.45	2.45	3.81	—	3.5	10.60	12.00	0.25	2.44	3.25	4.34	7.0	4.5	A+
7	9	9	18	—	43	1.72	2.22	2.22	4.44	—	3.5	10.60	12.00	0.25	2.44	3.25	4.34	7.0	4.5	A+
7	9	9	22	—	47	1.58	2.03	2.03	4.96	—	3.5	10.60	12.00	0.25	2.44	3.25	4.34	7.0	4.5	A+
7	9	9	24	—	49	1.51	1.95	1.95	5.19	—	3.5	10.60	12.00	0.25	2.44	3.25	4.34	7.0	4.5	A+
7	9	12	12	—	40	1.85	2.39	3.18	3.18	—	3.5	10.60	12.00	0.25	2.44	3.25	4.34	7.0	4.5	A+
7	9	12	14	—	42	1.77	2.27	3.03	3.53	—	3.5	10.60	12.00	0.25	2.44	3.25	4.34	7.0	4.5	A+
7	9	12	18	—	46	1.61	2.07	2.77	4.15	—	3.5	10.60	12.00	0.25	2.44	3.25	4.34	7.0	4.5	A+
7	9	12	22	—	50	1.48	1.91	2.54	4.67	—	3.5	10.60	12.00	0.25	2.44	3.25	4.34	7.0	4.5	A+
7	9	12	24	—	52	1.43	1.83	2.45	4.89	—	3.5	10.60	12.00	0.25	2.44	3.25	4.34	7.0	4.5	A+
7	9	14	14	—	44	1.69	2.17	3.37	3.37	—	3.5	10.60	12.00	0.25	2.44	3.25	4.34	7.0	4.5	A+
7	9	14	18	—	48	1.54	1.99	3.09	3.98	—	3.5	10.60	12.00	0.25	2.44	3.25	4.34	7.0	4.5	A+
7	9	14	22	—	52	1.43	1.83	2.85	4.49	—	3.5	10.60	12.00	0.25	2.44	3.25	4.34	7.0	4.5	A+
7	9	14	24	—	54	1.37	1.77	2.75	4.71	—	3.5	10.60	12.00	0.25	2.44	3.25	4.34	7.0	4.5	A+
7	9	18	18	—	52	1.43	1.83	3.67	3.67	—	3.5	10.60	12.00	0.25	2.44	3.25	4.34	7.0	4.5	A+
7	12	12	12	—	43	1.72	2.96	2.96	2.96	—	3.5	10.60	12.00	0.25	2.44	3.25	4.34	7.0	4.5	A+
7	12	12	14	—	45	1.64	2.83	2.83	3.30	—	3.5	10.60	12.00	0.25	2.44	3.25	4.34	7.0	4.5	A+
7	12	12	18	—	49	1.51	2.60	2.60	3.89	—	3.5	10.60	12.00	0.25	2.44	3.25	4.34	7.0	4.5	A+
7	12	14	14	—	47	1.57	2.71	3.16	3.16	—	3.5	10.60	12.00	0.25	2.44	3.25	4.34	7.0	4.5	A+
7	12	14	18	—	51	1.45	2.49	2.91	3.75	—	3.5	10.60	12.00	0.25	2.44	3.25	4.34	7.0	4.5	A+
7	14	14	14	—	49	1.51	3.03	3.03	3.03	—	3.5	10.60	12.00	0.25	2.44	3.25	4.34	7.0	4.5	A+
7	14	14	18	—	53	1.40	2.80	2.80	3.60	—	3.5	10.60	12.00	0.25	2.44	3.25	4.34	7.0	4.5	A+
9	9	9	9	—	36	2.65	2.65	2.65	2.65	—	3.5	10.60	12.00	0.25	2.44	3.25	4.34	7.0	4.5	A+
9	9	9	12	—	39	2.45	2.45	2.45	3.25	—	3.5	10.60	12.00	0.25	2.44	3.25	4.34	7.0	4.5	A+
9	9	9	14	—	41	2.33	2.33	2.33	3.61	—	3.5	10.60	12.00	0.25	2.44	3.25	4.34	7.0	4.5	A+
9	9	9	18	—	45	2.12	2.12	2.12	4.24	—	3.5	10.60	12.00	0.25	2.44	3.25	4.34	7.0	4.5	A+
9	9	9	22	—	49	1.95	1.95	1.95	4.75	—	3.5	10.60	12.00	0.25	2.44	3.25	4.34	7.0	4.5	A+
9	9	9	24	—	51	1.87	1.87	1.87	4.99	—	3.5	10.60	12.00	0.25	2.44	3.25	4.34	7.0	4.5	A+
9	9	12	12	—	42	2.27	2.27	3.03	3.03	—	3.5	10.60	12.00	0.25	2.44	3.25	4.34	7.0	4.5	A+
9	9	12	14	—	44	2.17	2.17	2.89	3.37	—	3.5	10.60	12.00	0.25	2.44	3.25	4.34	7.0	4.5	A+
9	9	12	18	—	48	1.99	1.99	2.64	3.98	—	3.5	10.60	12.00	0.25	2.44	3.25	4.34	7.0	4.5	A+
9	9	12	22	—	52	1.83	1.83	2.45	4.49	—	3.5	10.60	12.00	0.25	2.44	3.25	4.34	7.0	4.5	A+
9	9	12	24	—	54	1.77	1.77	2.35	4.71	—	3.5	10.60	12.00	0.25	2.44	3.25	4.34	7.0	4.5	A+
9	9	14	14	—	46	2.07	2.07	3.23	3.23	—	3.5	10.60	12.00	0.25	2.44	3.25	4.34	7.0	4.5	A+
9	9	14	18	—	50	1.91	1.91	2.96	3.82	—	3.5	10.60	12.00	0.25	2.44	3.25	4.34	7.0	4.5	A+
9	9	18	18	—	54	1.77	1.77	3.53	3.53	—	3.5	10.60	12.00	0.25	2.44	3.25	4.34	7.0	4.5	A+
9	12	12	12	—	45	2.11	2.83	2.83	2.83	—	3.5	10.60	12.00	0.25	2.44	3.25	4.34	7.0	4.5	A+
9	12	12	14	—	47	2.02	2.71	2.71	3.16	—	3.5	10.60	12.00	0.25	2.44	3.25	4.34	7.0	4.5	A+
9	12	12	18	—	51	1.87	2.49	2.49	3.75	—	3.5	10.60	12.00	0.25	2.44	3.25	4.34	7.0	4.5	A+
9	12	14	14	—	49	1.94	2.60	3.03	3.03	—	3.5	10.60	12.00	0.25	2.44	3.25	4.34	7.0	4.5	A+
9	12	14	18	—	53	1.80	2.40	2.80	3.60	—	3.5	10.60	12.00	0.25	2.44	3.25	4.34	7.0	4.5	A+
9	14	14	14	—	51	1.87	2.91	2.91	2.91	—	3.5	10.60	12.00	0.25	2.44	3.25	4.34	7.0	4.5	A+
12	12	12	12	—	48	2.65	2.65	2.65	2.65	—	3.5	10.60	12.00	0.25	2.44	3.25	4.34	7.0	4.5	A+
12	12	12	14	—	50	2.54	2.54	2.54	2.98	—	3.5	10.60	12.00	0.25	2.44	3.25	4.34	7.0	4.5	A+
12	12	12	18	—	54	2.36	2.36	2.36	3.52	—	3.5	10.60	12.00	0.25	2.44	3.25	4.34	7.0	4.5	A+
12	12	14	14	—	52	2.45	2.45	2.85	2.85	—	3.5	10.60	12.00	0.25	2.44	3.25	4.34	7.0	4.5	A+
12	14	14	14	—	54	2.35	2.75	2.75	2.75	—	3.5	10.60	12.00	0.25	2.44	3.25	4.34	7.0	4.5	A+
7	7	7	7	7	35	2.12	2.12	2.12	2.12	2.12	3.5	10.60	12.00	0.25	2.36	3.25	4.50	7.0	4.6	A++
7	7	7	7	9	37	2.01	2.01	2.01	2.01	2.56	3.5	10.60	12.00	0.25	2.36	3.25	4.50	7.0	4.6	A++
7	7	7	7	12	40	1.86	1.86	1.86	1.86	3.16	3.5	10.60	12.00	0.25	2.36	3.25	4.50	7.0	4.6	A++
7	7	7	7	14	42	1.77	1.77	1.77	1.77	3.52	3.5	10.60	12.00	0.25	2.36	3.25	4.50	7.0	4.6	A++
7	7	7	7	18	46	1.61	1.61	1.61	1.61	4.16	3.5	10.60	12.00	0.25	2.36	3.25	4.50	7.0	4.6	A++
7	7	7	7	22*	50	1.48	1.48	1.48	1.48	4.68	3.5	10.60	12.00	0.25	2.36	3.25	4.50	7.0	4.6	A++
7	7	7	7	24	52	1.43	1.43	1.43	1.43	4.88	3.5	10.60	12.00	0.25	2.36	3.25	4.50	7.0	4.6	A++
7	7	7	9	9	39	1.90	1.90	1.90	2.45	2.45	3.5	10.60	12.00	0.25	2.36	3.25	4.50	7.0	4.6	A++
7	7	7	9	12	42	1.77	1.77	1.77	2.26	3.03	3.5	10.60	12.00	0.25	2.36	3.25	4.50	7.0	4.6	A++
7	7	7	9	14	44	1.69	1.69	1.69	2.16	3.37	3.5	10.60	12.00	0.25	2.36	3.25	4.50	7.0	4.6	A++
7	7	7	9	18	48	1.55	1.55	1.55	1.99	3.96	3.5	10.60	12.00	0.25	2.36	3.25	4.50	7.0	4.6	A++
7	7	7	9	22*	52	1.43	1.43	1.43	1.83	4.48	3.5	10.60	12.00	0.25	2.36	3.25	4.50	7.0	4.6	A++
7	7	7	9	24	54	1.37	1.37	1.37	1.77	4.72	3.5	10.60	12.00	0.25	2.36	3.25	4.50	7.0	4.6	A++
7	7	7	12	12	45	1.64	1.64	1.64	2.84	2.84	3.5	10.60	12.00	0.25	2.36	3.25	4.50	7.0	4.6	A++
7	7	7	12	14	47	1.58	1.58	1.58	2.70	3.16	3.5	10.60	12.00	0.25	2.36	3.25	4.50	7.0	4.6	A++
7	7	7	12	18	51	1.45	1.45	1.45	2.49	3.76	3.5	10.60	12.00	0.25	2.36	3.25	4.50	7.0	4.6	A++
7	7	7	14	14	49	1.52	1.52	1.52	3.02	3.02	3.5	10.60	12.00	0.25	2.36	3.25	4.50	7.0	4.6	A++
7	7	7	14	18	53	1.40	1.40	1.40	2.80	3.60	3.5	10.60	12.00	0.25	2.36	3.25	4.50	7.0	4.6	A++
7	7	9	9	9	41	1.82	1.82	2.32	2.32	2.32	3.5	10.60	12.00	0.25	2.36	3.25	4.50	7.0	4.6	A++
7	7	9	9	12	44	1.69	1.69	2.17	2.17	2.88	3.5	10.60	12.00	0.25	2.36	3.25	4.50	7.0	4.6	A++
7	7	9	9	14	46	1.61	1.61	2.07	2.07	3.24	3.5	10.60	12.00	0.25	2.36	3.25	4.50	7.0	4.6	A++
7	7	9	9	18	50	1.48	1.48	1.91	1.91	3.82	3.5	10.60	12.00	0.25	2.36	3.25	4.50	7.0	4.6	A++
7	7	9	9	22*	54	1.37	1.37	1.77	1.77	4.32	3.5	10.60	12.00	0.25	2.36	3.25	4.50	7.0	4.6	A++
7	7	9	12	12	47	1.58	1.58	2.02	2.71	2.71	3.5	10.60	12.00	0.25	2.36	3.25	4.50	7.0	4.6	A++
7	7	9	12	14	49	1.51	1.51	1.95	2.6	3.03	3.5	10.60	12.00	0.25	2.36	3.25	4.50	7.0	4.6	A++
7	7	9	12	18	53	1.40	1.40	1.80	2.40	3.60	3.5	10.60	12.00	0.25	2.36	3.25	4.50	7.0	4.6	A++
7	7	9	14	14	51	1.45	1.45	1.88	2.91	2.91	3.5	10.60	12.00	0.25	2.36	3.25	4.50	7.0	4.6	A++
7	7	12	12	12	50	1.49	1.49	2.54	2.54	2.54	3.5	10.60	12.00	0.25	2.36	3.25	4.50	7.0	4.6	A++
7	7	12	12	14	52	1.43	1.43	2.45	2.45	2.84	3.5	10.60	12.00	0.25	2.36	3.25	4.50	7.0	4.6	A++
7	7	12	14	14	54	1.37	1.37	2.36	2.75	2.75	3.5	10.60	12.00	0.25	2.36	3.25	4.50	7.0	4.6	A++
7	9	9	9	9	43	1.72	2.22	2.22	2.22	2.22	3.5	10.60	12.00	0.25	2.36	3.25	4.50	7.0	4.6	A++
7	9	9	9	12	46	1.61	2.07	2.07	2.07	2.78	3.5	10.60	12.00	0.25	2.36	3.25	4.50	7.0	4.6	A++

OUTDOOR UNIT
AOEG36KBTA5

Combination of indoor unit						Rated capacity for each indoor unit (kW)					Total capacity (kW)			Input power (kW)			COP (W/W)	Seasonal data		
Room					Total	Room					Min.	Rated	Max.	Min.	Rated	Max.		Pdesign (kW)	SCOP (kWh/kWh)	Energy efficiency class
1	2	3	4	5		1	2	3	4	5										
7	9	9	9	14	48	1.54	1.99	1.99	1.99	3.09	3.5	10.60	12.00	0.25	2.36	3.25	4.50	7.0	4.6	A++
7	9	9	9	18	52	1.43	1.83	1.83	1.83	3.68	3.5	10.60	12.00	0.25	2.36	3.25	4.50	7.0	4.6	A++
7	9	9	12	12	49	1.50	1.95	1.95	2.60	2.60	3.5	10.60	12.00	0.25	2.36	3.25	4.50	7.0	4.6	A++
7	9	9	12	14	51	1.45	1.87	1.87	2.49	2.92	3.5	10.60	12.00	0.25	2.36	3.25	4.50	7.0	4.6	A++
7	9	9	14	14	53	1.40	1.80	1.80	2.80	2.80	3.5	10.60	12.00	0.25	2.36	3.25	4.50	7.0	4.6	A++
7	9	12	12	12	52	1.42	1.83	2.45	2.45	2.45	3.5	10.60	12.00	0.25	2.36	3.25	4.50	7.0	4.6	A++
7	9	12	12	14	54	1.36	1.77	2.36	2.36	2.75	3.5	10.60	12.00	0.25	2.36	3.25	4.50	7.0	4.6	A++
9	9	9	9	9	45	2.12	2.12	2.12	2.12	2.12	3.5	10.60	12.00	0.25	2.36	3.25	4.50	7.0	4.6	A++
9	9	9	9	12	48	1.99	1.99	1.99	1.99	2.64	3.5	10.60	12.00	0.25	2.36	3.25	4.50	7.0	4.6	A++
9	9	9	9	14	50	1.91	1.91	1.91	1.91	2.96	3.5	10.60	12.00	0.25	2.36	3.25	4.50	7.0	4.6	A++
9	9	9	9	18	54	1.77	1.77	1.77	1.77	3.52	3.5	10.60	12.00	0.25	2.36	3.25	4.50	7.0	4.6	A++
9	9	9	12	12	51	1.88	1.88	1.88	2.48	2.48	3.5	10.60	12.00	0.25	2.36	3.25	4.50	7.0	4.6	A++
9	9	9	12	14	53	1.80	1.80	1.80	2.40	2.80	3.5	10.60	12.00	0.25	2.36	3.25	4.50	7.0	4.6	A++
9	9	12	12	12	54	1.76	1.76	2.36	2.36	2.36	3.5	10.60	12.00	0.25	2.36	3.25	4.50	7.0	4.6	A++

OUTDOOR UNIT AOEG36KBTA5

Indoor unit combination (All models other than wall-mounted type KG/KM models)

Combination of indoor unit						Rated capacity for each indoor unit (kW)					Total capacity (kW)			Input power (kW)			COP (W/W)	Seasonal data		
Room					Total	Room					Min.	Rated	Max.	Min.	Rated	Max.		Pdesign (kW)	SCOP (kWh/kWh)	Energy efficiency class
1	2	3	4	5		1	2	3	4	5										
5	22	—	—	—	27	1.67	7.33	—	—	—	3.5	9.00	10.8	0.25	2.28	2.84	3.94	6.0	4.1	A++
5	24	—	—	—	29	1.66	7.94	—	—	—	3.5	9.60	11.6	0.25	2.41	3.12	3.98	6.8	4.0	A+
7	24	—	—	—	31	2.39	8.21	—	—	—	3.5	10.60	12.0	0.25	2.66	3.26	3.98	7.0	4.0	A+
9	22	—	—	—	31	3.00	7.20	—	—	—	3.5	10.20	12.0	0.25	2.53	3.26	4.02	6.8	4.0	A+
9	24	—	—	—	33	2.89	7.71	—	—	—	3.5	10.60	12.0	0.25	2.66	3.26	3.98	7.0	4.0	A+
12	22	—	—	—	34	3.74	6.86	—	—	—	3.5	10.60	12.0	0.25	2.66	3.26	3.98	7.0	4.0	A+
12	24	—	—	—	36	3.53	7.07	—	—	—	3.5	10.60	12.0	0.25	2.66	3.26	3.98	7.0	4.0	A+
14	22	—	—	—	36	4.12	6.48	—	—	—	3.5	10.60	12.0	0.25	2.66	3.26	3.98	7.0	4.0	A+
14	24	—	—	—	38	3.91	6.69	—	—	—	3.5	10.60	12.0	0.25	2.66	3.26	3.98	7.0	4.0	A+
18	18	—	—	—	36	5.30	5.30	—	—	—	3.5	10.60	12.0	0.25	2.66	3.26	3.98	7.0	4.0	A+
18	22	—	—	—	40	4.77	5.83	—	—	—	3.5	10.60	12.0	0.25	2.66	3.26	3.98	7.0	4.0	A+
18	24	—	—	—	42	4.54	6.06	—	—	—	3.5	10.60	12.0	0.25	2.66	3.26	3.98	7.0	4.0	A+
22	22	—	—	—	44	5.30	5.30	—	—	—	3.5	10.60	12.0	0.25	2.66	3.26	3.98	7.0	4.0	A+
22	24	—	—	—	46	5.07	5.53	—	—	—	3.5	10.60	12.0	0.25	2.66	3.26	3.98	7.0	4.0	A+
24	24	—	—	—	48	5.30	5.30	—	—	—	3.5	10.60	12.0	0.25	2.66	3.26	3.98	7.0	4.0	A+
5	5	18	—	—	28	1.71	1.71	6.17	—	—	3.5	9.60	10.9	0.25	2.34	2.96	4.09	6.5	4.2	A++
5	5	22	—	—	32	1.66	1.66	7.29	—	—	3.5	10.60	12.0	0.25	2.55	3.26	4.16	7.0	4.1	A++
5	5	24	—	—	34	1.56	1.56	7.48	—	—	3.5	10.60	12.0	0.25	2.55	3.26	4.16	7.0	4.1	A++
5	7	18	—	—	30	1.70	2.38	6.12	—	—	3.5	10.20	11.6	0.25	2.43	3.26	4.19	6.8	4.1	A++
5	7	22	—	—	34	1.56	2.18	6.86	—	—	3.5	10.60	12.0	0.25	2.55	3.26	4.16	7.0	4.1	A++
5	7	24	—	—	36	1.47	2.06	7.07	—	—	3.5	10.60	12.0	0.25	2.55	3.26	4.15	7.0	4.1	A++
5	9	14	—	—	28	1.71	3.09	4.80	—	—	3.5	9.60	11.2	0.25	2.34	2.96	4.09	6.5	4.2	A++
5	9	18	—	—	32	1.66	2.98	5.96	—	—	3.5	10.60	12.0	0.25	2.55	3.26	4.16	7.0	4.1	A++
5	9	22	—	—	36	1.47	2.65	6.48	—	—	3.5	10.60	12.0	0.25	2.55	3.26	4.15	7.0	4.1	A++
5	9	24	—	—	38	1.39	2.51	6.69	—	—	3.5	10.60	12.0	0.25	2.55	3.26	4.15	7.0	4.1	A++
5	12	12	—	—	29	1.71	4.10	4.10	—	—	3.5	9.90	11.6	0.25	2.41	3.12	4.10	6.8	4.1	A++
5	12	14	—	—	31	1.71	4.10	4.79	—	—	3.5	10.60	12.0	0.25	2.55	3.26	4.16	7.0	4.1	A++
5	12	18	—	—	35	1.51	3.63	5.45	—	—	3.5	10.60	12.0	0.25	2.55	3.26	4.15	7.0	4.1	A++
5	12	22	—	—	39	1.36	3.26	5.98	—	—	3.5	10.60	12.0	0.25	2.55	3.26	4.15	7.0	4.1	A++
5	12	24	—	—	41	1.29	3.10	6.20	—	—	3.5	10.60	12.0	0.25	2.55	3.26	4.15	7.0	4.1	A++
5	14	14	—	—	33	1.61	4.50	4.50	—	—	3.5	10.60	12.0	0.25	2.55	3.26	4.16	7.0	4.1	A++
5	14	18	—	—	37	1.43	4.01	5.16	—	—	3.5	10.60	12.0	0.25	2.55	3.26	4.15	7.0	4.1	A++
5	14	22	—	—	41	1.29	3.62	5.69	—	—	3.5	10.60	12.0	0.25	2.55	3.26	4.15	7.0	4.1	A++
5	14	24	—	—	43	1.23	3.45	5.92	—	—	3.5	10.60	12.0	0.25	2.55	3.26	4.15	7.0	4.1	A++
5	18	18	—	—	41	1.29	4.65	4.65	—	—	3.5	10.60	12.0	0.25	2.55	3.26	4.15	7.0	4.1	A++
5	18	22	—	—	45	1.18	4.24	5.18	—	—	3.5	10.60	12.0	0.25	2.55	3.26	4.15	7.0	4.1	A++
5	18	24	—	—	47	1.13	4.06	5.41	—	—	3.5	10.60	12.0	0.25	2.55	3.26	4.15	7.0	4.1	A++
5	22	22	—	—	49	1.08	4.76	4.76	—	—	3.5	10.60	12.0	0.25	2.55	3.26	4.15	7.0	4.1	A++
5	22	24	—	—	51	1.04	4.57	4.99	—	—	3.5	10.60	12.0	0.25	2.55	3.26	4.15	7.0	4.1	A++
5	24	24	—	—	53	1.00	4.80	4.80	—	—	3.5	10.60	12.0	0.25	2.55	3.26	4.15	7.0	4.1	A++
7	7	14	—	—	28	2.40	2.40	4.80	—	—	3.5	9.60	11.2	0.25	2.34	2.96	4.09	6.5	4.2	A++
7	7	18	—	—	32	2.32	2.32	5.96	—	—	3.5	10.60	12.0	0.25	2.55	3.26	4.16	7.0	4.1	A++
7	7	22	—	—	36	2.06	2.06	6.48	—	—	3.5	10.60	12.0	0.25	2.55	3.26	4.15	7.0	4.1	A++
7	7	24	—	—	38	1.95	1.95	6.69	—	—	3.5	10.60	12.0	0.25	2.55	3.26	4.15	7.0	4.1	A++
7	9	12	—	—	28	2.40	3.00	4.20	—	—	3.5	9.60	11.2	0.25	2.34	2.96	4.09	6.5	4.2	A++
7	9	14	—	—	30	2.40	3.00	4.80	—	—	3.5	10.20	12.0	0.25	2.43	3.26	4.19	6.8	4.1	A++
7	9	18	—	—	34	2.18	2.81	5.61	—	—	3.5	10.60	12.0	0.25	2.55	3.26	4.16	7.0	4.1	A++
7	9	22	—	—	38	1.95	2.51	6.14	—	—	3.5	10.60	12.0	0.25	2.55	3.26	4.15	7.0	4.1	A++
7	9	24	—	—	40	1.86	2.39	6.36	—	—	3.5	10.60	12.0	0.25	2.55	3.26	4.15	7.0	4.1	A++
7	12	12	—	—	31	2.39	4.10	4.10	—	—	3.5	10.60	12.0	0.25	2.55	3.26	4.16	7.0	4.1	A++
7	12	14	—	—	33	2.25	3.85	4.50	—	—	3.5	10.60	12.0	0.25	2.55	3.26	4.16	7.0	4.1	A++
7	12	18	—	—	37	2.01	3.44	5.16	—	—	3.5	10.60	12.0	0.25	2.55	3.26	4.15	7.0	4.1	A++
7	12	22	—	—	41	1.81	3.10	5.69	—	—	3.5	10.60	12.0	0.25	2.55	3.26	4.15	7.0	4.1	A++
7	12	24	—	—	43	1.73	2.96	5.92	—	—	3.5	10.60	12.0	0.25	2.55	3.26	4.15	7.0	4.1	A++
7	14	14	—	—	35	2.12	4.24	4.24	—	—	3.5	10.60	12.0	0.25	2.55	3.26	4.15	7.0	4.1	A++
7	14	18	—	—	39	1.90	3.81	4.89	—	—	3.5	10.60	12.0	0.25	2.55	3.26	4.15	7.0	4.1	A++
7	14	22	—	—	43	1.73	3.45	5.42	—	—	3.5	10.60	12.0	0.25	2.55	3.26	4.15	7.0	4.1	A++
7	14	24	—	—	45	1.65	3.30	5.65	—	—	3.5	10.60	12.0	0.25	2.55	3.26	4.15	7.0	4.1	A++
7	18	18	—	—	43	1.73	4.44	4.44	—	—	3.5	10.60	12.0	0.25	2.55	3.26	4.15	7.0	4.1	A++
7	18	22	—	—	47	1.58	4.06	4.96	—	—	3.5	10.60	12.0	0.25	2.55	3.26	4.15	7.0	4.1	A++
7	18	24	—	—	49	1.51	3.89	5.19	—	—	3.5	10.60	12.0	0.25	2.55	3.26	4.15	7.0	4.1	A++
9	9	9	—	—	27	3.00	3.00	3.00	—	—	3.5	9.00	10.8	0.25	2.23	2.84	4.04	6.0	4.2	A++
9	9	12	—	—	30	3.00	3.00	4.20	—	—	3.5	10.20	12.0	0.25	2.43	3.26	4.19	6.8	4.1	A++
9	9	14	—	—	32	2.98	2.98	4.64	—	—	3.5	10.60	12.0	0.25	2.55	3.26	4.16	7.0	4.1	A++
9	9	18	—	—	36	2.65	2.65	5.30	—	—	3.5	10.60	12.0	0.25	2.55	3.26	4.15	7.0	4.1	A++
9	9	22	—	—	40	2.39	2.39	5.83	—	—	3.5	10.60	12.0	0.25	2.55	3.26	4.15	7.0	4.1	A++

OUTDOOR UNIT AOEG36KBTA5

Combination of indoor unit						Rated capacity for each indoor unit (kW)					Total capacity (kW)			Input power (kW)			COP (W/W)	Seasonal data		
Room					Total	Room												Pdesign (kW)	SCOP (kWh/kWh)	Energy efficiency class
1	2	3	4	5		1	2	3	4	5	Min.	Rated	Max.	Min.	Rated	Max.				
9	9	24	—	—	42	2.27	2.27	6.06	—	—	3.5	10.60	12.0	0.25	2.55	3.26	4.15	7.0	4.1	A++
9	12	12	—	—	33	2.89	3.85	3.85	—	—	3.5	10.60	12.0	0.25	2.55	3.26	4.16	7.0	4.1	A++
9	12	14	—	—	35	2.73	3.63	4.24	—	—	3.5	10.60	12.0	0.25	2.55	3.26	4.15	7.0	4.1	A++
9	12	18	—	—	39	2.45	3.26	4.89	—	—	3.5	10.60	12.0	0.25	2.55	3.26	4.15	7.0	4.1	A++
9	12	22	—	—	43	2.22	2.96	5.42	—	—	3.5	10.60	12.0	0.25	2.55	3.26	4.15	7.0	4.1	A++
9	12	24	—	—	45	2.12	2.83	5.65	—	—	3.5	10.60	12.0	0.25	2.55	3.26	4.15	7.0	4.1	A++
9	14	14	—	—	37	2.58	4.01	4.01	—	—	3.5	10.60	12.0	0.25	2.55	3.26	4.15	7.0	4.1	A++
9	14	18	—	—	41	2.33	3.62	4.65	—	—	3.5	10.60	12.0	0.25	2.55	3.26	4.15	7.0	4.1	A++
9	14	22	—	—	45	2.12	3.30	5.18	—	—	3.5	10.60	12.0	0.25	2.55	3.26	4.15	7.0	4.1	A++
9	14	24	—	—	47	2.03	3.16	5.41	—	—	3.5	10.60	12.0	0.25	2.55	3.26	4.15	7.0	4.1	A++
9	18	18	—	—	45	2.12	4.24	4.24	—	—	3.5	10.60	12.0	0.25	2.55	3.26	4.15	7.0	4.1	A++
9	18	22	—	—	49	1.95	3.89	4.76	—	—	3.5	10.60	12.0	0.25	2.55	3.26	4.15	7.0	4.1	A++
9	18	24	—	—	51	1.87	3.74	4.99	—	—	3.5	10.60	12.0	0.25	2.55	3.26	4.15	7.0	4.1	A++
12	12	12	—	—	36	3.53	3.53	3.53	—	—	3.5	10.60	12.0	0.25	2.55	3.26	4.15	7.0	4.1	A++
12	12	14	—	—	38	3.35	3.35	3.91	—	—	3.5	10.60	12.0	0.25	2.55	3.26	4.15	7.0	4.1	A++
12	12	18	—	—	42	3.03	3.03	4.54	—	—	3.5	10.60	12.0	0.25	2.55	3.26	4.15	7.0	4.1	A++
12	12	22	—	—	46	2.77	2.77	5.07	—	—	3.5	10.60	12.0	0.25	2.55	3.26	4.15	7.0	4.1	A++
12	12	24	—	—	48	2.65	2.65	5.3	—	—	3.5	10.60	12.0	0.25	2.55	3.26	4.15	7.0	4.1	A++
12	14	14	—	—	40	3.18	3.71	3.71	—	—	3.5	10.60	12.0	0.25	2.55	3.26	4.15	7.0	4.1	A++
12	14	18	—	—	44	2.89	3.37	4.34	—	—	3.5	10.60	12.0	0.25	2.55	3.26	4.15	7.0	4.1	A++
12	14	22	—	—	48	2.65	3.09	4.86	—	—	3.5	10.60	12.0	0.25	2.55	3.26	4.15	7.0	4.1	A++
12	14	24	—	—	50	2.54	2.97	5.09	—	—	3.5	10.60	12.0	0.25	2.55	3.26	4.15	7.0	4.1	A++
12	18	18	—	—	48	2.65	3.98	3.98	—	—	3.5	10.60	12.0	0.25	2.55	3.26	4.15	7.0	4.1	A++
12	18	22	—	—	52	2.45	3.67	4.48	—	—	3.5	10.60	12.0	0.25	2.55	3.26	4.15	7.0	4.1	A++
12	18	24	—	—	54	2.36	3.53	4.71	—	—	3.5	10.60	12.0	0.25	2.55	3.26	4.15	7.0	4.1	A++
14	14	14	—	—	42	3.53	3.53	3.53	—	—	3.5	10.60	12.0	0.25	2.55	3.26	4.15	7.0	4.1	A++
14	14	18	—	—	46	3.23	3.23	4.15	—	—	3.5	10.60	12.0	0.25	2.55	3.26	4.15	7.0	4.1	A++
14	14	22	—	—	50	2.97	2.97	4.66	—	—	3.5	10.60	12.0	0.25	2.55	3.26	4.15	7.0	4.1	A++
14	14	24	—	—	52	2.85	2.85	4.89	—	—	3.5	10.60	12.0	0.25	2.55	3.26	4.15	7.0	4.1	A++
14	18	18	—	—	50	2.97	3.82	3.82	—	—	3.5	10.60	12.0	0.25	2.55	3.26	4.15	7.0	4.1	A++
18	18	18	—	—	54	3.53	3.53	3.53	—	—	3.5	10.60	12.0	0.25	2.55	3.26	4.15	7.0	4.1	A++
5	5	5	12	—	27	1.67	1.67	1.67	4.00	—	3.5	9.00	10.8	0.25	2.21	2.84	4.06	6.5	4.3	A++
5	5	5	14	—	29	1.66	1.66	1.66	4.63	—	3.5	9.60	11.6	0.25	2.31	3.12	4.15	6.8	4.2	A++
5	5	5	18	—	33	1.61	1.61	1.61	5.78	—	3.5	10.60	12.0	0.25	2.45	3.26	4.32	7.0	4.2	A++
5	5	5	22	—	37	1.43	1.43	1.43	6.30	—	3.5	10.60	12.0	0.25	2.45	3.26	4.31	7.0	4.2	A++
5	5	5	24	—	39	1.36	1.36	1.36	6.52	—	3.5	10.60	12.0	0.25	2.45	3.26	4.31	7.0	4.2	A++
5	5	7	12	—	29	1.66	1.66	2.32	3.97	—	3.5	9.60	11.6	0.25	2.31	3.12	4.15	6.8	4.2	A++
5	5	7	14	—	31	1.71	1.71	2.39	4.79	—	3.5	10.60	12.0	0.25	2.40	3.26	4.40	7.0	4.2	A++
5	5	7	18	—	35	1.51	1.51	2.12	5.45	—	3.5	10.60	12.0	0.25	2.45	3.26	4.31	7.0	4.2	A++
5	5	7	22	—	39	1.36	1.36	1.90	5.98	—	3.5	10.60	12.0	0.25	2.45	3.26	4.31	7.0	4.2	A++
5	5	7	24	—	41	1.29	1.29	1.81	6.20	—	3.5	10.60	12.0	0.25	2.45	3.26	4.31	7.0	4.2	A++
5	5	9	9	—	28	1.71	1.71	3.09	3.09	—	3.5	9.60	11.2	0.25	2.26	2.96	4.24	6.5	4.3	A++
5	5	9	12	—	31	1.71	1.71	3.08	4.10	—	3.5	10.60	12.0	0.25	2.40	3.26	4.40	7.0	4.2	A++
5	5	9	14	—	33	1.61	1.61	2.89	4.50	—	3.5	10.60	12.0	0.25	2.45	3.26	4.32	7.0	4.2	A++
5	5	9	18	—	37	1.43	1.43	2.58	5.16	—	3.5	10.60	12.0	0.25	2.45	3.26	4.31	7.0	4.2	A++
5	5	9	22	—	41	1.29	1.29	2.33	5.69	—	3.5	10.60	12.0	0.25	2.45	3.26	4.31	7.0	4.2	A++
5	5	9	24	—	43	1.23	1.23	2.22	5.92	—	3.5	10.60	12.0	0.25	2.45	3.26	4.31	7.0	4.2	A++
5	5	12	12	—	34	1.56	1.56	3.74	3.74	—	3.5	10.60	12.0	0.25	2.45	3.26	4.32	7.0	4.2	A++
5	5	12	14	—	36	1.47	1.47	3.53	4.12	—	3.5	10.60	12.0	0.25	2.45	3.26	4.31	7.0	4.2	A++
5	5	12	18	—	40	1.33	1.33	3.18	4.77	—	3.5	10.60	12.0	0.25	2.45	3.26	4.31	7.0	4.2	A++
5	5	12	22	—	44	1.20	1.20	2.89	5.30	—	3.5	10.60	12.0	0.25	2.45	3.26	4.31	7.0	4.2	A++
5	5	12	24	—	46	1.15	1.15	2.77	5.53	—	3.5	10.60	12.0	0.25	2.45	3.26	4.31	7.0	4.2	A++
5	5	14	14	—	38	1.39	1.39	3.91	3.91	—	3.5	10.60	12.0	0.25	2.45	3.26	4.31	7.0	4.2	A++
5	5	14	18	—	42	1.26	1.26	3.53	4.54	—	3.5	10.60	12.0	0.25	2.45	3.26	4.31	7.0	4.2	A++
5	5	14	22	—	46	1.15	1.15	3.23	5.07	—	3.5	10.60	12.0	0.25	2.45	3.26	4.31	7.0	4.2	A++
5	5	14	24	—	48	1.10	1.10	3.09	5.30	—	3.5	10.60	12.0	0.25	2.45	3.26	4.31	7.0	4.2	A++
5	5	18	18	—	46	1.15	1.15	4.15	4.15	—	3.5	10.60	12.0	0.25	2.45	3.26	4.31	7.0	4.2	A++
5	5	18	22	—	50	1.06	1.06	3.82	4.66	—	3.5	10.60	12.0	0.25	2.45	3.26	4.31	7.0	4.2	A++
5	5	18	24	—	52	1.02	1.02	3.67	4.89	—	3.5	10.60	12.0	0.25	2.45	3.26	4.31	7.0	4.2	A++
5	7	7	9	—	28	1.71	2.40	2.40	3.09	—	3.5	9.60	11.2	0.25	2.26	2.96	4.24	7.0	4.2	A++
5	7	7	12	—	31	1.71	2.39	2.39	4.10	—	3.5	10.60	12.0	0.25	2.40	3.26	4.40	7.0	4.2	A++
5	7	7	14	—	33	1.61	2.25	2.25	4.50	—	3.5	10.60	12.0	0.25	2.45	3.26	4.32	7.0	4.2	A++
5	7	7	18	—	37	1.43	2.01	2.01	5.16	—	3.5	10.60	12.0	0.25	2.45	3.26	4.31	7.0	4.2	A++
5	7	7	22	—	41	1.29	1.81	1.81	5.69	—	3.5	10.60	12.0	0.25	2.45	3.26	4.31	7.0	4.2	A++
5	7	7	24	—	43	1.23	1.73	1.73	5.92	—	3.5	10.60	12.0	0.25	2.45	3.26	4.31	6.8	4.2	A++
5	7	9	9	—	30	1.70	2.38	3.06	3.06	—	3.5	10.20	12.0	0.25	2.34	3.26	4.35	7.0	4.2	A++
5	7	9	12	—	33	1.61	2.25	2.89	3.85	—	3.5	10.60	12.0	0.25	2.45	3.26	4.32	7.0	4.2	A++
5	7	9	14	—	35	1.51	2.12	2.73	4.24	—	3.5	10.60	12.0	0.25	2.45	3.26	4.31	7.0	4.2	A++
5	7	9	18	—	39	1.36	1.90	2.45	4.89	—	3.5	10.60	12.0	0.25	2.45	3.26	4.31	7.0	4.2	A++
5	7	9	22	—	43	1.23	1.73	2.22	5.42	—	3.5	10.60	12.0	0.25	2.45	3.26	4.31	7.0	4.2	A++
5	7	9	24	—	45	1.18	1.65	2.12	5.65	—	3.5	10.60	12.0	0.25	2.45	3.26	4.31	7.0	4.2	A++
5	7	12	12	—	36	1.47	2.06	3.53	3.53	—	3.5	10.60	12.0	0.25	2.45	3.26	4.31	7.0	4.2	A++
5	7	12	14	—	38	1.39	1.95	3.35	3.91	—	3.5	10.60	12.0	0.25	2.45	3.26	4.31	7.0	4.2	A++
5	7	12	18	—	42	1.26	1.77	3.03	4.54	—	3.5	10.60	12.0	0.25	2.45	3.26	4.31	7.0	4.2	A++
5	7	12	22	—	46	1.15	1.61	2.77	5.07	—	3.5	10.60	12.0	0.25	2.45	3.26	4.31	7.0	4.2	A++
5	7	12	24	—	48	1.10	1.55	2.65	5.30	—	3.5	10.60	12.0	0.25	2.45	3.26	4.31	7.0	4.2	A++
5	7	14	14	—	40	1.33	1.86	3.71	3.71	—	3.5	10.60	12.0	0.25	2.45	3.26	4.31	7.0	4.2	A++
5	7	14	18	—	44	1.20	1.69	3.37	4.34	—	3.5	10.60	12.0	0.25	2.45	3.26	4.31	7.0	4.2	A++
5	7	14	22	—	48	1.10	1.55	3.09	4.86	—	3.5	10.60	12.0	0.25	2.45	3.26	4.31	7.0	4.2	A++
5	7	14	24	—	50	1.06	1.48	2.97	5.09	—	3.5	10.60	12.0	0.25	2.45	3.26	4.31	7.0	4.2	A++
5	7	18	18	—	48	1.10	1.55	3.98	3.98	—	3.5	10.60	12.0	0.25	2.45	3.26	4.31	7.0	4.2	A++
5	7	18	22	—	52	1.02	1.43	3.67	4.48	—	3.5	10.60	12.0	0.25	2.45	3.26	4.31	7.0	4.2	A++
5	7	18	24	—	54	0.98	1.37	3.53	4.71	—	3.5	10.60	12.0	0.25	2.45	3.26	4.31	7.0	4.2	A++
5	9	9	9	—	32	1.66	2.98	2.98	2.98	—	3.5	10.60	12.0	0.25	2.45	3.26	4.32	7.0	4.2	A++
5	9	9	12	—	35	1.51	2.73	2.73	3.63	—	3.5	10.60	12.0	0.25	2.45	3.26	4.31	7.0	4.2	A++
5	9	9	14	—	37	1.43	2.58	2.58	4.01	—	3.5	10.60	12.0	0.25	2.45	3.26	4.31	7.0	4.2	A++
5	9	9	18	—	41	1.29	2.33	2.33	4.65	—	3.5	10.60	12.0	0.25	2.45	3.26	4.31	7.0	4.2	A++
5	9	9	22	—	45	1.18	2.12	2.12	5.18	—	3.5	10.60	12.0	0.25	2.45	3.26	4.31	7.0	4.2	A++
5	9	9	24	—	47	1.13	2.03	2.03	5.41	—	3.5	10.60	12.0	0.25	2.45	3.26	4.31	7.0	4.2	A++

OUTDOOR UNIT
AOEG36KBTA5

Combination of indoor unit						Rated capacity for each indoor unit (kW)					Total capacity (kW)			Input power (kW)			COP (W/W)	Seasonal data		
Room					Total	Room					Min.	Rated	Max.	Min.	Rated	Max.		Pdesign (kW)	SCOP (kWh/kWh)	Energy efficiency class
1	2	3	4	5		1	2	3	4	5										
5	9	12	12	—	38	1.39	2.51	3.35	3.35	—	3.5	10.60	12.0	0.25	2.45	3.26	4.31	7.0	4.2	A++
5	9	12	14	—	40	1.33	2.39	3.18	3.71	—	3.5	10.60	12.0	0.25	2.45	3.26	4.31	7.0	4.2	A++
5	9	12	18	—	44	1.20	2.17	2.89	4.34	—	3.5	10.60	12.0	0.25	2.45	3.26	4.31	7.0	4.2	A++
5	9	12	22	—	48	1.10	1.99	2.65	4.86	—	3.5	10.60	12.0	0.25	2.45	3.26	4.31	7.0	4.2	A++
5	9	12	24	—	50	1.06	1.91	2.54	5.09	—	3.5	10.60	12.0	0.25	2.45	3.26	4.31	7.0	4.2	A++
5	9	14	14	—	42	1.26	2.27	3.53	3.53	—	3.5	10.60	12.0	0.25	2.45	3.26	4.31	7.0	4.2	A++
5	9	14	18	—	46	1.15	2.07	3.23	4.15	—	3.5	10.60	12.0	0.25	2.45	3.26	4.31	7.0	4.2	A++
5	9	14	22	—	50	1.06	1.91	2.97	4.66	—	3.5	10.60	12.0	0.25	2.45	3.26	4.31	7.0	4.2	A++
5	9	14	24	—	52	1.02	1.83	2.85	4.89	—	3.5	10.60	12.0	0.25	2.45	3.26	4.31	7.0	4.2	A++
5	9	18	18	—	50	1.06	1.91	3.82	3.82	—	3.5	10.60	12.0	0.25	2.45	3.26	4.31	7.0	4.2	A++
5	9	18	22	—	54	0.98	1.77	3.53	4.32	—	3.5	10.60	12.0	0.25	2.45	3.26	4.31	7.0	4.2	A++
5	12	12	12	—	41	1.29	3.10	3.10	3.10	—	3.5	10.60	12.0	0.25	2.45	3.26	4.31	7.0	4.2	A++
5	12	12	14	—	43	1.23	2.96	2.96	3.45	—	3.5	10.60	12.0	0.25	2.45	3.26	4.31	7.0	4.2	A++
5	12	12	18	—	47	1.13	2.71	2.71	4.06	—	3.5	10.60	12.0	0.25	2.45	3.26	4.31	7.0	4.2	A++
5	12	12	22	—	51	1.04	2.49	2.49	4.57	—	3.5	10.60	12.0	0.25	2.45	3.26	4.31	7.0	4.2	A++
5	12	12	24	—	53	1.00	2.40	2.40	4.80	—	3.5	10.60	12.0	0.25	2.45	3.26	4.31	7.0	4.2	A++
5	12	14	14	—	45	1.18	2.83	3.30	3.30	—	3.5	10.60	12.0	0.25	2.45	3.26	4.31	7.0	4.2	A++
5	12	14	18	—	49	1.08	2.60	3.03	3.89	—	3.5	10.60	12.0	0.25	2.45	3.26	4.31	7.0	4.2	A++
5	12	14	22	—	53	1.00	2.40	2.80	4.40	—	3.5	10.60	12.0	0.25	2.45	3.26	4.31	7.0	4.2	A++
5	12	18	18	—	53	1.00	2.40	3.60	3.60	—	3.5	10.60	12.0	0.25	2.45	3.26	4.31	7.0	4.2	A++
5	14	14	14	—	47	1.13	3.16	3.16	3.16	—	3.5	10.60	12.0	0.25	2.45	3.26	4.31	7.0	4.2	A++
5	14	14	18	—	51	1.04	2.91	2.91	3.74	—	3.5	10.60	12.0	0.25	2.45	3.26	4.31	6.5	4.3	A++
7	7	7	7	—	28	2.40	2.40	2.40	2.40	—	3.5	9.60	11.2	0.25	2.26	2.96	4.24	6.8	4.2	A++
7	7	7	9	—	30	2.40	2.40	2.40	3.00	—	3.5	10.20	12.0	0.25	2.34	3.26	4.35	7.0	4.2	A++
7	7	7	12	—	33	2.25	2.25	2.25	3.85	—	3.5	10.60	12.0	0.25	2.45	3.26	4.32	7.0	4.2	A++
7	7	7	14	—	35	2.12	2.12	2.12	4.24	—	3.5	10.60	12.0	0.25	2.45	3.26	4.31	7.0	4.2	A++
7	7	7	18	—	39	1.90	1.90	1.90	4.89	—	3.5	10.60	12.0	0.25	2.45	3.26	4.31	7.0	4.2	A++
7	7	7	22	—	43	1.73	1.73	1.73	5.42	—	3.5	10.60	12.0	0.25	2.45	3.26	4.31	7.0	4.2	A++
7	7	7	24	—	45	1.65	1.65	1.65	5.65	—	3.5	10.60	12.0	0.25	2.45	3.26	4.31	7.0	4.2	A++
7	7	9	9	—	32	2.32	2.32	2.98	2.98	—	3.5	10.60	12.0	0.25	2.45	3.26	4.32	7.0	4.2	A++
7	7	9	12	—	35	2.12	2.12	2.73	3.63	—	3.5	10.60	12.0	0.25	2.45	3.26	4.31	7.0	4.2	A++
7	7	9	14	—	37	2.01	2.01	2.58	4.01	—	3.5	10.60	12.0	0.25	2.45	3.26	4.31	7.0	4.2	A++
7	7	9	18	—	41	1.81	1.81	2.33	4.65	—	3.5	10.60	12.0	0.25	2.45	3.26	4.31	7.0	4.2	A++
7	7	9	22	—	45	1.65	1.65	2.12	5.18	—	3.5	10.60	12.0	0.25	2.45	3.26	4.31	7.0	4.2	A++
7	7	9	24	—	47	1.58	1.58	2.03	5.41	—	3.5	10.60	12.0	0.25	2.45	3.26	4.31	7.0	4.2	A++
7	7	12	12	—	38	1.95	1.95	3.35	3.35	—	3.5	10.60	12.0	0.25	2.45	3.26	4.31	7.0	4.2	A++
7	7	12	14	—	40	1.86	1.86	3.18	3.71	—	3.5	10.60	12.0	0.25	2.45	3.26	4.31	7.0	4.2	A++
7	7	12	18	—	44	1.69	1.69	2.89	4.34	—	3.5	10.60	12.0	0.25	2.45	3.26	4.31	7.0	4.2	A++
7	7	12	22	—	48	1.55	1.55	2.65	4.86	—	3.5	10.60	12.0	0.25	2.45	3.26	4.31	7.0	4.2	A++
7	7	12	24	—	50	1.48	1.48	2.54	5.09	—	3.5	10.60	12.0	0.25	2.45	3.26	4.31	7.0	4.2	A++
7	7	14	14	—	42	1.77	1.77	3.53	3.53	—	3.5	10.60	12.0	0.25	2.45	3.26	4.31	7.0	4.2	A++
7	7	14	18	—	46	1.61	1.61	3.23	4.15	—	3.5	10.60	12.0	0.25	2.45	3.26	4.31	7.0	4.2	A++
7	7	14	22	—	50	1.48	1.48	2.97	4.66	—	3.5	10.60	12.0	0.25	2.45	3.26	4.31	7.0	4.2	A++
7	7	14	24	—	52	1.43	1.43	2.85	4.89	—	3.5	10.60	12.0	0.25	2.45	3.26	4.31	7.0	4.2	A++
7	7	18	18	—	50	1.48	1.48	3.82	3.82	—	3.5	10.60	12.0	0.25	2.45	3.26	4.31	7.0	4.2	A++
7	9	9	9	—	34	2.18	2.81	2.81	2.81	—	3.5	10.60	12.0	0.25	2.45	3.26	4.32	7.0	4.2	A++
7	9	9	12	—	37	2.01	2.58	2.58	3.44	—	3.5	10.60	12.0	0.25	2.45	3.26	4.31	7.0	4.2	A++
7	9	9	14	—	39	1.90	2.45	2.45	3.81	—	3.5	10.60	12.0	0.25	2.45	3.26	4.31	7.0	4.2	A++
7	9	9	18	—	43	1.73	2.22	2.22	4.44	—	3.5	10.60	12.0	0.25	2.45	3.26	4.31	7.0	4.2	A++
7	9	9	22	—	47	1.58	2.03	2.03	4.96	—	3.5	10.60	12.0	0.25	2.45	3.26	4.31	7.0	4.2	A++
7	9	9	24	—	49	1.51	1.95	1.95	5.19	—	3.5	10.60	12.0	0.25	2.45	3.26	4.31	7.0	4.2	A++
7	9	12	12	—	40	1.86	2.39	3.18	3.18	—	3.5	10.60	12.0	0.25	2.45	3.26	4.31	7.0	4.2	A++
7	9	12	14	—	42	1.77	2.27	3.03	3.53	—	3.5	10.60	12.0	0.25	2.45	3.26	4.31	7.0	4.2	A++
7	9	12	18	—	46	1.61	2.07	2.77	4.15	—	3.5	10.60	12.0	0.25	2.45	3.26	4.31	7.0	4.2	A++
7	9	12	22	—	50	1.48	1.91	2.54	4.66	—	3.5	10.60	12.0	0.25	2.45	3.26	4.31	7.0	4.2	A++
7	9	12	24	—	52	1.43	1.83	2.45	4.89	—	3.5	10.60	12.0	0.25	2.45	3.26	4.31	7.0	4.2	A++
7	9	14	14	—	44	1.69	2.17	3.37	3.37	—	3.5	10.60	12.0	0.25	2.45	3.26	4.31	7.0	4.2	A++
7	9	14	18	—	48	1.55	1.99	3.09	3.98	—	3.5	10.60	12.0	0.25	2.45	3.26	4.31	7.0	4.2	A++
7	9	14	22	—	52	1.43	1.83	2.85	4.48	—	3.5	10.60	12.0	0.25	2.45	3.26	4.31	7.0	4.2	A++
7	9	14	24	—	54	1.37	1.77	2.75	4.71	—	3.5	10.60	12.0	0.25	2.45	3.26	4.31	7.0	4.2	A++
7	9	18	18	—	52	1.43	1.83	3.67	3.67	—	3.5	10.60	12.0	0.25	2.45	3.26	4.31	7.0	4.2	A++
7	12	12	12	—	43	1.73	2.96	2.96	2.96	—	3.5	10.60	12.0	0.25	2.45	3.26	4.31	7.0	4.2	A++
7	12	12	14	—	45	1.65	2.83	2.83	3.30	—	3.5	10.60	12.0	0.25	2.45	3.26	4.31	7.0	4.2	A++
7	12	12	18	—	49	1.51	2.60	2.60	3.89	—	3.5	10.60	12.0	0.25	2.45	3.26	4.31	7.0	4.2	A++
7	12	14	14	—	47	1.58	2.71	3.16	3.16	—	3.5	10.60	12.0	0.25	2.45	3.26	4.31	7.0	4.2	A++
7	12	14	18	—	51	1.45	2.49	2.91	3.74	—	3.5	10.60	12.0	0.25	2.45	3.26	4.31	7.0	4.2	A++
7	14	14	14	—	49	1.51	3.03	3.03	3.03	—	3.5	10.60	12.0	0.25	2.45	3.26	4.31	7.0	4.2	A++
7	14	14	18	—	53	1.40	2.80	2.80	3.60	—	3.5	10.60	12.0	0.25	2.45	3.26	4.31	7.0	4.2	A++
9	9	9	9	—	36	2.65	2.65	2.65	2.65	—	3.5	10.60	12.0	0.25	2.45	3.26	4.31	7.0	4.2	A++
9	9	9	12	—	39	2.45	2.45	2.45	3.26	—	3.5	10.60	12.0	0.25	2.45	3.26	4.31	7.0	4.2	A++
9	9	9	14	—	41	2.33	2.33	2.33	3.62	—	3.5	10.60	12.0	0.25	2.45	3.26	4.31	7.0	4.2	A++
9	9	9	18	—	45	2.12	2.12	2.12	4.24	—	3.5	10.60	12.0	0.25	2.45	3.26	4.31	7.0	4.2	A++
9	9	9	22	—	49	1.95	1.95	1.95	4.76	—	3.5	10.60	12.0	0.25	2.45	3.26	4.31	7.0	4.2	A++
9	9	9	24	—	51	1.87	1.87	1.87	4.99	—	3.5	10.60	12.0	0.25	2.45	3.26	4.31	7.0	4.2	A++
9	9	12	12	—	42	2.27	2.27	3.03	3.03	—	3.5	10.60	12.0	0.25	2.45	3.26	4.31	7.0	4.2	A++
9	9	12	14	—	44	2.17	2.17	2.89	3.37	—	3.5	10.60	12.0	0.25	2.45	3.26	4.31	7.0	4.2	A++
9	9	12	18	—	48	1.99	1.99	2.65	3.98	—	3.5	10.60	12.0	0.25	2.45	3.26	4.31	7.0	4.2	A++
9	9	12	22	—	52	1.83	1.83	2.45	4.48	—	3.5	10.60	12.0	0.25	2.45	3.26	4.31	7.0	4.2	A++
9	9	12	24	—	54	1.77	1.77	2.36	4.71	—	3.5	10.60	12.0	0.25	2.45	3.26	4.31	7.0	4.2	A++
9	9	14	14	—	46	2.07	2.07	3.23	3.23	—	3.5	10.60	12.0	0.25	2.45	3.26	4.31	7.0	4.2	A++
9	9	14	18	—	50	1.91	1.91	2.97	3.82	—	3.5	10.60	12.0	0.25	2.45	3.26	4.31	7.0	4.2	A++
9	9	18	18	—	54	1.77	1.77	3.53	3.53	—	3.5	10.60	12.0	0.25	2.45	3.26	4.31	7.0	4.2	A++
9	12	12	12	—	45	2.12	2.83	2.83	2.83	—	3.5	10.60	12.0	0.25	2.45	3.26	4.31	7.0	4.2	A++
9	12	12	14	—	47	2.03	2.71	2.71	3.16	—	3.5	10.60	12.0	0.25	2.45	3.26	4.31	7.0	4.2	A++
9	12	12	18	—	51	1.87	2.49	2.49	3.74	—	3.5	10.60	12.0	0.25	2.45	3.26	4.31	7.0	4.2	A++
9	12	14	14	—	49	1.95	2.6	3.03	3.03	—	3.5	10.60	12.0	0.25	2.45	3.26	4.31	7.0	4.2	A++
9	12	14	18	—	53	1.80	2.40	2.80	3.60	—	3.5	10.60	12.0	0.25	2.45	3.26	4.31	7.0	4.2	A++
9	14	14	14	—	51	1.87	2.91	2.91	2.91	—	3.5	10.60	12.0	0.25	2.45	3.26	4.31	7.0	4.2	A++
12	12	12	12	—	48	2.65	2.65	2.65	2.65	—	3.5	10.60	12.0	0.25	2.45	3.26	4.31	7.0	4.2	A++

OUTDOOR UNIT
AOEG36KBTA5

Combination of indoor unit						Rated capacity for each indoor unit (kW)					Total capacity (kW)			Input power (kW)			COP (W/W)	Seasonal data		
Room					Total	Room					Min.	Rated	Max.	Min.	Rated	Max.		Pdesign (kW)	SCOP (kWh/kWh)	Energy efficiency class
1	2	3	4	5		1	2	3	4	5										
12	12	12	14	—	50	2.54	2.54	2.54	2.97	—	3.5	10.60	12.0	0.25	2.45	3.26	4.31	7.0	4.2	A++
12	12	12	18	—	54	2.36	2.36	2.36	3.53	—	3.5	10.60	12.0	0.25	2.45	3.26	4.31	7.0	4.2	A++
12	12	14	14	—	52	2.45	2.45	2.85	2.85	—	3.5	10.60	12.0	0.25	2.45	3.26	4.31	7.0	4.2	A++
12	14	14	14	—	54	2.36	2.75	2.75	2.75	—	3.5	10.60	12.0	0.25	2.45	3.26	4.31	6.5	4.4	A++
5	5	5	5	7	27	1.39	1.39	1.39	1.39	1.94	3.5	7.50	10.8	0.25	1.98	2.84	3.78	6.8	4.3	A++
5	5	5	5	9	29	1.38	1.38	1.38	1.38	2.48	3.5	8.00	11.6	0.25	2.08	3.12	3.84	7.0	4.3	A++
5	5	5	5	12	32	1.41	1.41	1.41	1.41	3.38	3.5	9.00	12.0	0.25	2.37	3.26	3.79	7.0	4.3	A++
5	5	5	5	14	34	1.40	1.40	1.40	1.40	3.91	3.5	9.50	12.0	0.25	2.37	3.26	4.00	7.0	4.3	A++
5	5	5	5	18	38	1.25	1.25	1.25	1.25	4.50	3.5	9.50	12.0	0.25	2.37	3.26	4.00	7.0	4.3	A++
5	5	5	5	22*	42	1.13	1.13	1.13	1.13	4.98	3.5	9.50	12.0	0.25	2.37	3.26	4.01	7.0	4.3	A++
5	5	5	5	24	44	1.08	1.08	1.08	1.08	5.18	3.5	9.50	12.0	0.25	2.37	3.26	4.01	6.8	4.3	A++
5	5	5	7	7	29	1.38	1.38	1.38	1.93	1.93	3.5	8.00	11.6	0.25	2.08	3.12	3.84	7.0	4.3	A++
5	5	5	7	9	31	1.45	1.45	1.45	2.03	2.61	3.5	9.00	12.0	0.25	2.18	3.26	4.13	7.0	4.3	A++
5	5	5	7	12	34	1.40	1.40	1.40	1.96	3.35	3.5	9.50	12.0	0.25	2.37	3.26	4.00	7.0	4.3	A++
5	5	5	7	14	36	1.32	1.32	1.32	1.85	3.69	3.5	9.50	12.0	0.25	2.37	3.26	4.00	7.0	4.3	A++
5	5	5	7	18	40	1.19	1.19	1.19	1.66	4.28	3.5	9.50	12.0	0.25	2.37	3.26	4.01	7.0	4.3	A++
5	5	5	7	22*	44	1.08	1.08	1.08	1.51	4.75	3.5	9.50	12.0	0.25	2.37	3.26	4.01	7.0	4.3	A++
5	5	5	7	24	46	1.03	1.03	1.03	1.45	4.96	3.5	9.50	12.0	0.25	2.37	3.26	4.01	7.0	4.3	A++
5	5	5	9	9	33	1.44	1.44	1.44	2.59	2.59	3.5	9.50	12.0	0.25	2.37	3.26	4.00	7.0	4.3	A++
5	5	5	9	12	36	1.32	1.32	1.32	2.38	3.17	3.5	9.50	12.0	0.25	2.37	3.26	4.00	7.0	4.3	A++
5	5	5	9	14	38	1.25	1.25	1.25	2.25	3.50	3.5	9.50	12.0	0.25	2.37	3.26	4.00	7.0	4.3	A++
5	5	5	9	18	42	1.13	1.13	1.13	2.04	4.07	3.5	9.50	12.0	0.25	2.37	3.26	4.01	7.0	4.3	A++
5	5	5	9	22*	46	1.03	1.03	1.03	1.86	4.54	3.5	9.50	12.0	0.25	2.37	3.26	4.01	7.0	4.3	A++
5	5	5	9	24	48	0.99	0.99	0.99	1.78	4.75	3.5	9.50	12.0	0.25	2.37	3.26	4.01	7.0	4.3	A++
5	5	5	12	12	39	1.22	1.22	1.22	2.92	2.92	3.5	9.50	12.0	0.25	2.37	3.26	4.01	7.0	4.3	A++
5	5	5	12	14	41	1.16	1.16	1.16	2.78	3.24	3.5	9.50	12.0	0.25	2.37	3.26	4.01	7.0	4.3	A++
5	5	5	12	18	45	1.06	1.06	1.06	2.53	3.80	3.5	9.50	12.0	0.25	2.37	3.26	4.01	7.0	4.3	A++
5	5	5	12	22*	49	0.97	0.97	0.97	2.33	4.27	3.5	9.50	12.0	0.25	2.37	3.26	4.01	7.0	4.3	A++
5	5	5	12	24	51	0.93	0.93	0.93	2.24	4.47	3.5	9.50	12.0	0.25	2.37	3.26	4.01	7.0	4.3	A++
5	5	5	14	14	43	1.10	1.10	1.10	3.09	3.09	3.5	9.50	12.0	0.25	2.37	3.26	4.01	7.0	4.3	A++
5	5	5	14	18	47	1.01	1.01	1.01	2.83	3.64	3.5	9.50	12.0	0.25	2.37	3.26	4.01	7.0	4.3	A++
5	5	5	14	22*	51	0.93	0.93	0.93	2.61	4.10	3.5	9.50	12.0	0.25	2.37	3.26	4.01	7.0	4.3	A++
5	5	5	14	24	53	0.90	0.90	0.90	2.51	4.30	3.5	9.50	12.0	0.25	2.37	3.26	4.01	7.0	4.3	A++
5	5	5	18	18	51	0.93	0.93	0.93	3.35	3.35	3.5	9.50	12.0	0.25	2.37	3.26	4.01	7.0	4.2	A++
5	5	7	7	7	31	1.45	1.45	2.03	2.03	2.03	3.5	9.00	12.0	0.25	2.18	3.26	4.13	7.0	4.3	A++
5	5	7	7	9	33	1.44	1.44	2.02	2.02	2.59	3.5	9.50	12.0	0.25	2.37	3.26	4.00	7.0	4.3	A++
5	5	7	7	12	36	1.32	1.32	1.85	1.85	3.17	3.5	9.50	12.0	0.25	2.37	3.26	4.00	7.0	4.3	A++
5	5	7	7	14	38	1.25	1.25	1.75	1.75	3.50	3.5	9.50	12.0	0.25	2.37	3.26	4.00	7.0	4.3	A++
5	5	7	7	18	42	1.13	1.13	1.58	1.58	4.07	3.5	9.50	12.0	0.25	2.37	3.26	4.01	7.0	4.3	A++
5	5	7	7	22*	46	1.03	1.03	1.45	1.45	4.54	3.5	9.50	12.0	0.25	2.37	3.26	4.01	7.0	4.3	A++
5	5	7	7	24	48	0.99	0.99	1.39	1.39	4.75	3.5	9.50	12.0	0.25	2.37	3.26	4.01	7.0	4.3	A++
5	5	7	9	9	35	1.36	1.36	1.90	2.44	2.44	3.5	9.50	12.0	0.25	2.37	3.26	4.01	7.0	4.3	A++
5	5	7	9	12	38	1.25	1.25	1.75	2.25	3.00	3.5	9.50	12.0	0.25	2.37	3.26	4.00	7.0	4.3	A++
5	5	7	9	14	40	1.19	1.19	1.66	2.14	3.33	3.5	9.50	12.0	0.25	2.37	3.26	4.01	7.0	4.3	A++
5	5	7	9	18	44	1.08	1.08	1.51	1.94	3.89	3.5	9.50	12.0	0.25	2.37	3.26	4.01	7.0	4.3	A++
5	5	7	9	22*	48	0.99	0.99	1.39	1.78	4.35	3.5	9.50	12.0	0.25	2.37	3.26	4.01	7.0	4.3	A++
5	5	7	9	24	50	0.95	0.95	1.33	1.71	4.56	3.5	9.50	12.0	0.25	2.37	3.26	4.01	7.0	4.3	A++
5	5	7	12	12	41	1.16	1.16	1.62	2.78	2.78	3.5	9.50	12.0	0.25	2.37	3.26	4.01	7.0	4.3	A++
5	5	7	12	14	43	1.10	1.10	1.55	2.65	3.09	3.5	9.50	12.0	0.25	2.37	3.26	4.01	7.0	4.3	A++
5	5	7	12	18	47	1.01	1.01	1.41	2.43	3.64	3.5	9.50	12.0	0.25	2.37	3.26	4.01	7.0	4.3	A++
5	5	7	12	22*	51	0.93	0.93	1.30	2.24	4.10	3.5	9.50	12.0	0.25	2.37	3.26	4.01	7.0	4.3	A++
5	5	7	12	24	53	0.90	0.90	1.25	2.15	4.30	3.5	9.50	12.0	0.25	2.37	3.26	4.01	7.0	4.3	A++
5	5	7	14	14	45	1.06	1.06	1.48	2.96	2.96	3.5	9.50	12.0	0.25	2.37	3.26	4.01	7.0	4.3	A++
5	5	7	14	18	49	0.97	0.97	1.36	2.71	3.49	3.5	9.50	12.0	0.25	2.37	3.26	4.01	7.0	4.3	A++
5	5	7	14	22*	53	0.90	0.90	1.25	2.51	3.94	3.5	9.50	12.0	0.25	2.37	3.26	4.01	7.0	4.3	A++
5	5	7	18	18	53	0.90	0.90	1.25	3.23	3.23	3.5	9.50	12.0	0.25	2.37	3.26	4.01	7.0	4.3	A++
5	5	9	9	9	37	1.28	1.28	2.31	2.31	2.31	3.5	9.50	12.0	0.25	2.37	3.26	4.01	7.0	4.3	A++
5	5	9	9	12	40	1.19	1.19	2.14	2.14	2.85	3.5	9.50	12.0	0.25	2.37	3.26	4.01	7.0	4.3	A++
5	5	9	9	14	42	1.13	1.13	2.04	2.04	3.17	3.5	9.50	12.0	0.25	2.37	3.26	4.01	7.0	4.3	A++
5	5	9	9	18	46	1.03	1.03	1.86	1.86	3.72	3.5	9.50	12.0	0.25	2.37	3.26	4.01	7.0	4.3	A++
5	5	9	9	22*	50	0.95	0.95	1.71	1.71	4.18	3.5	9.50	12.0	0.25	2.37	3.26	4.01	7.0	4.3	A++
5	5	9	9	24	52	0.91	0.91	1.64	1.64	4.38	3.5	9.50	12.0	0.25	2.37	3.26	4.01	7.0	4.3	A++
5	5	9	12	12	43	1.10	1.10	1.99	2.65	2.65	3.5	9.50	12.0	0.25	2.37	3.26	4.01	7.0	4.3	A++
5	5	9	12	14	45	1.06	1.06	1.90	2.53	2.96	3.5	9.50	12.0	0.25	2.37	3.26	4.01	7.0	4.3	A++
5	5	9	12	18	49	0.97	0.97	1.74	2.33	3.49	3.5	9.50	12.0	0.25	2.37	3.26	4.01	7.0	4.3	A++
5	5	9	12	22*	53	0.90	0.90	1.61	2.15	3.94	3.5	9.50	12.0	0.25	2.37	3.26	4.01	7.0	4.3	A++
5	5	9	14	14	47	1.01	1.01	1.82	2.83	2.83	3.5	9.50	12.0	0.25	2.37	3.26	4.01	7.0	4.3	A++
5	5	9	14	18	51	0.93	0.93	1.68	2.61	3.35	3.5	9.50	12.0	0.25	2.37	3.26	4.01	7.0	4.3	A++
5	5	12	12	12	46	1.03	1.03	2.48	2.48	2.48	3.5	9.50	12.0	0.25	2.37	3.26	4.01	7.0	4.3	A++
5	5	12	12	14	48	0.99	0.99	2.38	2.38	2.77	3.5	9.50	12.0	0.25	2.37	3.26	4.01	7.0	4.3	A++
5	5	12	12	18	52	0.91	0.91	2.19	2.19	3.29	3.5	9.50	12.0	0.25	2.37	3.26	4.01	7.0	4.3	A++
5	5	12	14	14	50	0.95	0.95	2.28	2.66	2.66	3.5	9.50	12.0	0.25	2.37	3.26	4.01	7.0	4.3	A++
5	5	12	14	18	54	0.88	0.88	2.11	2.46	3.17	3.5	9.50	12.0	0.25	2.37	3.26	4.01	7.0	4.3	A++
5	5	14	14	14	52	0.91	0.91	2.56	2.56	2.56	3.5	9.50	12.0	0.25	2.37	3.26	4.01	7.0	4.3	A++
5	7	7	7	7	33	1.44	2.02	2.02	2.02	2.02	3.5	9.50	12.0	0.25	2.37	3.26	4.00	7.0	4.3	A++
5	7	7	7	9	35	1.36	1.90	1.90	1.90	2.44	3.5	9.50	12.0	0.25	2.37	3.26	4.01	7.0	4.3	A++
5	7	7	7	12	38	1.25	1.75	1.75	1.75	3.00	3.5	9.50	12.0	0.25	2.37	3.26	4.00	7.0	4.3	A++
5	7	7	7	14	40	1.19	1.66	1.66	1.66	3.33	3.5	9.50	12.0	0.25	2.37	3.26	4.01	7.0	4.3	A++
5	7	7	7	18	44	1.08	1.51	1.51	1.51	3.89	3.5	9.50	12.0	0.25	2.37	3.26	4.01	7.0	4.3	A++
5	7	7	7	22*	48	0.99	1.39	1.39	1.39	4.35	3.5	9.50	12.0	0.25	2.37	3.26	4.01	7.0	4.3	A++
5	7	7	7	24	50	0.95	1.33	1.33	1.33	4.56	3.5	9.50	12.0	0.25	2.37	3.26	4.01	7.0	4.3	A++
5	7	7	9	9	37	1.28	1.80	1.80	2.31	2.31	3.5	9.50	12.0	0.25	2.37	3.26	4.01	7.0	4.3	A++
5	7	7	9	12	40	1.19	1.66	1.66	2.14	2.85	3.5	9.50	12.0	0.25	2.37	3.26	4.01	7.0	4.3	A++
5	7	7	9	14	42	1.13	1.58	1.58	2.04	3.17	3.5	9.50	12.0	0.25	2.37	3.26	4.01	7.0	4.3	A++
5	7	7	9	18	46	1.03	1.45	1.45	1.86	3.72	3.5	9.50	12.0	0.25	2.37	3.26	4.01	7.0	4.3	A++
5	7	7	9	22*	50	0.95	1.33	1.33	1.71	4.18	3.5	9.50	12.0	0.25	2.37	3.26	4.01	7.0	4.3	A++
5	7	7	9	24	52	0.91	1.28	1.28	1.64	4.38	3.5	9.50	12.0	0.25	2.37	3.26	4.01	7.0	4.3	A++
5	7	7	12	12	43	1.10	1.55	1.55	2.65	2.65	3.5	9.50	12.0	0.25	2.37	3.26	4.01	7.0	4.3	A++
5	7	7	12	14	45	1.06	1.48	1.48	2.53	2.96	3.5	9.50	12.0	0.25	2.37	3.26	4.01	7.0	4.3	A++

OUTDOOR UNIT
AOEG36KBTA5

Combination of indoor unit						Rated capacity for each indoor unit (kW)					Total capacity (kW)			Input power (kW)			COP (W/W)	Seasonal data		
Room					Total	Room														
1	2	3	4	5		1	2	3	4	5	Min.	Rated	Max.	Min.	Rated	Max.		Pdesign (kW)	SCOP (kWh/kWh)	Energy efficiency class
5	7	7	12	18	49	0.97	1.36	1.36	2.33	3.49	3.5	9.50	12.0	0.25	2.37	3.26	4.01	7.0	4.3	A++
5	7	7	12	22*	53	0.90	1.25	1.25	2.15	3.94	3.5	9.50	12.0	0.25	2.37	3.26	4.01	7.0	4.3	A++
5	7	7	14	14	47	1.01	1.41	1.41	2.83	2.83	3.5	9.50	12.0	0.25	2.37	3.26	4.01	7.0	4.3	A++
5	7	7	14	18	51	0.93	1.30	1.30	2.61	3.35	3.5	9.50	12.0	0.25	2.37	3.26	4.01	7.0	4.3	A++
5	7	9	9	9	39	1.22	1.71	2.19	2.19	2.19	3.5	9.50	12.0	0.25	2.37	3.26	4.01	7.0	4.3	A++
5	7	9	9	12	42	1.13	1.58	2.04	2.04	2.71	3.5	9.50	12.0	0.25	2.37	3.26	4.01	7.0	4.3	A++
5	7	9	9	14	44	1.08	1.51	1.94	1.94	3.02	3.5	9.50	12.0	0.25	2.37	3.26	4.01	7.0	4.3	A++
5	7	9	9	18	48	0.99	1.39	1.78	1.78	3.56	3.5	9.50	12.0	0.25	2.37	3.26	4.01	7.0	4.3	A++
5	7	9	9	22*	52	0.91	1.28	1.64	1.64	4.02	3.5	9.50	12.0	0.25	2.37	3.26	4.01	7.0	4.3	A++
5	7	9	9	24	54	0.88	1.23	1.58	1.58	4.22	3.5	9.50	12.0	0.25	2.37	3.26	4.01	7.0	4.3	A++
5	7	9	12	12	45	1.06	1.48	1.9	2.53	2.53	3.5	9.50	12.0	0.25	2.37	3.26	4.01	7.0	4.3	A++
5	7	9	12	14	47	1.01	1.41	1.82	2.43	2.83	3.5	9.50	12.0	0.25	2.37	3.26	4.01	7.0	4.3	A++
5	7	9	12	18	51	0.93	1.30	1.68	2.24	3.35	3.5	9.50	12.0	0.25	2.37	3.26	4.01	7.0	4.3	A++
5	7	9	14	14	49	0.97	1.36	1.74	2.71	2.71	3.5	9.50	12.0	0.25	2.37	3.26	4.01	7.0	4.3	A++
5	7	9	14	18	53	0.90	1.25	1.61	2.51	3.23	3.5	9.50	12.0	0.25	2.37	3.26	4.01	7.0	4.3	A++
5	7	12	12	12	48	0.99	1.39	2.38	2.38	2.38	3.5	9.50	12.0	0.25	2.37	3.26	4.01	7.0	4.3	A++
5	7	12	12	14	50	0.95	1.33	2.28	2.28	2.66	3.5	9.50	12.0	0.25	2.37	3.26	4.01	7.0	4.3	A++
5	7	12	12	18	54	0.88	1.23	2.11	2.11	3.17	3.5	9.50	12.0	0.25	2.37	3.26	4.01	7.0	4.3	A++
5	7	12	14	14	52	0.91	1.28	2.19	2.56	2.56	3.5	9.50	12.0	0.25	2.37	3.26	4.01	7.0	4.3	A++
5	7	14	14	14	54	0.88	1.23	2.46	2.46	2.46	3.5	9.50	12.0	0.25	2.37	3.26	4.01	7.0	4.3	A++
5	9	9	9	9	41	1.16	2.09	2.09	2.09	2.09	3.5	9.50	12.0	0.25	2.37	3.26	4.01	7.0	4.3	A++
5	9	9	9	12	44	1.08	1.94	1.94	1.94	2.59	3.5	9.50	12.0	0.25	2.37	3.26	4.01	7.0	4.3	A++
5	9	9	9	14	46	1.03	1.86	1.86	1.86	2.89	3.5	9.50	12.0	0.25	2.37	3.26	4.01	7.0	4.3	A++
5	9	9	9	18	50	0.95	1.71	1.71	1.71	3.42	3.5	9.50	12.0	0.25	2.37	3.26	4.01	7.0	4.3	A++
5	9	9	9	22*	54	0.88	1.58	1.58	1.58	3.87	3.5	9.50	12.0	0.25	2.37	3.26	4.01	7.0	4.3	A++
5	9	9	12	12	47	1.01	1.82	1.82	2.43	2.43	3.5	9.50	12.0	0.25	2.37	3.26	4.01	7.0	4.3	A++
5	9	9	12	14	49	0.97	1.74	1.74	2.33	2.71	3.5	9.50	12.0	0.25	2.37	3.26	4.01	7.0	4.3	A++
5	9	9	12	18	53	0.90	1.61	1.61	2.15	3.23	3.5	9.50	12.0	0.25	2.37	3.26	4.01	7.0	4.3	A++
5	9	9	14	14	51	0.93	1.68	1.68	2.61	2.61	3.5	9.50	12.0	0.25	2.37	3.26	4.01	7.0	4.3	A++
5	9	12	12	12	50	0.95	1.71	2.28	2.28	2.28	3.5	9.50	12.0	0.25	2.37	3.26	4.01	7.0	4.3	A++
5	9	12	12	14	52	0.91	1.64	2.19	2.19	2.56	3.5	9.50	12.0	0.25	2.37	3.26	4.01	7.0	4.3	A++
5	9	12	14	14	54	0.88	1.58	2.11	2.46	2.46	3.5	9.50	12.0	0.25	2.37	3.26	4.01	7.0	4.3	A++
5	12	12	12	12	53	0.90	2.15	2.15	2.15	2.15	3.5	9.50	12.0	0.25	2.37	3.26	4.01	7.0	4.3	A++
7	7	7	7	7	35	2.12	2.12	2.12	2.12	2.12	3.5	10.60	12.0	0.25	2.37	3.26	4.47	7.0	4.3	A++
7	7	7	7	9	37	2.01	2.01	2.01	2.01	2.58	3.5	10.60	12.0	0.25	2.37	3.26	4.47	7.0	4.3	A++
7	7	7	7	12	40	1.86	1.86	1.86	1.86	3.18	3.5	10.60	12.0	0.25	2.37	3.26	4.47	7.0	4.3	A++
7	7	7	7	14	42	1.77	1.77	1.77	1.77	3.53	3.5	10.60	12.0	0.25	2.37	3.26	4.47	7.0	4.3	A++
7	7	7	7	18	46	1.61	1.61	1.61	1.61	4.15	3.5	10.60	12.0	0.25	2.37	3.26	4.47	7.0	4.3	A++
7	7	7	7	22*	50	1.48	1.48	1.48	1.48	4.66	3.5	10.60	12.0	0.25	2.37	3.26	4.47	7.0	4.3	A++
7	7	7	7	24	52	1.43	1.43	1.43	1.43	4.89	3.5	10.60	12.0	0.25	2.37	3.26	4.47	7.0	4.3	A++
7	7	7	9	9	39	1.90	1.90	1.90	2.45	2.45	3.5	10.60	12.0	0.25	2.37	3.26	4.47	7.0	4.3	A++
7	7	7	9	12	42	1.77	1.77	1.77	2.27	3.03	3.5	10.60	12.0	0.25	2.37	3.26	4.47	7.0	4.3	A++
7	7	7	9	14	44	1.69	1.69	1.69	2.17	3.37	3.5	10.60	12.0	0.25	2.37	3.26	4.47	7.0	4.3	A++
7	7	7	9	18	48	1.55	1.55	1.55	1.99	3.98	3.5	10.60	12.0	0.25	2.37	3.26	4.47	7.0	4.3	A++
7	7	7	9	22*	52	1.43	1.43	1.43	1.83	4.48	3.5	10.60	12.0	0.25	2.37	3.26	4.47	7.0	4.3	A++
7	7	7	9	24	54	1.37	1.37	1.37	1.77	4.71	3.5	10.60	12.0	0.25	2.37	3.26	4.47	7.0	4.3	A++
7	7	7	12	12	45	1.65	1.65	1.65	2.83	2.83	3.5	10.60	12.0	0.25	2.37	3.26	4.47	7.0	4.3	A++
7	7	7	12	14	47	1.58	1.58	1.58	2.71	3.16	3.5	10.60	12.0	0.25	2.37	3.26	4.47	7.0	4.3	A++
7	7	7	12	18	51	1.45	1.45	1.45	2.49	3.74	3.5	10.60	12.0	0.25	2.37	3.26	4.47	7.0	4.3	A++
7	7	7	14	14	49	1.51	1.51	1.51	3.03	3.03	3.5	10.60	12.0	0.25	2.37	3.26	4.47	7.0	4.3	A++
7	7	7	14	18	53	1.40	1.40	1.40	2.80	3.60	3.5	10.60	12.0	0.25	2.37	3.26	4.47	7.0	4.3	A++
7	7	9	9	9	41	1.81	1.81	2.33	2.33	2.33	3.5	10.60	12.0	0.25	2.37	3.26	4.47	7.0	4.3	A++
7	7	9	9	12	44	1.69	1.69	2.17	2.17	2.89	3.5	10.60	12.0	0.25	2.37	3.26	4.47	7.0	4.3	A++
7	7	9	9	14	46	1.61	1.61	2.07	2.07	3.23	3.5	10.60	12.0	0.25	2.37	3.26	4.47	7.0	4.3	A++
7	7	9	9	18	50	1.48	1.48	1.91	1.91	3.82	3.5	10.60	12.0	0.25	2.37	3.26	4.47	7.0	4.3	A++
7	7	9	9	22*	54	1.37	1.37	1.77	1.77	4.32	3.5	10.60	12.0	0.25	2.37	3.26	4.47	7.0	4.3	A++
7	7	9	12	12	47	1.58	1.58	2.03	2.71	2.71	3.5	10.60	12.0	0.25	2.37	3.26	4.47	7.0	4.3	A++
7	7	9	12	14	49	1.51	1.51	1.95	2.60	3.03	3.5	10.60	12.0	0.25	2.37	3.26	4.47	7.0	4.3	A++
7	7	9	12	18	53	1.40	1.40	1.80	2.40	3.60	3.5	10.60	12.0	0.25	2.37	3.26	4.47	7.0	4.3	A++
7	7	9	14	14	51	1.45	1.45	1.87	2.91	2.91	3.5	10.60	12.0	0.25	2.37	3.26	4.47	7.0	4.3	A++
7	7	12	12	12	50	1.48	1.48	2.54	2.54	2.54	3.5	10.60	12.0	0.25	2.37	3.26	4.47	7.0	4.3	A++
7	7	12	12	14	52	1.43	1.43	2.45	2.45	2.85	3.5	10.60	12.0	0.25	2.37	3.26	4.47	7.0	4.3	A++
7	7	12	14	14	54	1.37	1.37	2.36	2.75	2.75	3.5	10.60	12.0	0.25	2.37	3.26	4.47	7.0	4.3	A++
7	9	9	9	9	43	1.73	2.22	2.22	2.22	2.22	3.5	10.60	12.0	0.25	2.37	3.26	4.47	7.0	4.3	A++
7	9	9	9	12	46	1.61	2.07	2.07	2.07	2.77	3.5	10.60	12.0	0.25	2.37	3.26	4.47	7.0	4.3	A++
7	9	9	9	14	48	1.55	1.99	1.99	1.99	3.09	3.5	10.60	12.0	0.25	2.37	3.26	4.47	7.0	4.3	A++
7	9	9	9	18	52	1.43	1.83	1.83	1.83	3.67	3.5	10.60	12.0	0.25	2.37	3.26	4.47	7.0	4.3	A++
7	9	9	12	12	49	1.51	1.95	1.95	2.60	2.60	3.5	10.60	12.0	0.25	2.37	3.26	4.47	7.0	4.3	A++
7	9	9	12	14	51	1.45	1.87	1.87	2.49	2.91	3.5	10.60	12.0	0.25	2.37	3.26	4.47	7.0	4.3	A++
7	9	9	14	14	53	1.40	1.80	1.80	2.80	2.80	3.5	10.60	12.0	0.25	2.37	3.26	4.47	7.0	4.3	A++
7	9	12	12	12	52	1.43	1.83	2.45	2.45	2.45	3.5	10.60	12.0	0.25	2.37	3.26	4.47	7.0	4.3	A++
7	9	12	12	14	54	1.37	1.77	2.36	2.36	2.75	3.5	10.60	12.0	0.25	2.37	3.26	4.47	7.0	4.3	A++
9	9	9	9	9	45	2.12	2.12	2.12	2.12	2.12	3.5	10.60	12.0	0.25	2.37	3.26	4.47	7.0	4.3	A++
9	9	9	9	12	48	1.99	1.99	1.99	1.99	2.65	3.5	10.60	12.0	0.25	2.37	3.26	4.47	7.0	4.3	A++
9	9	9	9	14	50	1.91	1.91	1.91	1.91	2.97	3.5	10.60	12.0	0.25	2.37	3.26	4.47	7.0	4.3	A++
9	9	9	9	18	54	1.77	1.77	1.77	1.77	3.53	3.5	10.60	12.0	0.25	2.37	3.26	4.47	7.0	4.3	A++
9	9	9	12	12	51	1.87	1.87	1.87	2.49	2.49	3.5	10.60	12.0	0.25	2.37	3.26	4.47	7.0	4.3	A++
9	9	9	12	14	53	1.80	1.80	1.80	2.40	2.80	3.5	10.60	12.0	0.25	2.37	3.26	4.47	7.0	4.3	A++
9	9	12	12	12	54	1.77	1.77	2.36	2.36	2.36	3.5	10.60	12.0	0.25	2.37	3.26	4.47	7.0	4.3	A++

OUTDOOR UNIT
AOEG36KBTA5

NOTES:

- 5: 5,000 Btu/h, 7: 7,000 Btu/h, 9: 9,000 Btu/h, 12: 12,000 Btu/h, 14: 14,000 Btu/h, 18: 18,000 Btu/h, 22: 22,000 Btu/h, 24: 24,000 Btu/h
- Values mentioned in the table are based on the following conditions:
  - Power source of specifications: 230 V
  - Pipe length: 5 m, Height difference: 0 m (Outdoor unit—Indoor unit)
  - Heating: Indoor temperature of 20 °CDB, and outdoor temperature of 7 °CDB/6 °CWB.
- 2 or more indoor units should be connected.
- The total ability of connected a indoor unit is from 27,000 Btu up to 54,000 Btu.
- *: As for the 22 model, wall-mounted type indoor unit is only connectable.

OUTDOOR UNIT
AOEG36KBTA5

6-2. Cooling capacity

NOTE: Values mentioned in the table are calculated based on the maximum capacity.

■ Model: AOEG36KBTA5

Indoor unit connecting capacity	Outdoor temperature	Indoor temperature											
		18.0 °CDB		21.0 °CDB		23.0 °CDB		27.0 °CDB		29.0 °CDB		32.0 °CDB	
		12.0 °CWB		15.0 °CWB		16.0 °CWB		19.0 °CWB		21.0 °CWB		23.0 °CWB	
kBtu/h	°CDB	TC	IP	TC	IP	TC	IP	TC	IP	TC	IP	TC	IP
54	-10.0	8.6	2.39	9.7	2.43	10.3	2.45	11.0	2.48	11.8	2.51	12.1	2.52
	0.0	8.6	2.15	9.7	2.18	10.3	2.20	11.0	2.23	11.8	2.25	12.1	2.26
	5.0	8.6	2.00	9.7	2.04	10.3	2.05	11.0	2.08	11.8	2.10	12.1	2.11
	10.0	8.6	1.94	9.7	1.97	10.3	1.99	11.0	2.01	11.8	2.03	12.1	2.05
	15.0	8.6	2.04	9.7	2.08	10.3	2.10	11.0	2.12	11.8	2.14	12.1	2.15
	20.0	8.6	2.03	9.7	2.07	10.3	2.08	11.0	2.11	11.8	2.13	12.1	2.14
	25.0	8.6	2.30	9.7	2.34	10.3	2.36	11.0	2.38	11.8	2.41	12.1	2.42
	30.0	8.6	2.76	9.7	2.81	10.3	2.83	11.0	2.87	11.8	2.90	12.1	2.91
	35.0	8.6	3.34	9.7	3.39	10.3	3.42	11.0	3.46	11.8	3.50	12.1	3.52
	40.0	6.4	2.48	7.2	2.53	7.6	2.55	8.2	2.58	8.7	2.61	9.0	2.62
	46.0	4.2	1.63	4.7	1.66	5.0	1.67	5.3	1.69	5.7	1.71	5.9	1.72
53	-10.0	8.6	2.39	9.7	2.43	10.3	2.45	11.0	2.48	11.8	2.51	12.1	2.52
	0.0	8.6	2.15	9.7	2.18	10.3	2.20	11.0	2.23	11.8	2.25	12.1	2.26
	5.0	8.6	2.00	9.7	2.04	10.3	2.05	11.0	2.08	11.8	2.10	12.1	2.11
	10.0	8.6	1.94	9.7	1.97	10.3	1.99	11.0	2.01	11.8	2.03	12.1	2.05
	15.0	8.6	2.04	9.7	2.08	10.3	2.10	11.0	2.12	11.8	2.14	12.1	2.15
	20.0	8.6	2.03	9.7	2.07	10.3	2.08	11.0	2.11	11.8	2.13	12.1	2.14
	25.0	8.6	2.30	9.7	2.34	10.3	2.36	11.0	2.38	11.8	2.41	12.1	2.42
	30.0	8.6	2.76	9.7	2.81	10.3	2.83	11.0	2.87	11.8	2.90	12.1	2.91
	35.0	8.6	3.34	9.7	3.39	10.3	3.42	11.0	3.46	11.8	3.50	12.1	3.52
	40.0	6.4	2.48	7.2	2.53	7.6	2.55	8.2	2.58	8.7	2.61	9.0	2.62
	46.0	4.2	1.63	4.7	1.66	5.0	1.67	5.3	1.69	5.7	1.71	5.9	1.72
52	-10.0	8.6	2.39	9.7	2.43	10.3	2.45	11.0	2.48	11.8	2.51	12.1	2.52
	0.0	8.6	2.15	9.7	2.18	10.3	2.20	11.0	2.23	11.8	2.25	12.1	2.26
	5.0	8.6	2.00	9.7	2.04	10.3	2.05	11.0	2.08	11.8	2.10	12.1	2.11
	10.0	8.6	1.94	9.7	1.97	10.3	1.99	11.0	2.01	11.8	2.03	12.1	2.05
	15.0	8.6	2.04	9.7	2.08	10.3	2.10	11.0	2.12	11.8	2.14	12.1	2.15
	20.0	8.6	2.03	9.7	2.07	10.3	2.08	11.0	2.11	11.8	2.13	12.1	2.14
	25.0	8.6	2.30	9.7	2.34	10.3	2.36	11.0	2.38	11.8	2.41	12.1	2.42
	30.0	8.6	2.76	9.7	2.81	10.3	2.83	11.0	2.87	11.8	2.90	12.1	2.91
	35.0	8.6	3.34	9.7	3.39	10.3	3.42	11.0	3.46	11.8	3.50	12.1	3.52
	40.0	6.4	2.48	7.2	2.53	7.6	2.55	8.2	2.58	8.7	2.61	9.0	2.62
	46.0	4.2	1.63	4.7	1.66	5.0	1.67	5.3	1.69	5.7	1.71	5.9	1.72
51	-10.0	8.6	2.39	9.7	2.43	10.3	2.45	11.0	2.48	11.8	2.51	12.1	2.52
	0.0	8.6	2.15	9.7	2.18	10.3	2.20	11.0	2.23	11.8	2.25	12.1	2.26
	5.0	8.6	2.00	9.7	2.04	10.3	2.05	11.0	2.08	11.8	2.10	12.1	2.11
	10.0	8.6	1.94	9.7	1.97	10.3	1.99	11.0	2.01	11.8	2.03	12.1	2.05
	15.0	8.6	2.04	9.7	2.08	10.3	2.10	11.0	2.12	11.8	2.14	12.1	2.15
	20.0	8.6	2.03	9.7	2.07	10.3	2.08	11.0	2.11	11.8	2.13	12.1	2.14
	25.0	8.6	2.30	9.7	2.34	10.3	2.36	11.0	2.38	11.8	2.41	12.1	2.42
	30.0	8.6	2.76	9.7	2.81	10.3	2.83	11.0	2.87	11.8	2.90	12.1	2.91
	35.0	8.6	3.34	9.7	3.39	10.3	3.42	11.0	3.46	11.8	3.50	12.1	3.52
	40.0	6.4	2.48	7.2	2.53	7.6	2.55	8.2	2.58	8.7	2.61	9.0	2.62
	46.0	4.2	1.63	4.7	1.66	5.0	1.67	5.3	1.69	5.7	1.71	5.9	1.72
50	-10.0	8.6	2.39	9.7	2.43	10.3	2.45	11.0	2.48	11.8	2.51	12.1	2.52
	0.0	8.6	2.15	9.7	2.18	10.3	2.20	11.0	2.23	11.8	2.25	12.1	2.26
	5.0	8.6	2.00	9.7	2.04	10.3	2.05	11.0	2.08	11.8	2.10	12.1	2.11
	10.0	8.6	1.94	9.7	1.97	10.3	1.99	11.0	2.01	11.8	2.03	12.1	2.05
	15.0	8.6	2.04	9.7	2.08	10.3	2.10	11.0	2.12	11.8	2.14	12.1	2.15
	20.0	8.6	2.03	9.7	2.07	10.3	2.08	11.0	2.11	11.8	2.13	12.1	2.14
	25.0	8.6	2.30	9.7	2.34	10.3	2.36	11.0	2.38	11.8	2.41	12.1	2.42
	30.0	8.6	2.76	9.7	2.81	10.3	2.83	11.0	2.87	11.8	2.90	12.1	2.91
	35.0	8.6	3.34	9.7	3.39	10.3	3.42	11.0	3.46	11.8	3.50	12.1	3.52
	40.0	6.4	2.48	7.2	2.53	7.6	2.55	8.2	2.58	8.7	2.61	9.0	2.62
	46.0	4.2	1.63	4.7	1.66	5.0	1.67	5.3	1.69	5.7	1.71	5.9	1.72
49	-10.0	8.6	2.39	9.7	2.43	10.3	2.45	11.0	2.48	11.8	2.51	12.1	2.52
	0.0	8.6	2.15	9.7	2.18	10.3	2.20	11.0	2.23	11.8	2.25	12.1	2.26
	5.0	8.6	2.00	9.7	2.04	10.3	2.05	11.0	2.08	11.8	2.10	12.1	2.11
	10.0	8.6	1.94	9.7	1.97	10.3	1.99	11.0	2.01	11.8	2.03	12.1	2.05
	15.0	8.6	2.04	9.7	2.08	10.3	2.10	11.0	2.12	11.8	2.14	12.1	2.15
	20.0	8.6	2.03	9.7	2.07	10.3	2.08	11.0	2.11	11.8	2.13	12.1	2.14
	25.0	8.6	2.30	9.7	2.34	10.3	2.36	11.0	2.38	11.8	2.41	12.1	2.42
	30.0	8.6	2.76	9.7	2.81	10.3	2.83	11.0	2.87	11.8	2.90	12.1	2.91
	35.0	8.6	3.34	9.7	3.39	10.3	3.42	11.0	3.46	11.8	3.50	12.1	3.52
	40.0	6.4	2.48	7.2	2.53	7.6	2.55	8.2	2.58	8.7	2.61	9.0	2.62
	46.0	4.2	1.63	4.7	1.66	5.0	1.67	5.3	1.69	5.7	1.71	5.9	1.72
48	-10.0	8.6	2.39	9.7	2.43	10.3	2.45	11.0	2.48	11.8	2.51	12.1	2.52
	0.0	8.6	2.15	9.7	2.18	10.3	2.20	11.0	2.23	11.8	2.25	12.1	2.26
	5.0	8.6	2.00	9.7	2.04	10.3	2.05	11.0	2.08	11.8	2.10	12.1	2.11
	10.0	8.6	1.94	9.7	1.97	10.3	1.99	11.0	2.01	11.8	2.03	12.1	2.05
	15.0	8.6	2.04	9.7	2.08	10.3	2.10	11.0	2.12	11.8	2.14	12.1	2.15
	20.0	8.6	2.03	9.7	2.07	10.3	2.08	11.0	2.11	11.8	2.13	12.1	2.14
	25.0	8.6	2.30	9.7	2.34	10.3	2.36	11.0	2.38	11.8	2.41	12.1	2.42
	30.0	8.6	2.76	9.7	2.81	10.3	2.83	11.0	2.87	11.8	2.90	12.1	2.91
	35.0	8.6	3.34	9.7	3.39	10.3	3.42	11.0	3.46	11.8	3.50	12.1	3.52
	40.0	6.4	2.48	7.2	2.53	7.6	2.55	8.2	2.58	8.7	2.61	9.0	2.62
	46.0	4.2	1.63	4.7	1.66	5.0	1.67	5.3	1.69	5.7	1.71	5.9	1.72

OUTDOOR UNIT AOEG36KBTA5

Indoor unit connecting capacity	Outdoor temperature	Indoor temperature											
		18.0 °CDB		21.0 °CDB		23.0 °CDB		27.0 °CDB		29.0 °CDB		32.0 °CDB	
		12.0 °CWB		15.0 °CWB		16.0 °CWB		19.0 °CWB		21.0 °CWB		23.0 °CWB	
kBtu/h	°CDB	TC	IP	TC	IP	TC	IP	TC	IP	TC	IP	TC	IP
47	-10.0	8.6	2.39	9.7	2.43	10.3	2.45	11.0	2.48	11.8	2.51	12.1	2.52
	0.0	8.6	2.15	9.7	2.18	10.3	2.20	11.0	2.23	11.8	2.25	12.1	2.26
	5.0	8.6	2.00	9.7	2.04	10.3	2.05	11.0	2.08	11.8	2.10	12.1	2.11
	10.0	8.6	1.94	9.7	1.97	10.3	1.99	11.0	2.01	11.8	2.03	12.1	2.05
	15.0	8.6	2.04	9.7	2.08	10.3	2.10	11.0	2.12	11.8	2.14	12.1	2.15
	20.0	8.6	2.03	9.7	2.07	10.3	2.08	11.0	2.11	11.8	2.13	12.1	2.14
	25.0	8.6	2.30	9.7	2.34	10.3	2.36	11.0	2.38	11.8	2.41	12.1	2.42
	30.0	8.6	2.76	9.7	2.81	10.3	2.83	11.0	2.87	11.8	2.90	12.1	2.91
	35.0	8.6	3.34	9.7	3.39	10.3	3.42	11.0	3.46	11.8	3.50	12.1	3.52
	40.0	6.4	2.48	7.2	2.53	7.6	2.55	8.2	2.58	8.7	2.61	9.0	2.62
	46.0	4.2	1.63	4.7	1.66	5.0	1.67	5.3	1.69	5.7	1.71	5.9	1.72
46	-10.0	8.6	2.39	9.7	2.43	10.3	2.45	11.0	2.48	11.8	2.51	12.1	2.52
	0.0	8.6	2.15	9.7	2.18	10.3	2.20	11.0	2.23	11.8	2.25	12.1	2.26
	5.0	8.6	2.00	9.7	2.04	10.3	2.05	11.0	2.08	11.8	2.10	12.1	2.11
	10.0	8.6	1.94	9.7	1.97	10.3	1.99	11.0	2.01	11.8	2.03	12.1	2.05
	15.0	8.6	2.04	9.7	2.08	10.3	2.10	11.0	2.12	11.8	2.14	12.1	2.15
	20.0	8.6	2.03	9.7	2.07	10.3	2.08	11.0	2.11	11.8	2.13	12.1	2.14
	25.0	8.6	2.30	9.7	2.34	10.3	2.36	11.0	2.38	11.8	2.41	12.1	2.42
	30.0	8.6	2.76	9.7	2.81	10.3	2.83	11.0	2.87	11.8	2.90	12.1	2.91
	35.0	8.6	3.34	9.7	3.39	10.3	3.42	11.0	3.46	11.8	3.50	12.1	3.52
	40.0	6.4	2.48	7.2	2.53	7.6	2.55	8.2	2.58	8.7	2.61	9.0	2.62
	46.0	4.2	1.63	4.7	1.66	5.0	1.67	5.3	1.69	5.7	1.71	5.9	1.72
45	-10.0	8.6	2.39	9.7	2.43	10.3	2.45	11.0	2.48	11.8	2.51	12.1	2.52
	0.0	8.6	2.15	9.7	2.18	10.3	2.20	11.0	2.23	11.8	2.25	12.1	2.26
	5.0	8.6	2.00	9.7	2.04	10.3	2.05	11.0	2.08	11.8	2.10	12.1	2.11
	10.0	8.6	1.94	9.7	1.97	10.3	1.99	11.0	2.01	11.8	2.03	12.1	2.05
	15.0	8.6	2.04	9.7	2.08	10.3	2.10	11.0	2.12	11.8	2.14	12.1	2.15
	20.0	8.6	2.03	9.7	2.07	10.3	2.08	11.0	2.11	11.8	2.13	12.1	2.14
	25.0	8.6	2.30	9.7	2.34	10.3	2.36	11.0	2.38	11.8	2.41	12.1	2.42
	30.0	8.6	2.76	9.7	2.81	10.3	2.83	11.0	2.87	11.8	2.90	12.1	2.91
	35.0	8.6	3.34	9.7	3.39	10.3	3.42	11.0	3.46	11.8	3.50	12.1	3.52
	40.0	6.4	2.48	7.2	2.53	7.6	2.55	8.2	2.58	8.7	2.61	9.0	2.62
	46.0	4.2	1.63	4.7	1.66	5.0	1.67	5.3	1.69	5.7	1.71	5.9	1.72
44	-10.0	8.6	2.39	9.7	2.43	10.3	2.45	11.0	2.48	11.8	2.51	12.1	2.52
	0.0	8.6	2.15	9.7	2.18	10.3	2.20	11.0	2.23	11.8	2.25	12.1	2.26
	5.0	8.6	2.00	9.7	2.04	10.3	2.05	11.0	2.08	11.8	2.10	12.1	2.11
	10.0	8.6	1.94	9.7	1.97	10.3	1.99	11.0	2.01	11.8	2.03	12.1	2.05
	15.0	8.6	2.04	9.7	2.08	10.3	2.10	11.0	2.12	11.8	2.14	12.1	2.15
	20.0	8.6	2.03	9.7	2.07	10.3	2.08	11.0	2.11	11.8	2.13	12.1	2.14
	25.0	8.6	2.30	9.7	2.34	10.3	2.36	11.0	2.38	11.8	2.41	12.1	2.42
	30.0	8.6	2.76	9.7	2.81	10.3	2.83	11.0	2.87	11.8	2.90	12.1	2.91
	35.0	8.6	3.34	9.7	3.39	10.3	3.42	11.0	3.46	11.8	3.50	12.1	3.52
	40.0	6.4	2.48	7.2	2.53	7.6	2.55	8.2	2.58	8.7	2.61	9.0	2.62
	46.0	4.2	1.63	4.7	1.66	5.0	1.67	5.3	1.69	5.7	1.71	5.9	1.72
43	-10.0	8.6	2.39	9.7	2.43	10.3	2.45	11.0	2.48	11.8	2.51	12.1	2.52
	0.0	8.6	2.15	9.7	2.18	10.3	2.20	11.0	2.23	11.8	2.25	12.1	2.26
	5.0	8.6	2.00	9.7	2.04	10.3	2.05	11.0	2.08	11.8	2.10	12.1	2.11
	10.0	8.6	1.94	9.7	1.97	10.3	1.99	11.0	2.01	11.8	2.03	12.1	2.05
	15.0	8.6	2.04	9.7	2.08	10.3	2.10	11.0	2.12	11.8	2.14	12.1	2.15
	20.0	8.6	2.03	9.7	2.07	10.3	2.08	11.0	2.11	11.8	2.13	12.1	2.14
	25.0	8.6	2.30	9.7	2.34	10.3	2.36	11.0	2.38	11.8	2.41	12.1	2.42
	30.0	8.6	2.76	9.7	2.81	10.3	2.83	11.0	2.87	11.8	2.90	12.1	2.91
	35.0	8.6	3.34	9.7	3.39	10.3	3.42	11.0	3.46	11.8	3.50	12.1	3.52
	40.0	6.4	2.48	7.2	2.53	7.6	2.55	8.2	2.58	8.7	2.61	9.0	2.62
	46.0	4.2	1.63	4.7	1.66	5.0	1.67	5.3	1.69	5.7	1.71	5.9	1.72
42	-10.0	8.6	2.39	9.7	2.43	10.3	2.45	11.0	2.48	11.8	2.51	12.1	2.52
	0.0	8.6	2.15	9.7	2.18	10.3	2.20	11.0	2.23	11.8	2.25	12.1	2.26
	5.0	8.6	2.00	9.7	2.04	10.3	2.05	11.0	2.08	11.8	2.10	12.1	2.11
	10.0	8.6	1.94	9.7	1.97	10.3	1.99	11.0	2.01	11.8	2.03	12.1	2.05
	15.0	8.6	2.04	9.7	2.08	10.3	2.10	11.0	2.12	11.8	2.14	12.1	2.15
	20.0	8.6	2.03	9.7	2.07	10.3	2.08	11.0	2.11	11.8	2.13	12.1	2.14
	25.0	8.6	2.30	9.7	2.34	10.3	2.36	11.0	2.38	11.8	2.41	12.1	2.42
	30.0	8.6	2.76	9.7	2.81	10.3	2.83	11.0	2.87	11.8	2.90	12.1	2.91
	35.0	8.6	3.34	9.7	3.39	10.3	3.42	11.0	3.46	11.8	3.50	12.1	3.52
	40.0	6.4	2.48	7.2	2.53	7.6	2.55	8.2	2.58	8.7	2.61	9.0	2.62
	46.0	4.2	1.63	4.7	1.66	5.0	1.67	5.3	1.69	5.7	1.71	5.9	1.72
41	-10.0	8.6	2.39	9.7	2.43	10.3	2.45	11.0	2.48	11.8	2.51	12.1	2.52
	0.0	8.6	2.15	9.7	2.18	10.3	2.20	11.0	2.23	11.8	2.25	12.1	2.26
	5.0	8.6	2.00	9.7	2.04	10.3	2.05	11.0	2.08	11.8	2.10	12.1	2.11
	10.0	8.6	1.94	9.7	1.97	10.3	1.99	11.0	2.01	11.8	2.03	12.1	2.05
	15.0	8.6	2.04	9.7	2.08	10.3	2.10	11.0	2.12	11.8	2.14	12.1	2.15
	20.0	8.6	2.03	9.7	2.07	10.3	2.08	11.0	2.11	11.8	2.13	12.1	2.14
	25.0	8.6	2.30	9.7	2.34	10.3	2.36	11.0	2.38	11.8	2.41	12.1	2.42
	30.0	8.6	2.76	9.7	2.81	10.3	2.83	11.0	2.87	11.8	2.90	12.1	2.91
	35.0	8.6	3.34	9.7	3.39	10.3	3.42	11.0	3.46	11.8	3.50	12.1	3.52
	40.0	6.4	2.48	7.2	2.53	7.6	2.55	8.2	2.58	8.7	2.61	9.0	2.62
	46.0	4.2	1.63	4.7	1.66	5.0	1.67	5.3	1.69	5.7	1.71	5.9	1.72
40	-10.0	8.6	2.39	9.7	2.43	10.3	2.45	11.0	2.48	11.8	2.51	12.1	2.52
	0.0	8.6	2.15	9.7	2.18	10.3	2.20	11.0	2.23	11.8	2.25	12.1	2.26
	5.0	8.6	2.00	9.7	2.04	10.3	2.05	11.0	2.08	11.8	2.10	12.1	2.11
	10.0	8.6	1.94	9.7	1.97	10.3	1.99	11.0	2.01	11.8	2.03	12.1	2.05
	15.0	8.6	2.04	9.7	2.08	10.3	2.10	11.0	2.12	11.8	2.14	12.1	2.15
	20.0	8.6	2.03	9.7	2.07	10.3	2.08	11.0	2.11	11.8	2.13	12.1	2.14
	25.0	8.6	2.30	9.7	2.34	10.3	2.36	11.0	2.38	11.8	2.41	12.1	2.42
	30.0	8.6	2.76	9.7	2.81	10.3	2.83	11.0	2.87	11.8	2.90	12.1	2.91
	35.0	8.6	3.34	9.7	3.39	10.3	3.42	11.0	3.46	11.8	3.50	12.1	3.52
	40.0	6.4	2.48	7.2	2.53	7.6	2.55	8.2	2.58	8.7	2.61	9.0	2.62
	46.0	4.2	1.63	4.7	1.66	5.0	1.67	5.3	1.69	5.7	1.71	5.9	1.72

OUTDOOR UNIT
AOEG36KBTA5

Indoor unit connecting capacity	Outdoor temperature	Indoor temperature											
		18.0 °CDB		21.0 °CDB		23.0 °CDB		27.0 °CDB		29.0 °CDB		32.0 °CDB	
		12.0 °CWB		15.0 °CWB		16.0 °CWB		19.0 °CWB		21.0 °CWB		23.0 °CWB	
kBtu/h	°CDB	TC	IP	TC	IP	TC	IP	TC	IP	TC	IP	TC	IP
39	-10.0	8.6	2.39	9.7	2.43	10.3	2.45	11.0	2.48	11.8	2.51	12.1	2.52
	0.0	8.6	2.15	9.7	2.18	10.3	2.20	11.0	2.23	11.8	2.25	12.1	2.26
	5.0	8.6	2.00	9.7	2.04	10.3	2.05	11.0	2.08	11.8	2.10	12.1	2.11
	10.0	8.6	1.94	9.7	1.97	10.3	1.99	11.0	2.01	11.8	2.03	12.1	2.05
	15.0	8.6	2.04	9.7	2.08	10.3	2.10	11.0	2.12	11.8	2.14	12.1	2.15
	20.0	8.6	2.03	9.7	2.07	10.3	2.08	11.0	2.11	11.8	2.13	12.1	2.14
	25.0	8.6	2.30	9.7	2.34	10.3	2.36	11.0	2.38	11.8	2.41	12.1	2.42
	30.0	8.6	2.76	9.7	2.81	10.3	2.83	11.0	2.87	11.8	2.90	12.1	2.91
	35.0	8.6	3.34	9.7	3.39	10.3	3.42	11.0	3.46	11.8	3.50	12.1	3.52
	40.0	6.4	2.48	7.2	2.53	7.6	2.55	8.2	2.58	8.7	2.61	9.0	2.62
	46.0	4.2	1.63	4.7	1.66	5.0	1.67	5.3	1.69	5.7	1.71	5.9	1.72
38	-10.0	8.6	2.39	9.7	2.43	10.3	2.45	11.0	2.48	11.8	2.51	12.1	2.52
	0.0	8.6	2.15	9.7	2.18	10.3	2.20	11.0	2.23	11.8	2.25	12.1	2.26
	5.0	8.6	2.00	9.7	2.04	10.3	2.05	11.0	2.08	11.8	2.10	12.1	2.11
	10.0	8.6	1.94	9.7	1.97	10.3	1.99	11.0	2.01	11.8	2.03	12.1	2.05
	15.0	8.6	2.04	9.7	2.08	10.3	2.10	11.0	2.12	11.8	2.14	12.1	2.15
	20.0	8.6	2.03	9.7	2.07	10.3	2.08	11.0	2.11	11.8	2.13	12.1	2.14
	25.0	8.6	2.30	9.7	2.34	10.3	2.36	11.0	2.38	11.8	2.41	12.1	2.42
	30.0	8.6	2.76	9.7	2.81	10.3	2.83	11.0	2.87	11.8	2.90	12.1	2.91
	35.0	8.6	3.34	9.7	3.39	10.3	3.42	11.0	3.46	11.8	3.50	12.1	3.52
	40.0	6.4	2.48	7.2	2.53	7.6	2.55	8.2	2.58	8.7	2.61	9.0	2.62
	46.0	4.2	1.63	4.7	1.66	5.0	1.67	5.3	1.69	5.7	1.71	5.9	1.72
37	-10.0	8.6	2.39	9.7	2.43	10.3	2.45	11.0	2.48	11.8	2.51	12.1	2.52
	0.0	8.6	2.15	9.7	2.18	10.3	2.20	11.0	2.23	11.8	2.25	12.1	2.26
	5.0	8.6	2.00	9.7	2.04	10.3	2.05	11.0	2.08	11.8	2.10	12.1	2.11
	10.0	8.6	1.94	9.7	1.97	10.3	1.99	11.0	2.01	11.8	2.03	12.1	2.05
	15.0	8.6	2.04	9.7	2.08	10.3	2.10	11.0	2.12	11.8	2.14	12.1	2.15
	20.0	8.6	2.03	9.7	2.07	10.3	2.08	11.0	2.11	11.8	2.13	12.1	2.14
	25.0	8.6	2.30	9.7	2.34	10.3	2.36	11.0	2.38	11.8	2.41	12.1	2.42
	30.0	8.6	2.76	9.7	2.81	10.3	2.83	11.0	2.87	11.8	2.90	12.1	2.91
	35.0	8.6	3.34	9.7	3.39	10.3	3.42	11.0	3.46	11.8	3.50	12.1	3.52
	40.0	6.4	2.48	7.2	2.53	7.6	2.55	8.2	2.58	8.7	2.61	9.0	2.62
	46.0	4.2	1.63	4.7	1.66	5.0	1.67	5.3	1.69	5.7	1.71	5.9	1.72
36	-10.0	8.6	2.39	9.7	2.43	10.3	2.45	11.0	2.48	11.8	2.51	12.1	2.52
	0.0	8.6	2.15	9.7	2.18	10.3	2.20	11.0	2.23	11.8	2.25	12.1	2.26
	5.0	8.6	2.00	9.7	2.04	10.3	2.05	11.0	2.08	11.8	2.10	12.1	2.11
	10.0	8.6	1.94	9.7	1.97	10.3	1.99	11.0	2.01	11.8	2.03	12.1	2.05
	15.0	8.6	2.04	9.7	2.08	10.3	2.10	11.0	2.12	11.8	2.14	12.1	2.15
	20.0	8.6	2.03	9.7	2.07	10.3	2.08	11.0	2.11	11.8	2.13	12.1	2.14
	25.0	8.6	2.30	9.7	2.34	10.3	2.36	11.0	2.38	11.8	2.41	12.1	2.42
	30.0	8.6	2.76	9.7	2.81	10.3	2.83	11.0	2.87	11.8	2.90	12.1	2.91
	35.0	8.6	3.34	9.7	3.39	10.3	3.42	11.0	3.46	11.8	3.50	12.1	3.52
	40.0	6.4	2.48	7.2	2.53	7.6	2.55	8.2	2.58	8.7	2.61	9.0	2.62
	46.0	4.2	1.63	4.7	1.66	5.0	1.67	5.3	1.69	5.7	1.71	5.9	1.72
35	-10.0	8.6	2.39	9.7	2.43	10.3	2.45	11.0	2.48	11.8	2.51	12.1	2.52
	0.0	8.6	2.15	9.7	2.18	10.3	2.20	11.0	2.23	11.8	2.25	12.1	2.26
	5.0	8.6	2.00	9.7	2.04	10.3	2.05	11.0	2.08	11.8	2.10	12.1	2.11
	10.0	8.6	1.94	9.7	1.97	10.3	1.99	11.0	2.01	11.8	2.03	12.1	2.05
	15.0	8.6	2.04	9.7	2.08	10.3	2.10	11.0	2.12	11.8	2.14	12.1	2.15
	20.0	8.6	2.03	9.7	2.07	10.3	2.08	11.0	2.11	11.8	2.13	12.1	2.14
	25.0	8.6	2.30	9.7	2.34	10.3	2.36	11.0	2.38	11.8	2.41	12.1	2.42
	30.0	8.6	2.76	9.7	2.81	10.3	2.83	11.0	2.87	11.8	2.90	12.1	2.91
	35.0	8.6	3.34	9.7	3.39	10.3	3.42	11.0	3.46	11.8	3.50	12.1	3.52
	40.0	6.4	2.48	7.2	2.53	7.6	2.55	8.2	2.58	8.7	2.61	9.0	2.62
	46.0	4.2	1.63	4.7	1.66	5.0	1.67	5.3	1.69	5.7	1.71	5.9	1.72
34	-10.0	8.6	2.39	9.7	2.43	10.3	2.45	11.0	2.48	11.8	2.51	12.1	2.52
	0.0	8.6	2.15	9.7	2.18	10.3	2.20	11.0	2.23	11.8	2.25	12.1	2.26
	5.0	8.6	2.00	9.7	2.04	10.3	2.05	11.0	2.08	11.8	2.10	12.1	2.11
	10.0	8.6	1.94	9.7	1.97	10.3	1.99	11.0	2.01	11.8	2.03	12.1	2.05
	15.0	8.6	2.04	9.7	2.08	10.3	2.10	11.0	2.12	11.8	2.14	12.1	2.15
	20.0	8.6	2.03	9.7	2.07	10.3	2.08	11.0	2.11	11.8	2.13	12.1	2.14
	25.0	8.6	2.30	9.7	2.34	10.3	2.36	11.0	2.38	11.8	2.41	12.1	2.42
	30.0	8.6	2.76	9.7	2.81	10.3	2.83	11.0	2.87	11.8	2.90	12.1	2.91
	35.0	8.6	3.34	9.7	3.39	10.3	3.42	11.0	3.46	11.8	3.50	12.1	3.52
	40.0	6.4	2.48	7.2	2.53	7.6	2.55	8.2	2.58	8.7	2.61	9.0	2.62
	46.0	6.4	1.63	7.2	1.66	7.6	1.67	8.2	1.69	8.7	1.71	9.0	1.72
33	-10.0	8.6	2.39	9.7	2.43	10.3	2.45	11.0	2.48	11.8	2.51	12.1	2.52
	0.0	8.6	2.15	9.7	2.18	10.3	2.20	11.0	2.23	11.8	2.25	12.1	2.26
	5.0	8.6	2.00	9.7	2.04	10.3	2.05	11.0	2.08	11.8	2.10	12.1	2.11
	10.0	8.6	1.94	9.7	1.97	10.3	1.99	11.0	2.01	11.8	2.03	12.1	2.05
	15.0	8.6	2.04	9.7	2.08	10.3	2.10	11.0	2.12	11.8	2.14	12.1	2.15
	20.0	8.6	2.03	9.7	2.07	10.3	2.08	11.0	2.11	11.8	2.13	12.1	2.14
	25.0	8.6	2.30	9.7	2.34	10.3	2.36	11.0	2.38	11.8	2.41	12.1	2.42
	30.0	8.6	2.76	9.7	2.81	10.3	2.83	11.0	2.87	11.8	2.90	12.1	2.91
	35.0	8.6	3.34	9.7	3.39	10.3	3.42	11.0	3.46	11.8	3.50	12.1	3.52
	40.0	6.4	2.48	7.2	2.53	7.6	2.55	8.2	2.58	8.7	2.61	9.0	2.62
	46.0	6.4	1.63	7.2	1.66	7.6	1.67	8.2	1.69	8.7	1.71	9.0	1.72
32	-10.0	8.6	2.39	9.7	2.43	10.3	2.45	11.0	2.48	11.8	2.51	12.1	2.52
	0.0	8.6	2.15	9.7	2.18	10.3	2.20	11.0	2.23	11.8	2.25	12.1	2.26
	5.0	8.6	2.00	9.7	2.04	10.3	2.05	11.0	2.08	11.8	2.10	12.1	2.11
	10.0	8.6	1.94	9.7	1.97	10.3	1.99	11.0	2.01	11.8	2.03	12.1	2.05
	15.0	8.6	2.04	9.7	2.08	10.3	2.10	11.0	2.12	11.8	2.14	12.1	2.15
	20.0	8.6	2.03	9.7	2.07	10.3	2.08	11.0	2.11	11.8	2.13	12.1	2.14
	25.0	8.6	2.30	9.7	2.34	10.3	2.36	11.0	2.38	11.8	2.41	12.1	2.42
	30.0	8.6	2.76	9.7	2.81	10.3	2.83	11.0	2.87	11.8	2.90	12.1	2.91
	35.0	8.6	3.34	9.7	3.39	10.3	3.42	11.0	3.46	11.8	3.50	12.1	3.52
	40.0	6.4	2.48	7.2	2.53	7.6	2.55	8.2	2.58	8.7	2.61	9.0	2.62
	46.0	6.4	1.63	7.2	1.66	7.6	1.67	8.2	1.69	8.7	1.71	9.0	1.72

OUTDOOR UNIT
AOEG36KBTA5

Indoor unit connecting capacity	Outdoor temperature	Indoor temperature											
		18.0 °CDB		21.0 °CDB		23.0 °CDB		27.0 °CDB		29.0 °CDB		32.0 °CDB	
		12.0 °CWB		15.0 °CWB		16.0 °CWB		19.0 °CWB		21.0 °CWB		23.0 °CWB	
kBtu/h	°CDB	TC	IP	TC	IP	TC	IP	TC	IP	TC	IP	TC	IP
31	-10.0	8.6	2.39	9.7	2.43	10.3	2.45	11.0	2.48	11.8	2.51	12.1	2.52
	0.0	8.6	2.15	9.7	2.18	10.3	2.20	11.0	2.23	11.8	2.25	12.1	2.26
	5.0	8.6	2.00	9.7	2.04	10.3	2.05	11.0	2.08	11.8	2.10	12.1	2.11
	10.0	8.6	1.94	9.7	1.97	10.3	1.99	11.0	2.01	11.8	2.03	12.1	2.05
	15.0	8.6	2.04	9.7	2.08	10.3	2.10	11.0	2.12	11.8	2.14	12.1	2.15
	20.0	8.6	2.03	9.7	2.07	10.3	2.08	11.0	2.11	11.8	2.13	12.1	2.14
	25.0	8.6	2.30	9.7	2.34	10.3	2.36	11.0	2.38	11.8	2.41	12.1	2.42
	30.0	8.6	2.76	9.7	2.81	10.3	2.83	11.0	2.87	11.8	2.90	12.1	2.91
	35.0	8.6	3.34	9.7	3.39	10.3	3.42	11.0	3.46	11.8	3.50	12.1	3.52
	40.0	6.4	2.48	7.2	2.53	7.6	2.55	8.2	2.58	8.7	2.61	9.0	2.62
	46.0	6.4	1.63	7.2	1.66	7.6	1.67	8.2	1.69	8.7	1.71	9.0	1.72
30	-10.0	8.4	2.26	9.5	2.30	10.0	2.32	10.7	2.35	11.4	2.38	11.8	2.39
	0.0	8.4	2.03	9.5	2.07	10.0	2.09	10.7	2.11	11.4	2.13	11.8	2.15
	5.0	8.4	1.90	9.5	1.93	10.0	1.95	10.7	1.97	11.4	1.99	11.8	2.00
	10.0	8.4	1.84	9.5	1.87	10.0	1.89	10.7	1.91	11.4	1.93	11.8	1.94
	15.0	8.4	1.94	9.5	1.97	10.0	1.99	10.7	2.01	11.4	2.03	11.8	2.04
	20.0	8.4	1.93	9.5	1.96	10.0	1.98	10.7	2.00	11.4	2.02	11.8	2.03
	25.0	8.4	2.18	9.5	2.22	10.0	2.24	10.7	2.26	11.4	2.29	11.8	2.30
	30.0	8.4	2.62	9.5	2.66	10.0	2.69	10.7	2.72	11.4	2.75	11.8	2.76
	35.0	8.4	3.16	9.5	3.22	10.0	3.24	10.7	3.28	11.4	3.32	11.8	3.34
	40.0	6.2	2.35	7.0	2.40	7.4	2.42	7.9	2.44	8.5	2.47	8.8	2.48
	46.0	6.2	1.55	7.0	1.57	7.4	1.59	7.9	1.60	8.5	1.62	8.8	1.63
29	-10.0	8.2	2.15	9.2	2.18	9.7	2.20	10.4	2.23	11.1	2.25	11.5	2.26
	0.0	8.2	1.93	9.2	1.96	9.7	1.98	10.4	2.00	11.1	2.02	11.5	2.03
	5.0	8.2	1.80	9.2	1.83	9.7	1.85	10.4	1.87	11.1	1.89	11.5	1.90
	10.0	8.2	1.74	9.2	1.77	9.7	1.79	10.4	1.81	11.1	1.83	11.5	1.84
	15.0	8.2	1.84	9.2	1.87	9.7	1.88	10.4	1.90	11.1	1.93	11.5	1.94
	20.0	8.2	1.83	9.2	1.86	9.7	1.87	10.4	1.89	11.1	1.92	11.5	1.93
	25.0	8.2	2.07	9.2	2.10	9.7	2.12	10.4	2.14	11.1	2.17	11.5	2.18
	30.0	8.2	2.48	9.2	2.53	9.7	2.55	10.4	2.58	11.1	2.61	11.5	2.62
	35.0	8.2	3.00	9.2	3.05	9.7	3.08	10.4	3.11	11.1	3.15	11.5	3.16
	40.0	6.1	2.23	6.8	2.27	7.2	2.29	7.7	2.32	8.3	2.34	8.5	2.35
	46.0	3.9	1.47	4.5	1.49	4.7	1.50	5.0	1.52	5.4	1.54	5.5	1.55
28	-10.0	7.8	2.06	8.9	2.10	9.3	2.11	10.0	2.14	10.7	2.16	11.0	2.17
	0.0	7.8	1.85	8.9	1.88	9.3	1.90	10.0	1.92	10.7	1.94	11.0	1.95
	5.0	7.8	1.73	8.9	1.76	9.3	1.77	10.0	1.79	10.7	1.81	11.0	1.82
	10.0	7.8	1.67	8.9	1.70	9.3	1.72	10.0	1.73	10.7	1.75	11.0	1.76
	15.0	7.8	1.76	8.9	1.79	9.3	1.81	10.0	1.83	10.7	1.85	11.0	1.86
	20.0	7.8	1.75	8.9	1.78	9.3	1.80	10.0	1.82	10.7	1.84	11.0	1.85
	25.0	7.8	1.98	8.9	2.02	9.3	2.03	10.0	2.06	10.7	2.08	11.0	2.09
	30.0	7.8	2.38	8.9	2.42	9.3	2.44	10.0	2.47	10.7	2.50	11.0	2.51
	35.0	7.8	2.88	8.9	2.93	9.3	2.95	10.0	2.98	10.7	3.02	11.0	3.03
	40.0	5.8	2.14	6.6	2.18	6.9	2.20	7.4	2.22	7.9	2.25	8.2	2.26
	46.0	5.8	1.41	6.6	1.43	6.9	1.44	7.4	1.46	7.9	1.48	8.2	1.48
27	-10.0	7.5	1.96	8.5	1.99	9.0	2.01	9.6	2.03	10.3	2.05	10.6	2.07
	0.0	7.5	1.76	8.5	1.79	9.0	1.81	9.6	1.83	10.3	1.85	10.6	1.86
	5.0	7.5	1.64	8.5	1.67	9.0	1.68	9.6	1.70	10.3	1.72	10.6	1.73
	10.0	7.5	1.59	8.5	1.62	9.0	1.63	9.6	1.65	10.3	1.67	10.6	1.68
	15.0	7.5	1.67	8.5	1.70	9.0	1.72	9.6	1.74	10.3	1.76	10.6	1.77
	20.0	7.5	1.67	8.5	1.70	9.0	1.71	9.6	1.73	10.3	1.75	10.6	1.76
	25.0	7.5	1.88	8.5	1.92	9.0	1.93	9.6	1.95	10.3	1.98	10.6	1.99
	30.0	7.5	2.26	8.5	2.30	9.0	2.32	9.6	2.35	10.3	2.38	10.6	2.39
	35.0	7.5	2.73	8.5	2.78	9.0	2.81	9.6	2.84	10.3	2.87	10.6	2.89
	40.0	5.6	2.04	6.3	2.07	6.7	2.09	7.1	2.11	7.6	2.14	7.9	2.15
	46.0	5.6	1.34	6.3	1.36	6.7	1.37	7.1	1.39	7.6	1.40	7.9	1.41

NOTES:

- TC: Total Capacity (kW), IP: Input Power (kW)
- Values mentioned in the table are based on the following conditions:
  - Power source of specifications: 230 V
  - Pipe length: 5 m, Height difference: 0 m (Outdoor unit—Indoor unit)
- 2 or more indoor units should be connected.
- The total ability of connected indoor unit is from 27,000 Btu/h up to 54,000 Btu/h.
- Input in the table are calculated based on the maximum indoor unit input combinations.

OUTDOOR UNIT AOEG36KBTA5

● Compact cassette type

Model: AUXG07KVLA

Outdoor temperature	Indoor temperature (°CDB / °CWB)											
	18.0 / 12.0		21.0 / 15.0		23.0 / 16.0		27.0 / 19.0		29.0 / 21.0		32.0 / 23.0	
(°CDB)	TC	SHC	TC	SHC	TC	SHC	TC	SHC	TC	SHC	TC	SHC
-10.0	1.96	1.32	2.22	1.51	2.34	1.74	2.50	1.95	2.67	2.13	2.76	2.44
-5.0	1.96	1.32	2.22	1.51	2.34	1.74	2.50	1.95	2.67	2.13	2.76	2.44
0.0	1.96	1.32	2.22	1.51	2.34	1.74	2.50	1.95	2.67	2.13	2.76	2.44
5.0	1.96	1.32	2.22	1.51	2.34	1.74	2.50	1.95	2.67	2.13	2.76	2.44
10.0	1.96	1.32	2.22	1.51	2.34	1.74	2.50	1.95	2.67	2.13	2.76	2.44
15.0	1.96	1.32	2.22	1.51	2.34	1.74	2.50	1.95	2.67	2.13	2.76	2.44
20.0	1.96	1.32	2.22	1.51	2.34	1.74	2.50	1.95	2.67	2.13	2.76	2.44
25.0	1.96	1.32	2.22	1.51	2.34	1.74	2.50	1.95	2.67	2.13	2.76	2.44
30.0	1.96	1.32	2.22	1.51	2.34	1.74	2.50	1.95	2.67	2.13	2.76	2.44
35.0	1.96	1.32	2.22	1.51	2.34	1.74	2.50	1.95	2.67	2.13	2.76	2.44
40.0	1.45	0.72	1.64	0.83	1.73	0.95	1.85	1.07	1.98	1.17	2.04	1.34
46.0	0.94	0.30	1.06	0.35	1.12	0.40	1.20	0.45	1.28	0.49	1.32	0.56

Model: AUXG09KVLA

Outdoor temperature	Indoor temperature (°CDB / °CWB)											
	18.0 / 12.0		21.0 / 15.0		23.0 / 16.0		27.0 / 19.0		29.0 / 21.0		32.0 / 23.0	
(°CDB)	TC	SHC	TC	SHC	TC	SHC	TC	SHC	TC	SHC	TC	SHC
-10.0	2.51	1.67	2.84	1.90	2.99	2.19	3.20	2.46	3.42	2.69	3.53	3.09
-5.0	2.51	1.67	2.84	1.90	2.99	2.19	3.20	2.46	3.42	2.69	3.53	3.09
0.0	2.51	1.67	2.84	1.90	2.99	2.19	3.20	2.46	3.42	2.69	3.53	3.09
5.0	2.51	1.67	2.84	1.90	2.99	2.19	3.20	2.46	3.42	2.69	3.53	3.09
10.0	2.51	1.67	2.84	1.90	2.99	2.19	3.20	2.46	3.42	2.69	3.53	3.09
15.0	2.51	1.67	2.84	1.90	2.99	2.19	3.20	2.46	3.42	2.69	3.53	3.09
20.0	2.51	1.67	2.84	1.90	2.99	2.19	3.20	2.46	3.42	2.69	3.53	3.09
25.0	2.51	1.67	2.84	1.90	2.99	2.19	3.20	2.46	3.42	2.69	3.53	3.09
30.0	2.51	1.67	2.84	1.90	2.99	2.19	3.20	2.46	3.42	2.69	3.53	3.09
35.0	2.51	1.67	2.84	1.90	2.99	2.19	3.20	2.46	3.42	2.69	3.53	3.09
40.0	1.86	0.92	2.10	1.04	2.21	1.20	2.37	1.35	2.53	1.48	2.61	1.69
46.0	1.20	0.38	1.36	0.44	1.43	0.51	1.54	0.57	1.64	0.62	1.69	0.71

Model: AUXG12KVLA

Outdoor temperature	Indoor temperature (°CDB / °CWB)											
	18.0 / 12.0		21.0 / 15.0		23.0 / 16.0		27.0 / 19.0		29.0 / 21.0		32.0 / 23.0	
(°CDB)	TC	SHC	TC	SHC	TC	SHC	TC	SHC	TC	SHC	TC	SHC
-10.0	3.37	2.22	3.81	2.53	4.02	2.91	4.30	3.27	4.60	3.57	4.74	4.10
-5.0	3.37	2.22	3.81	2.53	4.02	2.91	4.30	3.27	4.60	3.57	4.74	4.10
0.0	3.37	2.22	3.81	2.53	4.02	2.91	4.30	3.27	4.60	3.57	4.74	4.10
5.0	3.37	2.22	3.81	2.53	4.02	2.91	4.30	3.27	4.60	3.57	4.74	4.10
10.0	3.37	2.22	3.81	2.53	4.02	2.91	4.30	3.27	4.60	3.57	4.74	4.10
15.0	3.37	2.22	3.81	2.53	4.02	2.91	4.30	3.27	4.60	3.57	4.74	4.10
20.0	3.37	2.22	3.81	2.53	4.02	2.91	4.30	3.27	4.60	3.57	4.74	4.10
25.0	3.37	2.22	3.81	2.53	4.02	2.91	4.30	3.27	4.60	3.57	4.74	4.10
30.0	3.37	2.22	3.81	2.53	4.02	2.91	4.30	3.27	4.60	3.57	4.74	4.10
35.0	3.37	2.22	3.81	2.53	4.02	2.91	4.30	3.27	4.60	3.57	4.74	4.10
40.0	2.49	1.21	2.82	1.38	2.97	1.59	3.18	1.79	3.40	1.96	3.51	2.24
46.0	1.62	0.51	1.83	0.58	1.93	0.67	2.06	0.75	2.21	0.82	2.27	0.94

Model: AUXG14KVLA

Outdoor temperature	Indoor temperature (°CDB / °CWB)											
	18.0 / 12.0		21.0 / 15.0		23.0 / 16.0		27.0 / 19.0		29.0 / 21.0		32.0 / 23.0	
(°CDB)	TC	SHC	TC	SHC	TC	SHC	TC	SHC	TC	SHC	TC	SHC
-10.0	3.92	2.44	4.43	2.78	4.67	3.20	5.00	3.60	5.35	3.94	5.51	4.51
-5.0	3.92	2.44	4.43	2.78	4.67	3.20	5.00	3.60	5.35	3.94	5.51	4.51
0.0	3.92	2.44	4.43	2.78	4.67	3.20	5.00	3.60	5.35	3.94	5.51	4.51
5.0	3.92	2.44	4.43	2.78	4.67	3.20	5.00	3.60	5.35	3.94	5.51	4.51
10.0	3.92	2.44	4.43	2.78	4.67	3.20	5.00	3.60	5.35	3.94	5.51	4.51
15.0	3.92	2.44	4.43	2.78	4.67	3.20	5.00	3.60	5.35	3.94	5.51	4.51
20.0	3.92	2.44	4.43	2.78	4.67	3.20	5.00	3.60	5.35	3.94	5.51	4.51
25.0	3.92	2.44	4.43	2.78	4.67	3.20	5.00	3.60	5.35	3.94	5.51	4.51
30.0	3.92	2.44	4.43	2.78	4.67	3.20	5.00	3.60	5.35	3.94	5.51	4.51
35.0	3.92	2.44	4.43	2.78	4.67	3.20	5.00	3.60	5.35	3.94	5.51	4.51
40.0	2.90	1.34	3.28	1.52	3.46	1.75	3.70	1.97	3.96	2.16	4.08	2.47
46.0	1.88	0.56	2.13	0.64	2.24	0.74	2.40	0.83	2.57	0.91	2.64	1.04

OUTDOOR UNIT
AOEG36KBTA5

Model: AUXG18KVLA

Outdoor temperature	Indoor temperature (°CDB / °CWB)											
	18.0 / 12.0		21.0 / 15.0		23.0 / 16.0		27.0 / 19.0		29.0 / 21.0		32.0 / 23.0	
(°CDB)	TC	SHC	TC	SHC	TC	SHC	TC	SHC	TC	SHC	TC	SHC
-10.0	4.85	2.94	5.48	3.35	5.78	3.86	6.19	4.33	6.62	4.74	6.82	5.43
-5.0	4.85	2.94	5.48	3.35	5.78	3.86	6.19	4.33	6.62	4.74	6.82	5.43
0.0	4.85	2.94	5.48	3.35	5.78	3.86	6.19	4.33	6.62	4.74	6.82	5.43
5.0	4.85	2.94	5.48	3.35	5.78	3.86	6.19	4.33	6.62	4.74	6.82	5.43
10.0	4.85	2.94	5.48	3.35	5.78	3.86	6.19	4.33	6.62	4.74	6.82	5.43
15.0	4.85	2.94	5.48	3.35	5.78	3.86	6.19	4.33	6.62	4.74	6.82	5.43
20.0	4.85	2.94	5.48	3.35	5.78	3.86	6.19	4.33	6.62	4.74	6.82	5.43
25.0	4.85	2.94	5.48	3.35	5.78	3.86	6.19	4.33	6.62	4.74	6.82	5.43
30.0	4.85	2.94	5.48	3.35	5.78	3.86	6.19	4.33	6.62	4.74	6.82	5.43
35.0	4.85	2.94	5.48	3.35	5.78	3.86	6.19	4.33	6.62	4.74	6.82	5.43
40.0	3.59	1.61	4.06	1.83	4.28	2.11	4.58	2.37	4.90	2.60	5.05	2.97
46.0	2.33	0.68	2.63	0.77	2.78	0.89	2.97	1.00	3.18	1.09	3.27	1.25

Model: AUXG22KVLA

Outdoor temperature	Indoor temperature (°CDB / °CWB)											
	18.0 / 12.0		21.0 / 15.0		23.0 / 16.0		27.0 / 19.0		29.0 / 21.0		32.0 / 23.0	
(°CDB)	TC	SHC	TC	SHC	TC	SHC	TC	SHC	TC	SHC	TC	SHC
-10.0	6.12	3.70	6.91	4.22	7.29	4.86	7.80	5.46	8.34	5.97	8.60	6.84
-5.0	6.12	3.70	6.91	4.22	7.29	4.86	7.80	5.46	8.34	5.97	8.60	6.84
0.0	6.12	3.70	6.91	4.22	7.29	4.86	7.80	5.46	8.34	5.97	8.60	6.84
5.0	6.12	3.70	6.91	4.22	7.29	4.86	7.80	5.46	8.34	5.97	8.60	6.84
10.0	6.12	3.70	6.91	4.22	7.29	4.86	7.80	5.46	8.34	5.97	8.60	6.84
15.0	6.12	3.70	6.91	4.22	7.29	4.86	7.80	5.46	8.34	5.97	8.60	6.84
20.0	6.12	3.70	6.91	4.22	7.29	4.86	7.80	5.46	8.34	5.97	8.60	6.84
25.0	6.12	3.70	6.91	4.22	7.29	4.86	7.80	5.46	8.34	5.97	8.60	6.84
30.0	6.12	3.70	6.91	4.22	7.29	4.86	7.80	5.46	8.34	5.97	8.60	6.84
35.0	6.12	3.70	6.91	4.22	7.29	4.86	7.80	5.46	8.34	5.97	8.60	6.84
40.0	4.53	2.03	5.11	2.31	5.39	2.66	5.77	2.99	6.17	3.27	6.36	3.75
46.0	2.94	0.85	3.32	0.97	3.50	1.12	3.74	1.26	4.00	1.38	4.13	1.58

NOTES:

- TC: Total Capacity (kW), SHC: Sensible Heat Capacity (kW)
- Values mentioned in the table are based on the following conditions:
  - Pipe length: 5 m, Height difference: 0 m (Outdoor unit—Indoor unit)

● Mini duct type

Model: ARXG07KSLAP

Outdoor temperature	Indoor temperature (°CDB / °CWB)											
	18.0 / 12.0		21.0 / 15.0		23.0 / 16.0		27.0 / 19.0		29.0 / 21.0		32.0 / 23.0	
(°CDB)	TC	SHC	TC	SHC	TC	SHC	TC	SHC	TC	SHC	TC	SHC
-10.0	1.96	1.36	2.22	1.55	2.34	1.78	2.50	2.00	2.67	2.19	2.76	2.51
-5.0	1.96	1.36	2.22	1.55	2.34	1.78	2.50	2.00	2.67	2.19	2.76	2.51
0.0	1.96	1.36	2.22	1.55	2.34	1.78	2.50	2.00	2.67	2.19	2.76	2.51
5.0	1.96	1.36	2.22	1.55	2.34	1.78	2.50	2.00	2.67	2.19	2.76	2.51
10.0	1.96	1.36	2.22	1.55	2.34	1.78	2.50	2.00	2.67	2.19	2.76	2.51
15.0	1.96	1.36	2.22	1.55	2.34	1.78	2.50	2.00	2.67	2.19	2.76	2.51
20.0	1.96	1.36	2.22	1.55	2.34	1.78	2.50	2.00	2.67	2.19	2.76	2.51
25.0	1.96	1.36	2.22	1.55	2.34	1.78	2.50	2.00	2.67	2.19	2.76	2.51
30.0	1.96	1.36	2.22	1.55	2.34	1.78	2.50	2.00	2.67	2.19	2.76	2.51
35.0	1.96	1.36	2.22	1.55	2.34	1.78	2.50	2.00	2.67	2.19	2.76	2.51
40.0	1.45	0.74	1.64	0.85	1.73	0.97	1.85	1.10	1.98	1.20	2.04	1.37
46.0	0.94	0.31	1.06	0.36	1.12	0.41	1.20	0.46	1.28	0.50	1.32	0.58

Model: ARXG09KSLAP

Outdoor temperature	Indoor temperature (°CDB / °CWB)											
	18.0 / 12.0		21.0 / 15.0		23.0 / 16.0		27.0 / 19.0		29.0 / 21.0		32.0 / 23.0	
(°CDB)	TC	SHC	TC	SHC	TC	SHC	TC	SHC	TC	SHC	TC	SHC
-10.0	2.51	1.61	2.84	1.83	2.99	2.11	3.20	2.37	3.42	2.59	3.53	2.97
-5.0	2.51	1.61	2.84	1.83	2.99	2.11	3.20	2.37	3.42	2.59	3.53	2.97
0.0	2.51	1.61	2.84	1.83	2.99	2.11	3.20	2.37	3.42	2.59	3.53	2.97
5.0	2.51	1.61	2.84	1.83	2.99	2.11	3.20	2.37	3.42	2.59	3.53	2.97
10.0	2.51	1.61	2.84	1.83	2.99	2.11	3.20	2.37	3.42	2.59	3.53	2.97
15.0	2.51	1.61	2.84	1.83	2.99	2.11	3.20	2.37	3.42	2.59	3.53	2.97
20.0	2.51	1.61	2.84	1.83	2.99	2.11	3.20	2.37	3.42	2.59	3.53	2.97
25.0	2.51	1.61	2.84	1.83	2.99	2.11	3.20	2.37	3.42	2.59	3.53	2.97
30.0	2.51	1.61	2.84	1.83	2.99	2.11	3.20	2.37	3.42	2.59	3.53	2.97
35.0	2.51	1.61	2.84	1.83	2.99	2.11	3.20	2.37	3.42	2.59	3.53	2.97
40.0	1.86	0.88	2.10	1.00	2.21	1.15	2.37	1.30	2.53	1.42	2.61	1.62
46.0	1.20	0.37	1.36	0.42	1.43	0.49	1.54	0.55	1.64	0.60	1.69	0.68

Model: ARXG12KSLAP

Outdoor temperature	Indoor temperature (°CDB / °CWB)											
	18.0 / 12.0		21.0 / 15.0		23.0 / 16.0		27.0 / 19.0		29.0 / 21.0		32.0 / 23.0	
(°CDB)	TC	SHC	TC	SHC	TC	SHC	TC	SHC	TC	SHC	TC	SHC
-10.0	3.37	2.16	3.81	2.46	4.02	2.83	4.30	3.18	4.60	3.48	4.74	3.99
-5.0	3.37	2.16	3.81	2.46	4.02	2.83	4.30	3.18	4.60	3.48	4.74	3.99
0.0	3.37	2.16	3.81	2.46	4.02	2.83	4.30	3.18	4.60	3.48	4.74	3.99
5.0	3.37	2.16	3.81	2.46	4.02	2.83	4.30	3.18	4.60	3.48	4.74	3.99
10.0	3.37	2.16	3.81	2.46	4.02	2.83	4.30	3.18	4.60	3.48	4.74	3.99
15.0	3.37	2.16	3.81	2.46	4.02	2.83	4.30	3.18	4.60	3.48	4.74	3.99
20.0	3.37	2.16	3.81	2.46	4.02	2.83	4.30	3.18	4.60	3.48	4.74	3.99
25.0	3.37	2.16	3.81	2.46	4.02	2.83	4.30	3.18	4.60	3.48	4.74	3.99
30.0	3.37	2.16	3.81	2.46	4.02	2.83	4.30	3.18	4.60	3.48	4.74	3.99
35.0	3.37	2.16	3.81	2.46	4.02	2.83	4.30	3.18	4.60	3.48	4.74	3.99
40.0	2.49	1.18	2.82	1.35	2.97	1.55	3.18	1.74	3.40	1.91	3.51	2.18
46.0	1.62	0.50	1.83	0.57	1.93	0.65	2.06	0.73	2.21	0.80	2.27	0.92

Model: ARXG14KSLAP

Outdoor temperature	Indoor temperature (°CDB / °CWB)											
	18.0 / 12.0		21.0 / 15.0		23.0 / 16.0		27.0 / 19.0		29.0 / 21.0		32.0 / 23.0	
(°CDB)	TC	SHC	TC	SHC	TC	SHC	TC	SHC	TC	SHC	TC	SHC
-10.0	3.92	2.41	4.43	2.74	4.67	3.16	5.00	3.55	5.35	3.88	5.51	4.45
-5.0	3.92	2.41	4.43	2.74	4.67	3.16	5.00	3.55	5.35	3.88	5.51	4.45
0.0	3.92	2.41	4.43	2.74	4.67	3.16	5.00	3.55	5.35	3.88	5.51	4.45
5.0	3.92	2.41	4.43	2.74	4.67	3.16	5.00	3.55	5.35	3.88	5.51	4.45
10.0	3.92	2.41	4.43	2.74	4.67	3.16	5.00	3.55	5.35	3.88	5.51	4.45
15.0	3.92	2.41	4.43	2.74	4.67	3.16	5.00	3.55	5.35	3.88	5.51	4.45
20.0	3.92	2.41	4.43	2.74	4.67	3.16	5.00	3.55	5.35	3.88	5.51	4.45
25.0	3.92	2.41	4.43	2.74	4.67	3.16	5.00	3.55	5.35	3.88	5.51	4.45
30.0	3.92	2.41	4.43	2.74	4.67	3.16	5.00	3.55	5.35	3.88	5.51	4.45
35.0	3.92	2.41	4.43	2.74	4.67	3.16	5.00	3.55	5.35	3.88	5.51	4.45
40.0	2.90	1.32	3.28	1.50	3.46	1.73	3.70	1.94	3.96	2.13	4.08	2.44
46.0	1.88	0.55	2.13	0.63	2.24	0.73	2.40	0.82	2.57	0.89	2.64	1.02

OUTDOOR UNIT
AOEG36KBTA5

Model: ARXG18KSLAP

Outdoor temperature	Indoor temperature (°CDB / °CWB)											
	18.0 / 12.0		21.0 / 15.0		23.0 / 16.0		27.0 / 19.0		29.0 / 21.0		32.0 / 23.0	
(°CDB)	TC	SHC	TC	SHC	TC	SHC	TC	SHC	TC	SHC	TC	SHC
-10.0	4.85	3.02	5.48	3.45	5.78	3.97	6.19	4.46	6.62	4.87	6.82	5.58
-5.0	4.85	3.02	5.48	3.45	5.78	3.97	6.19	4.46	6.62	4.87	6.82	5.58
0.0	4.85	3.02	5.48	3.45	5.78	3.97	6.19	4.46	6.62	4.87	6.82	5.58
5.0	4.85	3.02	5.48	3.45	5.78	3.97	6.19	4.46	6.62	4.87	6.82	5.58
10.0	4.85	3.02	5.48	3.45	5.78	3.97	6.19	4.46	6.62	4.87	6.82	5.58
15.0	4.85	3.02	5.48	3.45	5.78	3.97	6.19	4.46	6.62	4.87	6.82	5.58
20.0	4.85	3.02	5.48	3.45	5.78	3.97	6.19	4.46	6.62	4.87	6.82	5.58
25.0	4.85	3.02	5.48	3.45	5.78	3.97	6.19	4.46	6.62	4.87	6.82	5.58
30.0	4.85	3.02	5.48	3.45	5.78	3.97	6.19	4.46	6.62	4.87	6.82	5.58
35.0	4.85	3.02	5.48	3.45	5.78	3.97	6.19	4.46	6.62	4.87	6.82	5.58
40.0	3.59	1.66	4.06	1.89	4.28	2.17	4.58	2.44	4.90	2.67	5.05	3.06
46.0	2.33	0.70	2.63	0.79	2.78	0.91	2.97	1.03	3.18	1.12	3.27	1.29

NOTES:

- TC: Total Capacity (kW), SHC: Sensible Heat Capacity (kW)
- Values mentioned in the table are based on the following conditions:
  - Pipe length: 5 m, Height difference: 0 m [Outdoor unit—Indoor unit]

OUTDOOR UNIT
AOEG36KBTA5

● Slim duct type

Model: ARXG07KLLAP

Outdoor temperature	Indoor temperature (°CDB / °CWB)											
	18.0 / 12.0		21.0 / 15.0		23.0 / 16.0		27.0 / 19.0		29.0 / 21.0		32.0 / 23.0	
(°CDB)	TC	SHC	TC	SHC	TC	SHC	TC	SHC	TC	SHC	TC	SHC
-10.0	1.96	1.36	2.22	1.55	2.34	1.78	2.50	2.00	2.67	2.19	2.76	2.51
-5.0	1.96	1.36	2.22	1.55	2.34	1.78	2.50	2.00	2.67	2.19	2.76	2.51
0.0	1.96	1.36	2.22	1.55	2.34	1.78	2.50	2.00	2.67	2.19	2.76	2.51
5.0	1.96	1.36	2.22	1.55	2.34	1.78	2.50	2.00	2.67	2.19	2.76	2.51
10.0	1.96	1.36	2.22	1.55	2.34	1.78	2.50	2.00	2.67	2.19	2.76	2.51
15.0	1.96	1.36	2.22	1.55	2.34	1.78	2.50	2.00	2.67	2.19	2.76	2.51
20.0	1.96	1.36	2.22	1.55	2.34	1.78	2.50	2.00	2.67	2.19	2.76	2.51
25.0	1.96	1.36	2.22	1.55	2.34	1.78	2.50	2.00	2.67	2.19	2.76	2.51
30.0	1.96	1.36	2.22	1.55	2.34	1.78	2.50	2.00	2.67	2.19	2.76	2.51
35.0	1.96	1.36	2.22	1.55	2.34	1.78	2.50	2.00	2.67	2.19	2.76	2.51
40.0	1.45	0.74	1.64	0.85	1.73	0.97	1.85	1.10	1.98	1.20	2.04	1.37
46.0	0.94	0.31	1.06	0.36	1.12	0.41	1.20	0.46	1.28	0.50	1.32	0.58

Model: ARXG09KLLAP

Outdoor temperature	Indoor temperature (°CDB / °CWB)											
	18.0 / 12.0		21.0 / 15.0		23.0 / 16.0		27.0 / 19.0		29.0 / 21.0		32.0 / 23.0	
(°CDB)	TC	SHC	TC	SHC	TC	SHC	TC	SHC	TC	SHC	TC	SHC
-10.0	2.51	1.67	2.84	1.90	2.99	2.19	3.20	2.46	3.42	2.69	3.53	3.09
-5.0	2.51	1.67	2.84	1.90	2.99	2.19	3.20	2.46	3.42	2.69	3.53	3.09
0.0	2.51	1.67	2.84	1.90	2.99	2.19	3.20	2.46	3.42	2.69	3.53	3.09
5.0	2.51	1.67	2.84	1.90	2.99	2.19	3.20	2.46	3.42	2.69	3.53	3.09
10.0	2.51	1.67	2.84	1.90	2.99	2.19	3.20	2.46	3.42	2.69	3.53	3.09
15.0	2.51	1.67	2.84	1.90	2.99	2.19	3.20	2.46	3.42	2.69	3.53	3.09
20.0	2.51	1.67	2.84	1.90	2.99	2.19	3.20	2.46	3.42	2.69	3.53	3.09
25.0	2.51	1.67	2.84	1.90	2.99	2.19	3.20	2.46	3.42	2.69	3.53	3.09
30.0	2.51	1.67	2.84	1.90	2.99	2.19	3.20	2.46	3.42	2.69	3.53	3.09
35.0	2.51	1.67	2.84	1.90	2.99	2.19	3.20	2.46	3.42	2.69	3.53	3.09
40.0	1.86	0.92	2.10	1.04	2.21	1.20	2.37	1.35	2.53	1.48	2.61	1.69
46.0	1.20	0.38	1.36	0.44	1.43	0.51	1.54	0.57	1.64	0.62	1.69	0.71

Model: ARXG12KLLAP

Outdoor temperature	Indoor temperature (°CDB / °CWB)											
	18.0 / 12.0		21.0 / 15.0		23.0 / 16.0		27.0 / 19.0		29.0 / 21.0		32.0 / 23.0	
(°CDB)	TC	SHC	TC	SHC	TC	SHC	TC	SHC	TC	SHC	TC	SHC
-10.0	3.37	2.27	3.81	2.59	4.02	2.99	4.30	3.35	4.60	3.67	4.74	4.20
-5.0	3.37	2.27	3.81	2.59	4.02	2.99	4.30	3.35	4.60	3.67	4.74	4.20
0.0	3.37	2.27	3.81	2.59	4.02	2.99	4.30	3.35	4.60	3.67	4.74	4.20
5.0	3.37	2.27	3.81	2.59	4.02	2.99	4.30	3.35	4.60	3.67	4.74	4.20
10.0	3.37	2.27	3.81	2.59	4.02	2.99	4.30	3.35	4.60	3.67	4.74	4.20
15.0	3.37	2.27	3.81	2.59	4.02	2.99	4.30	3.35	4.60	3.67	4.74	4.20
20.0	3.37	2.27	3.81	2.59	4.02	2.99	4.30	3.35	4.60	3.67	4.74	4.20
25.0	3.37	2.27	3.81	2.59	4.02	2.99	4.30	3.35	4.60	3.67	4.74	4.20
30.0	3.37	2.27	3.81	2.59	4.02	2.99	4.30	3.35	4.60	3.67	4.74	4.20
35.0	3.37	2.27	3.81	2.59	4.02	2.99	4.30	3.35	4.60	3.67	4.74	4.20
40.0	2.49	1.25	2.82	1.42	2.97	1.63	3.18	1.84	3.40	2.01	3.51	2.30
46.0	1.62	0.52	1.83	0.60	1.93	0.69	2.06	0.77	2.21	0.85	2.27	0.97

Model: ARXG14KLLAP

Outdoor temperature	Indoor temperature (°CDB / °CWB)											
	18.0 / 12.0		21.0 / 15.0		23.0 / 16.0		27.0 / 19.0		29.0 / 21.0		32.0 / 23.0	
(°CDB)	TC	SHC	TC	SHC	TC	SHC	TC	SHC	TC	SHC	TC	SHC
-10.0	3.92	2.51	4.43	2.86	4.67	3.29	5.00	3.70	5.35	4.05	5.51	4.64
-5.0	3.92	2.51	4.43	2.86	4.67	3.29	5.00	3.70	5.35	4.05	5.51	4.64
0.0	3.92	2.51	4.43	2.86	4.67	3.29	5.00	3.70	5.35	4.05	5.51	4.64
5.0	3.92	2.51	4.43	2.86	4.67	3.29	5.00	3.70	5.35	4.05	5.51	4.64
10.0	3.92	2.51	4.43	2.86	4.67	3.29	5.00	3.70	5.35	4.05	5.51	4.64
15.0	3.92	2.51	4.43	2.86	4.67	3.29	5.00	3.70	5.35	4.05	5.51	4.64
20.0	3.92	2.51	4.43	2.86	4.67	3.29	5.00	3.70	5.35	4.05	5.51	4.64
25.0	3.92	2.51	4.43	2.86	4.67	3.29	5.00	3.70	5.35	4.05	5.51	4.64
30.0	3.92	2.51	4.43	2.86	4.67	3.29	5.00	3.70	5.35	4.05	5.51	4.64
35.0	3.92	2.51	4.43	2.86	4.67	3.29	5.00	3.70	5.35	4.05	5.51	4.64
40.0	2.90	1.37	3.28	1.57	3.46	1.80	3.70	2.03	3.96	2.22	4.08	2.54
46.0	1.88	0.58	2.13	0.66	2.24	0.76	2.40	0.85	2.57	0.93	2.64	1.07

OUTDOOR UNIT
AOEG36KBTA5

Model: ARXG18KLLAP

Outdoor temperature	Indoor temperature (°CDB / °CWB)											
	18.0 / 12.0		21.0 / 15.0		23.0 / 16.0		27.0 / 19.0		29.0 / 21.0		32.0 / 23.0	
(°CDB)	TC	SHC	TC	SHC	TC	SHC	TC	SHC	TC	SHC	TC	SHC
-10.0	4.80	2.99	5.42	3.41	5.72	3.92	6.12	4.41	6.54	4.82	6.74	5.52
-5.0	4.80	2.99	5.42	3.41	5.72	3.92	6.12	4.41	6.54	4.82	6.74	5.52
0.0	4.80	2.99	5.42	3.41	5.72	3.92	6.12	4.41	6.54	4.82	6.74	5.52
5.0	4.80	2.99	5.42	3.41	5.72	3.92	6.12	4.41	6.54	4.82	6.74	5.52
10.0	4.80	2.99	5.42	3.41	5.72	3.92	6.12	4.41	6.54	4.82	6.74	5.52
15.0	4.80	2.99	5.42	3.41	5.72	3.92	6.12	4.41	6.54	4.82	6.74	5.52
20.0	4.80	2.99	5.42	3.41	5.72	3.92	6.12	4.41	6.54	4.82	6.74	5.52
25.0	4.80	2.99	5.42	3.41	5.72	3.92	6.12	4.41	6.54	4.82	6.74	5.52
30.0	4.80	2.99	5.42	3.41	5.72	3.92	6.12	4.41	6.54	4.82	6.74	5.52
35.0	4.80	2.99	5.42	3.41	5.72	3.92	6.12	4.41	6.54	4.82	6.74	5.52
40.0	3.55	1.64	4.01	1.87	4.23	2.15	4.53	2.41	4.84	2.64	4.99	3.02
46.0	2.30	0.69	2.60	0.78	2.74	0.90	2.94	1.02	3.14	1.11	3.24	1.27

NOTES:

- TC: Total Capacity (kW), SHC: Sensible Heat Capacity (kW)
- Values mentioned in the table are based on the following conditions:
  - Pipe length: 5 m, Height difference: 0 m (Outdoor unit—Indoor unit)

● Medium static pressure duct type (ARXG22KMLB)

Model: ARXG22KMLB

Outdoor temperature	Indoor temperature (°CDB / °CWB)											
	18.0 / 12.0		21.0 / 15.0		23.0 / 16.0		27.0 / 19.0		29.0 / 21.0		32.0 / 23.0	
(°CDB)	TC	SHC	TC	SHC	TC	SHC	TC	SHC	TC	SHC	TC	SHC
-10.0	6.12	4.03	6.91	4.59	7.29	5.29	7.80	5.94	8.34	6.50	8.60	7.44
-5.0	6.12	4.03	6.91	4.59	7.29	5.29	7.80	5.94	8.34	6.50	8.60	7.44
0.0	6.12	4.03	6.91	4.59	7.29	5.29	7.80	5.94	8.34	6.50	8.60	7.44
5.0	6.12	4.03	6.91	4.59	7.29	5.29	7.80	5.94	8.34	6.50	8.60	7.44
10.0	6.12	4.03	6.91	4.59	7.29	5.29	7.80	5.94	8.34	6.50	8.60	7.44
15.0	6.12	4.03	6.91	4.59	7.29	5.29	7.80	5.94	8.34	6.50	8.60	7.44
20.0	6.12	4.03	6.91	4.59	7.29	5.29	7.80	5.94	8.34	6.50	8.60	7.44
25.0	6.12	4.03	6.91	4.59	7.29	5.29	7.80	5.94	8.34	6.50	8.60	7.44
30.0	6.12	4.03	6.91	4.59	7.29	5.29	7.80	5.94	8.34	6.50	8.60	7.44
35.0	6.12	4.03	6.91	4.59	7.29	5.29	7.80	5.94	8.34	6.50	8.60	7.44
40.0	4.53	2.21	5.11	2.52	5.39	2.90	5.77	3.25	6.17	3.56	6.36	4.08
46.0	2.94	0.93	3.32	1.06	3.50	1.22	3.74	1.37	4.00	1.50	4.13	1.72

NOTES:

- TC: Total Capacity (kW), SHC: Sensible Heat Capacity (kW).
- Values mentioned in the table are based on the following conditions:
  - Pipe length: 5 m, Height difference: 0 m (Outdoor unit—Indoor unit)

● Medium static pressure duct type (ARXH12–22KMTAP)

Model: ARXH12KMTAP

Outdoor temperature	Indoor temperature (°CDB / °CWB)											
	18.0 / 12.0		21.0 / 15.0		23.0 / 16.0		27.0 / 19.0		29.0 / 21.0		32.0 / 23.0	
(°CDB)	TC	SHC	TC	SHC	TC	SHC	TC	SHC	TC	SHC	TC	SHC
-10.0	3.37	2.27	3.81	2.59	4.02	2.99	4.30	3.35	4.60	3.67	4.74	4.20
-5.0	3.37	2.27	3.81	2.59	4.02	2.99	4.30	3.35	4.60	3.67	4.74	4.20
0.0	3.37	2.27	3.81	2.59	4.02	2.99	4.30	3.35	4.60	3.67	4.74	4.20
5.0	3.37	2.27	3.81	2.59	4.02	2.99	4.30	3.35	4.60	3.67	4.74	4.20
10.0	3.37	2.27	3.81	2.59	4.02	2.99	4.30	3.35	4.60	3.67	4.74	4.20
15.0	3.37	2.27	3.81	2.59	4.02	2.99	4.30	3.35	4.60	3.67	4.74	4.20
20.0	3.37	2.27	3.81	2.59	4.02	2.99	4.30	3.35	4.60	3.67	4.74	4.20
25.0	3.37	2.27	3.81	2.59	4.02	2.99	4.30	3.35	4.60	3.67	4.74	4.20
30.0	3.37	2.27	3.81	2.59	4.02	2.99	4.30	3.35	4.60	3.67	4.74	4.20
35.0	3.37	2.27	3.81	2.59	4.02	2.99	4.30	3.35	4.60	3.67	4.74	4.20
40.0	2.49	1.25	2.82	1.42	2.97	1.63	3.18	1.84	3.40	2.01	3.51	2.30
46.0	1.62	0.52	1.83	0.60	1.93	0.69	2.06	0.77	2.21	0.85	2.27	0.97

Model: ARXH14KMTAP

Outdoor temperature	Indoor temperature (°CDB / °CWB)											
	18.0 / 12.0		21.0 / 15.0		23.0 / 16.0		27.0 / 19.0		29.0 / 21.0		32.0 / 23.0	
(°CDB)	TC	SHC	TC	SHC	TC	SHC	TC	SHC	TC	SHC	TC	SHC
-0.0	3.92	2.63	4.43	2.99	4.67	3.44	5.00	3.87	5.35	4.24	5.51	4.86
-5.0	3.92	2.63	4.43	2.99	4.67	3.44	5.00	3.87	5.35	4.24	5.51	4.86
0.0	3.92	2.63	4.43	2.99	4.67	3.44	5.00	3.87	5.35	4.24	5.51	4.86
5.0	3.92	2.63	4.43	2.99	4.67	3.44	5.00	3.87	5.35	4.24	5.51	4.86
10.0	3.92	2.63	4.43	2.99	4.67	3.44	5.00	3.87	5.35	4.24	5.51	4.86
15.0	3.92	2.63	4.43	2.99	4.67	3.44	5.00	3.87	5.35	4.24	5.51	4.86
20.0	3.92	2.63	4.43	2.99	4.67	3.44	5.00	3.87	5.35	4.24	5.51	4.86
25.0	3.92	2.63	4.43	2.99	4.67	3.44	5.00	3.87	5.35	4.24	5.51	4.86
30.0	3.92	2.63	4.43	2.99	4.67	3.44	5.00	3.87	5.35	4.24	5.51	4.86
35.0	3.92	2.63	4.43	2.99	4.67	3.44	5.00	3.87	5.35	4.24	5.51	4.86
40.0	2.90	1.43	3.28	1.64	3.46	1.88	3.70	2.13	3.96	2.32	4.08	2.66
46.0	1.88	0.61	2.13	0.69	2.24	0.80	2.40	0.89	2.57	0.97	2.64	1.12

Model: ARXH18KMTAP

Outdoor temperature	Indoor temperature (°CDB / °CWB)											
	18.0 / 12.0		21.0 / 15.0		23.0 / 16.0		27.0 / 19.0		29.0 / 21.0		32.0 / 23.0	
(°CDB)	TC	SHC	TC	SHC	TC	SHC	TC	SHC	TC	SHC	TC	SHC
-10.0	4.80	2.99	5.42	3.41	5.72	3.92	6.12	4.41	6.54	4.82	6.74	5.52
-5.0	4.80	2.99	5.42	3.41	5.72	3.92	6.12	4.41	6.54	4.82	6.74	5.52
0.0	4.80	2.99	5.42	3.41	5.72	3.92	6.12	4.41	6.54	4.82	6.74	5.52
5.0	4.80	2.99	5.42	3.41	5.72	3.92	6.12	4.41	6.54	4.82	6.74	5.52
10.0	4.80	2.99	5.42	3.41	5.72	3.92	6.12	4.41	6.54	4.82	6.74	5.52
15.0	4.80	2.99	5.42	3.41	5.72	3.92	6.12	4.41	6.54	4.82	6.74	5.52
20.0	4.80	2.99	5.42	3.41	5.72	3.92	6.12	4.41	6.54	4.82	6.74	5.52
25.0	4.80	2.99	5.42	3.41	5.72	3.92	6.12	4.41	6.54	4.82	6.74	5.52
30.0	4.80	2.99	5.42	3.41	5.72	3.92	6.12	4.41	6.54	4.82	6.74	5.52
35.0	4.80	2.99	5.42	3.41	5.72	3.92	6.12	4.41	6.54	4.82	6.74	5.52
40.0	3.55	1.64	4.01	1.87	4.23	2.15	4.53	2.41	4.84	2.64	4.99	3.02
46.0	2.30	0.69	2.60	0.78	2.74	0.90	2.94	1.02	3.14	1.11	3.24	1.27

Model: ARXH22KMTAP

Outdoor temperature	Indoor temperature (°CDB / °CWB)											
	18.0 / 12.0		21.0 / 15.0		23.0 / 16.0		27.0 / 19.0		29.0 / 21.0		32.0 / 23.0	
(°CDB)	TC	SHC	TC	SHC	TC	SHC	TC	SHC	TC	SHC	TC	SHC
-10.0	6.12	4.39	6.91	5.00	7.29	5.76	7.80	6.47	8.34	7.08	8.60	8.11
-5.0	6.12	4.39	6.91	5.00	7.29	5.76	7.80	6.47	8.34	7.08	8.60	8.11
0.0	6.12	4.39	6.91	5.00	7.29	5.76	7.80	6.47	8.34	7.08	8.60	8.11
5.0	6.12	4.39	6.91	5.00	7.29	5.76	7.80	6.47	8.34	7.08	8.60	8.11
10.0	6.12	4.39	6.91	5.00	7.29	5.76	7.80	6.47	8.34	7.08	8.60	8.11
15.0	6.12	4.39	6.91	5.00	7.29	5.76	7.80	6.47	8.34	7.08	8.60	8.11
20.0	6.12	4.39	6.91	5.00	7.29	5.76	7.80	6.47	8.34	7.08	8.60	8.11
25.0	6.12	4.39	6.91	5.00	7.29	5.76	7.80	6.47	8.34	7.08	8.60	8.11
30.0	6.12	4.39	6.91	5.00	7.29	5.76	7.80	6.47	8.34	7.08	8.60	8.11
35.0	6.12	4.39	6.91	5.00	7.29	5.76	7.80	6.47	8.34	7.08	8.60	8.11
40.0	4.53	2.41	5.11	2.75	5.39	3.16	5.77	3.54	6.17	3.88	6.36	4.45
46.0	2.94	1.01	3.32	1.15	3.50	1.33	3.74	1.49	4.00	1.63	4.13	1.87

NOTES:

- TC: Total Capacity (kW), SHC: Sensible Heat Capacity (kW).
- Values mentioned in the table are based on the following conditions:
  - Pipe length: 5 m, Height difference: 0 m (Outdoor unit—Indoor unit)

OUTDOOR UNIT AOEG36KBTA5

● Wall mounted type

Model: ASEH07KMCG, ASEH07KMCG-B

Outdoor temperature	Indoor temperature (°CDB / °CWB)											
	18.0 / 12.0		21.0 / 15.0		23.0 / 16.0		27.0 / 19.0		29.0 / 21.0		32.0 / 23.0	
(°CDB)	TC	SHC	TC	SHC	TC	SHC	TC	SHC	TC	SHC	TC	SHC
-10.0	1.96	1.10	2.22	1.26	2.34	1.45	2.50	1.63	2.67	1.78	2.76	2.04
-5.0	1.96	1.10	2.22	1.26	2.34	1.45	2.50	1.63	2.67	1.78	2.76	2.04
0.0	1.96	1.10	2.22	1.26	2.34	1.45	2.50	1.63	2.67	1.78	2.76	2.04
5.0	1.96	1.10	2.22	1.26	2.34	1.45	2.50	1.63	2.67	1.78	2.76	2.04
10.0	1.96	1.10	2.22	1.26	2.34	1.45	2.50	1.63	2.67	1.78	2.76	2.04
15.0	1.96	1.10	2.22	1.26	2.34	1.45	2.50	1.63	2.67	1.78	2.76	2.04
20.0	1.96	1.10	2.22	1.26	2.34	1.45	2.50	1.63	2.67	1.78	2.76	2.04
25.0	1.96	1.10	2.22	1.26	2.34	1.45	2.50	1.63	2.67	1.78	2.76	2.04
30.0	1.96	1.10	2.22	1.26	2.34	1.45	2.50	1.63	2.67	1.78	2.76	2.04
35.0	1.96	1.10	2.22	1.26	2.34	1.45	2.50	1.63	2.67	1.78	2.76	2.04
40.0	1.45	0.60	1.64	0.69	1.73	0.79	1.85	0.89	1.98	0.97	2.04	1.12
46.0	0.94	0.25	1.06	0.29	1.12	0.33	1.20	0.37	1.28	0.41	1.32	0.47

Model: ASEH09KMCG, ASEH09KMCG-B

Outdoor temperature	Indoor temperature (°CDB / °CWB)											
	18.0 / 12.0		21.0 / 15.0		23.0 / 16.0		27.0 / 19.0		29.0 / 21.0		32.0 / 23.0	
(°CDB)	TC	SHC	TC	SHC	TC	SHC	TC	SHC	TC	SHC	TC	SHC
-10.0	2.51	1.41	2.84	1.61	2.99	1.85	3.20	2.08	3.42	2.27	3.53	2.61
-5.0	2.51	1.41	2.84	1.61	2.99	1.85	3.20	2.08	3.42	2.27	3.53	2.61
0.0	2.51	1.41	2.84	1.61	2.99	1.85	3.20	2.08	3.42	2.27	3.53	2.61
5.0	2.51	1.41	2.84	1.61	2.99	1.85	3.20	2.08	3.42	2.27	3.53	2.61
10.0	2.51	1.41	2.84	1.61	2.99	1.85	3.20	2.08	3.42	2.27	3.53	2.61
15.0	2.51	1.41	2.84	1.61	2.99	1.85	3.20	2.08	3.42	2.27	3.53	2.61
20.0	2.51	1.41	2.84	1.61	2.99	1.85	3.20	2.08	3.42	2.27	3.53	2.61
25.0	2.51	1.41	2.84	1.61	2.99	1.85	3.20	2.08	3.42	2.27	3.53	2.61
30.0	2.51	1.41	2.84	1.61	2.99	1.85	3.20	2.08	3.42	2.27	3.53	2.61
35.0	2.51	1.41	2.84	1.61	2.99	1.85	3.20	2.08	3.42	2.27	3.53	2.61
40.0	1.86	0.77	2.10	0.88	2.21	1.01	2.37	1.14	2.53	1.25	2.61	1.43
46.0	1.20	0.32	1.36	0.37	1.43	0.43	1.54	0.48	1.64	0.52	1.69	0.60

Model: ASEH12KMCG, ASEH12KMCG-B

Outdoor temperature	Indoor temperature (°CDB / °CWB)											
	18.0 / 12.0		21.0 / 15.0		23.0 / 16.0		27.0 / 19.0		29.0 / 21.0		32.0 / 23.0	
(°CDB)	TC	SHC	TC	SHC	TC	SHC	TC	SHC	TC	SHC	TC	SHC
-10.0	3.37	1.90	3.81	2.16	4.02	2.49	4.30	2.80	4.60	3.06	4.74	3.50
-5.0	3.37	1.90	3.81	2.16	4.02	2.49	4.30	2.80	4.60	3.06	4.74	3.50
0.0	3.37	1.90	3.81	2.16	4.02	2.49	4.30	2.80	4.60	3.06	4.74	3.50
5.0	3.37	1.90	3.81	2.16	4.02	2.49	4.30	2.80	4.60	3.06	4.74	3.50
10.0	3.37	1.90	3.81	2.16	4.02	2.49	4.30	2.80	4.60	3.06	4.74	3.50
15.0	3.37	1.90	3.81	2.16	4.02	2.49	4.30	2.80	4.60	3.06	4.74	3.50
20.0	3.37	1.90	3.81	2.16	4.02	2.49	4.30	2.80	4.60	3.06	4.74	3.50
25.0	3.37	1.90	3.81	2.16	4.02	2.49	4.30	2.80	4.60	3.06	4.74	3.50
30.0	3.37	1.90	3.81	2.16	4.02	2.49	4.30	2.80	4.60	3.06	4.74	3.50
35.0	3.37	1.90	3.81	2.16	4.02	2.49	4.30	2.80	4.60	3.06	4.74	3.50
40.0	2.49	1.04	2.82	1.18	2.97	1.36	3.18	1.53	3.40	1.67	3.51	1.92
46.0	1.62	0.44	1.83	0.50	1.93	0.57	2.06	0.64	2.21	0.70	2.27	0.81

Model: ASEH14KMCG, ASEH14KMCG-B

Outdoor temperature	Indoor temperature (°CDB / °CWB)											
	18.0 / 12.0		21.0 / 15.0		23.0 / 16.0		27.0 / 19.0		29.0 / 21.0		32.0 / 23.0	
(°CDB)	TC	SHC	TC	SHC	TC	SHC	TC	SHC	TC	SHC	TC	SHC
-10.0	3.92	2.20	4.43	2.51	4.67	2.89	5.00	3.25	5.35	3.55	5.51	4.07
-5.0	3.92	2.20	4.43	2.51	4.67	2.89	5.00	3.25	5.35	3.55	5.51	4.07
0.0	3.92	2.20	4.43	2.51	4.67	2.89	5.00	3.25	5.35	3.55	5.51	4.07
5.0	3.92	2.20	4.43	2.51	4.67	2.89	5.00	3.25	5.35	3.55	5.51	4.07
10.0	3.92	2.20	4.43	2.51	4.67	2.89	5.00	3.25	5.35	3.55	5.51	4.07
15.0	3.92	2.20	4.43	2.51	4.67	2.89	5.00	3.25	5.35	3.55	5.51	4.07
20.0	3.92	2.20	4.43	2.51	4.67	2.89	5.00	3.25	5.35	3.55	5.51	4.07
25.0	3.92	2.20	4.43	2.51	4.67	2.89	5.00	3.25	5.35	3.55	5.51	4.07
30.0	3.92	2.20	4.43	2.51	4.67	2.89	5.00	3.25	5.35	3.55	5.51	4.07
35.0	3.92	2.20	4.43	2.51	4.67	2.89	5.00	3.25	5.35	3.55	5.51	4.07
40.0	2.90	1.21	3.28	1.38	3.46	1.58	3.70	1.78	3.96	1.95	4.08	2.23
46.0	1.88	0.51	2.13	0.58	2.24	0.67	2.40	0.75	2.57	0.82	2.64	0.94

OUTDOOR UNIT
AOEG36KBTA5

Model: ASEG07KETF, ASEG07KETF-B

Outdoor temperature	Indoor temperature (°CDB / °CWB)											
	18.0 / 12.0		21.0 / 15.0		23.0 / 16.0		27.0 / 19.0		29.0 / 21.0		32.0 / 23.0	
(°CDB)	TC	SHC	TC	SHC	TC	SHC	TC	SHC	TC	SHC	TC	SHC
-10.0	1.96	1.10	2.22	1.26	2.34	1.45	2.50	1.63	2.67	1.78	2.76	2.04
-5.0	1.96	1.10	2.22	1.26	2.34	1.45	2.50	1.63	2.67	1.78	2.76	2.04
0.0	1.96	1.10	2.22	1.26	2.34	1.45	2.50	1.63	2.67	1.78	2.76	2.04
5.0	1.96	1.10	2.22	1.26	2.34	1.45	2.50	1.63	2.67	1.78	2.76	2.04
10.0	1.96	1.10	2.22	1.26	2.34	1.45	2.50	1.63	2.67	1.78	2.76	2.04
15.0	1.96	1.10	2.22	1.26	2.34	1.45	2.50	1.63	2.67	1.78	2.76	2.04
20.0	1.96	1.10	2.22	1.26	2.34	1.45	2.50	1.63	2.67	1.78	2.76	2.04
25.0	1.96	1.10	2.22	1.26	2.34	1.45	2.50	1.63	2.67	1.78	2.76	2.04
30.0	1.96	1.10	2.22	1.26	2.34	1.45	2.50	1.63	2.67	1.78	2.76	2.04
35.0	1.96	1.10	2.22	1.26	2.34	1.45	2.50	1.63	2.67	1.78	2.76	2.04
40.0	1.45	0.60	1.64	0.69	1.73	0.79	1.85	0.89	1.98	0.97	2.04	1.12
46.0	0.94	0.25	1.06	0.29	1.12	0.33	1.20	0.37	1.28	0.41	1.32	0.47

Model: ASEG09KETF, ASEG09KETF-B

Outdoor temperature	Indoor temperature (°CDB / °CWB)											
	18.0 / 12.0		21.0 / 15.0		23.0 / 16.0		27.0 / 19.0		29.0 / 21.0		32.0 / 23.0	
(°CDB)	TC	SHC	TC	SHC	TC	SHC	TC	SHC	TC	SHC	TC	SHC
-10.0	2.51	1.41	2.84	1.61	2.99	1.85	3.20	2.08	3.42	2.27	3.53	2.61
-5.0	2.51	1.41	2.84	1.61	2.99	1.85	3.20	2.08	3.42	2.27	3.53	2.61
0.0	2.51	1.41	2.84	1.61	2.99	1.85	3.20	2.08	3.42	2.27	3.53	2.61
5.0	2.51	1.41	2.84	1.61	2.99	1.85	3.20	2.08	3.42	2.27	3.53	2.61
10.0	2.51	1.41	2.84	1.61	2.99	1.85	3.20	2.08	3.42	2.27	3.53	2.61
15.0	2.51	1.41	2.84	1.61	2.99	1.85	3.20	2.08	3.42	2.27	3.53	2.61
20.0	2.51	1.41	2.84	1.61	2.99	1.85	3.20	2.08	3.42	2.27	3.53	2.61
25.0	2.51	1.41	2.84	1.61	2.99	1.85	3.20	2.08	3.42	2.27	3.53	2.61
30.0	2.51	1.41	2.84	1.61	2.99	1.85	3.20	2.08	3.42	2.27	3.53	2.61
35.0	2.51	1.41	2.84	1.61	2.99	1.85	3.20	2.08	3.42	2.27	3.53	2.61
40.0	1.86	0.77	2.10	0.88	2.21	1.01	2.37	1.14	2.53	1.25	2.61	1.43
46.0	1.20	0.32	1.36	0.37	1.43	0.43	1.54	0.48	1.64	0.52	1.69	0.60

Model: ASEG12KETF, ASEG12KETF-B

Outdoor temperature	Indoor temperature (°CDB / °CWB)											
	18.0 / 12.0		21.0 / 15.0		23.0 / 16.0		27.0 / 19.0		29.0 / 21.0		32.0 / 23.0	
(°CDB)	TC	SHC	TC	SHC	TC	SHC	TC	SHC	TC	SHC	TC	SHC
-10.0	3.37	1.90	3.81	2.16	4.02	2.49	4.30	2.80	4.60	3.06	4.74	3.50
-5.0	3.37	1.90	3.81	2.16	4.02	2.49	4.30	2.80	4.60	3.06	4.74	3.50
0.0	3.37	1.90	3.81	2.16	4.02	2.49	4.30	2.80	4.60	3.06	4.74	3.50
5.0	3.37	1.90	3.81	2.16	4.02	2.49	4.30	2.80	4.60	3.06	4.74	3.50
10.0	3.37	1.90	3.81	2.16	4.02	2.49	4.30	2.80	4.60	3.06	4.74	3.50
15.0	3.37	1.90	3.81	2.16	4.02	2.49	4.30	2.80	4.60	3.06	4.74	3.50
20.0	3.37	1.90	3.81	2.16	4.02	2.49	4.30	2.80	4.60	3.06	4.74	3.50
25.0	3.37	1.90	3.81	2.16	4.02	2.49	4.30	2.80	4.60	3.06	4.74	3.50
30.0	3.37	1.90	3.81	2.16	4.02	2.49	4.30	2.80	4.60	3.06	4.74	3.50
35.0	3.37	1.90	3.81	2.16	4.02	2.49	4.30	2.80	4.60	3.06	4.74	3.50
40.0	2.49	1.04	2.82	1.18	2.97	1.36	3.18	1.53	3.40	1.67	3.51	1.92
46.0	1.62	0.44	1.83	0.50	1.93	0.57	2.06	0.64	2.21	0.70	2.27	0.81

Model: ASEG14KETF, ASEG14KETF-B

Outdoor temperature	Indoor temperature (°CDB / °CWB)											
	18.0 / 12.0		21.0 / 15.0		23.0 / 16.0		27.0 / 19.0		29.0 / 21.0		32.0 / 23.0	
(°CDB)	TC	SHC	TC	SHC	TC	SHC	TC	SHC	TC	SHC	TC	SHC
-10.0	3.92	2.20	4.43	2.51	4.67	2.89	5.00	3.25	5.35	3.55	5.51	4.07
-5.0	3.92	2.20	4.43	2.51	4.67	2.89	5.00	3.25	5.35	3.55	5.51	4.07
0.0	3.92	2.20	4.43	2.51	4.67	2.89	5.00	3.25	5.35	3.55	5.51	4.07
5.0	3.92	2.20	4.43	2.51	4.67	2.89	5.00	3.25	5.35	3.55	5.51	4.07
10.0	3.92	2.20	4.43	2.51	4.67	2.89	5.00	3.25	5.35	3.55	5.51	4.07
15.0	3.92	2.20	4.43	2.51	4.67	2.89	5.00	3.25	5.35	3.55	5.51	4.07
20.0	3.92	2.20	4.43	2.51	4.67	2.89	5.00	3.25	5.35	3.55	5.51	4.07
25.0	3.92	2.20	4.43	2.51	4.67	2.89	5.00	3.25	5.35	3.55	5.51	4.07
30.0	3.92	2.20	4.43	2.51	4.67	2.89	5.00	3.25	5.35	3.55	5.51	4.07
35.0	3.92	2.20	4.43	2.51	4.67	2.89	5.00	3.25	5.35	3.55	5.51	4.07
40.0	2.90	1.21	3.28	1.38	3.46	1.58	3.70	1.78	3.96	1.95	4.08	2.23
46.0	1.88	0.51	2.13	0.58	2.24	0.67	2.40	0.75	2.57	0.82	2.64	0.94

Model: ASEH07KGTG

Outdoor temperature	Indoor temperature (°CDB / °CWB)											
	18.0 / 12.0		21.0 / 15.0		23.0 / 16.0		27.0 / 19.0		29.0 / 21.0		32.0 / 23.0	
(°CDB)	TC	SHC	TC	SHC	TC	SHC	TC	SHC	TC	SHC	TC	SHC
-10.0	1.96	1.10	2.22	1.26	2.34	1.45	2.50	1.63	2.67	1.78	2.76	2.04
-5.0	1.96	1.10	2.22	1.26	2.34	1.45	2.50	1.63	2.67	1.78	2.76	2.04
0.0	1.96	1.10	2.22	1.26	2.34	1.45	2.50	1.63	2.67	1.78	2.76	2.04
5.0	1.96	1.10	2.22	1.26	2.34	1.45	2.50	1.63	2.67	1.78	2.76	2.04
10.0	1.96	1.10	2.22	1.26	2.34	1.45	2.50	1.63	2.67	1.78	2.76	2.04
15.0	1.96	1.10	2.22	1.26	2.34	1.45	2.50	1.63	2.67	1.78	2.76	2.04
20.0	1.96	1.10	2.22	1.26	2.34	1.45	2.50	1.63	2.67	1.78	2.76	2.04
25.0	1.96	1.10	2.22	1.26	2.34	1.45	2.50	1.63	2.67	1.78	2.76	2.04
30.0	1.96	1.10	2.22	1.26	2.34	1.45	2.50	1.63	2.67	1.78	2.76	2.04
35.0	1.96	1.10	2.22	1.26	2.34	1.45	2.50	1.63	2.67	1.78	2.76	2.04
40.0	1.45	0.60	1.64	0.69	1.73	0.79	1.85	0.89	1.98	0.97	2.04	1.12
46.0	0.94	0.25	1.06	0.29	1.12	0.33	1.20	0.37	1.28	0.41	1.32	0.47

Model: ASEH09KGTG

Outdoor temperature	Indoor temperature (°CDB / °CWB)											
	18.0 / 12.0		21.0 / 15.0		23.0 / 16.0		27.0 / 19.0		29.0 / 21.0		32.0 / 23.0	
(°CDB)	TC	SHC	TC	SHC	TC	SHC	TC	SHC	TC	SHC	TC	SHC
-10.0	2.51	1.41	2.84	1.61	2.99	1.85	3.20	2.08	3.42	2.27	3.53	2.61
-5.0	2.51	1.41	2.84	1.61	2.99	1.85	3.20	2.08	3.42	2.27	3.53	2.61
0.0	2.51	1.41	2.84	1.61	2.99	1.85	3.20	2.08	3.42	2.27	3.53	2.61
5.0	2.51	1.41	2.84	1.61	2.99	1.85	3.20	2.08	3.42	2.27	3.53	2.61
10.0	2.51	1.41	2.84	1.61	2.99	1.85	3.20	2.08	3.42	2.27	3.53	2.61
15.0	2.51	1.41	2.84	1.61	2.99	1.85	3.20	2.08	3.42	2.27	3.53	2.61
20.0	2.51	1.41	2.84	1.61	2.99	1.85	3.20	2.08	3.42	2.27	3.53	2.61
25.0	2.51	1.41	2.84	1.61	2.99	1.85	3.20	2.08	3.42	2.27	3.53	2.61
30.0	2.51	1.41	2.84	1.61	2.99	1.85	3.20	2.08	3.42	2.27	3.53	2.61
35.0	2.51	1.41	2.84	1.61	2.99	1.85	3.20	2.08	3.42	2.27	3.53	2.61
40.0	1.86	0.77	2.10	0.88	2.21	1.01	2.37	1.14	2.53	1.25	2.61	1.43
46.0	1.20	0.32	1.36	0.37	1.43	0.43	1.54	0.48	1.64	0.52	1.69	0.60

Model: ASEH12KGTG

Outdoor temperature	Indoor temperature (°CDB / °CWB)											
	18.0 / 12.0		21.0 / 15.0		23.0 / 16.0		27.0 / 19.0		29.0 / 21.0		32.0 / 23.0	
(°CDB)	TC	SHC	TC	SHC	TC	SHC	TC	SHC	TC	SHC	TC	SHC
-10.0	3.37	1.90	3.81	2.16	4.02	2.49	4.30	2.80	4.60	3.06	4.74	3.50
-5.0	3.37	1.90	3.81	2.16	4.02	2.49	4.30	2.80	4.60	3.06	4.74	3.50
0.0	3.37	1.90	3.81	2.16	4.02	2.49	4.30	2.80	4.60	3.06	4.74	3.50
5.0	3.37	1.90	3.81	2.16	4.02	2.49	4.30	2.80	4.60	3.06	4.74	3.50
10.0	3.37	1.90	3.81	2.16	4.02	2.49	4.30	2.80	4.60	3.06	4.74	3.50
15.0	3.37	1.90	3.81	2.16	4.02	2.49	4.30	2.80	4.60	3.06	4.74	3.50
20.0	3.37	1.90	3.81	2.16	4.02	2.49	4.30	2.80	4.60	3.06	4.74	3.50
25.0	3.37	1.90	3.81	2.16	4.02	2.49	4.30	2.80	4.60	3.06	4.74	3.50
30.0	3.37	1.90	3.81	2.16	4.02	2.49	4.30	2.80	4.60	3.06	4.74	3.50
35.0	3.37	1.90	3.81	2.16	4.02	2.49	4.30	2.80	4.60	3.06	4.74	3.50
40.0	2.49	1.04	2.82	1.18	2.97	1.36	3.18	1.53	3.40	1.67	3.51	1.92
46.0	1.62	0.44	1.83	0.50	1.93	0.57	2.06	0.64	2.21	0.70	2.27	0.81

Model: ASEH14KGTG

Outdoor temperature	Indoor temperature (°CDB / °CWB)											
	18.0 / 12.0		21.0 / 15.0		23.0 / 16.0		27.0 / 19.0		29.0 / 21.0		32.0 / 23.0	
(°CDB)	TC	SHC	TC	SHC	TC	SHC	TC	SHC	TC	SHC	TC	SHC
-10.0	3.92	2.20	4.43	2.51	4.67	2.89	5.00	3.25	5.35	3.55	5.51	4.07
-5.0	3.92	2.20	4.43	2.51	4.67	2.89	5.00	3.25	5.35	3.55	5.51	4.07
0.0	3.92	2.20	4.43	2.51	4.67	2.89	5.00	3.25	5.35	3.55	5.51	4.07
5.0	3.92	2.20	4.43	2.51	4.67	2.89	5.00	3.25	5.35	3.55	5.51	4.07
10.0	3.92	2.20	4.43	2.51	4.67	2.89	5.00	3.25	5.35	3.55	5.51	4.07
15.0	3.92	2.20	4.43	2.51	4.67	2.89	5.00	3.25	5.35	3.55	5.51	4.07
20.0	3.92	2.20	4.43	2.51	4.67	2.89	5.00	3.25	5.35	3.55	5.51	4.07
25.0	3.92	2.20	4.43	2.51	4.67	2.89	5.00	3.25	5.35	3.55	5.51	4.07
30.0	3.92	2.20	4.43	2.51	4.67	2.89	5.00	3.25	5.35	3.55	5.51	4.07
35.0	3.92	2.20	4.43	2.51	4.67	2.89	5.00	3.25	5.35	3.55	5.51	4.07
40.0	2.90	1.21	3.28	1.38	3.46	1.58	3.70	1.78	3.96	1.95	4.08	2.23
46.0	1.88	0.51	2.13	0.58	2.24	0.67	2.40	0.75	2.57	0.82	2.64	0.94

Model: ASEH05KNCA

Outdoor temperature	Indoor temperature (°CDB / °CWB)											
	18.0 / 12.0		21.0 / 15.0		23.0 / 16.0		27.0 / 19.0		29.0 / 21.0		32.0 / 23.0	
(°CDB)	TC	SHC	TC	SHC	TC	SHC	TC	SHC	TC	SHC	TC	SHC
-10.0	1.41	0.79	1.59	0.90	1.68	1.04	1.80	1.17	1.92	1.28	1.98	1.47
-5.0	1.41	0.79	1.59	0.90	1.68	1.04	1.80	1.17	1.92	1.28	1.98	1.47
0.0	1.41	0.79	1.59	0.90	1.68	1.04	1.80	1.17	1.92	1.28	1.98	1.47
5.0	1.41	0.79	1.59	0.90	1.68	1.04	1.80	1.17	1.92	1.28	1.98	1.47
10.0	1.41	0.79	1.59	0.90	1.68	1.04	1.80	1.17	1.92	1.28	1.98	1.47
15.0	1.41	0.79	1.59	0.90	1.68	1.04	1.80	1.17	1.92	1.28	1.98	1.47
20.0	1.41	0.79	1.59	0.90	1.68	1.04	1.80	1.17	1.92	1.28	1.98	1.47
25.0	1.41	0.79	1.59	0.90	1.68	1.04	1.80	1.17	1.92	1.28	1.98	1.47
30.0	1.41	0.79	1.59	0.90	1.68	1.04	1.80	1.17	1.92	1.28	1.98	1.47
35.0	1.41	0.79	1.59	0.90	1.68	1.04	1.80	1.17	1.92	1.28	1.98	1.47
40.0	1.04	0.43	1.18	0.50	1.24	0.57	1.33	0.64	1.42	0.70	1.47	0.80
46.0	0.68	0.18	0.77	0.21	0.81	0.24	0.86	0.27	0.92	0.29	0.95	0.34

Model: ASEH07KNCA

Outdoor temperature	Indoor temperature (°CDB / °CWB)											
	18.0 / 12.0		21.0 / 15.0		23.0 / 16.0		27.0 / 19.0		29.0 / 21.0		32.0 / 23.0	
(°CDB)	TC	SHC	TC	SHC	TC	SHC	TC	SHC	TC	SHC	TC	SHC
-10.0	1.96	1.10	2.22	1.26	2.34	1.45	2.50	1.63	2.67	1.78	2.76	2.04
-5.0	1.96	1.10	2.22	1.26	2.34	1.45	2.50	1.63	2.67	1.78	2.76	2.04
0.0	1.96	1.10	2.22	1.26	2.34	1.45	2.50	1.63	2.67	1.78	2.76	2.04
5.0	1.96	1.10	2.22	1.26	2.34	1.45	2.50	1.63	2.67	1.78	2.76	2.04
10.0	1.96	1.10	2.22	1.26	2.34	1.45	2.50	1.63	2.67	1.78	2.76	2.04
15.0	1.96	1.10	2.22	1.26	2.34	1.45	2.50	1.63	2.67	1.78	2.76	2.04
20.0	1.96	1.10	2.22	1.26	2.34	1.45	2.50	1.63	2.67	1.78	2.76	2.04
25.0	1.96	1.10	2.22	1.26	2.34	1.45	2.50	1.63	2.67	1.78	2.76	2.04
30.0	1.96	1.10	2.22	1.26	2.34	1.45	2.50	1.63	2.67	1.78	2.76	2.04
35.0	1.96	1.10	2.22	1.26	2.34	1.45	2.50	1.63	2.67	1.78	2.76	2.04
40.0	1.45	0.60	1.64	0.69	1.73	0.79	1.85	0.89	1.98	0.97	2.04	1.12
46.0	0.94	0.25	1.06	0.29	1.12	0.33	1.20	0.37	1.28	0.41	1.32	0.47

Model: ASEH09KNCA

Outdoor temperature	Indoor temperature (°CDB / °CWB)											
	18.0 / 12.0		21.0 / 15.0		23.0 / 16.0		27.0 / 19.0		29.0 / 21.0		32.0 / 23.0	
(°CDB)	TC	SHC	TC	SHC	TC	SHC	TC	SHC	TC	SHC	TC	SHC
-10.0	2.51	1.41	2.84	1.61	2.99	1.85	3.20	2.08	3.42	2.27	3.53	2.61
-5.0	2.51	1.41	2.84	1.61	2.99	1.85	3.20	2.08	3.42	2.27	3.53	2.61
0.0	2.51	1.41	2.84	1.61	2.99	1.85	3.20	2.08	3.42	2.27	3.53	2.61
5.0	2.51	1.41	2.84	1.61	2.99	1.85	3.20	2.08	3.42	2.27	3.53	2.61
10.0	2.51	1.41	2.84	1.61	2.99	1.85	3.20	2.08	3.42	2.27	3.53	2.61
15.0	2.51	1.41	2.84	1.61	2.99	1.85	3.20	2.08	3.42	2.27	3.53	2.61
20.0	2.51	1.41	2.84	1.61	2.99	1.85	3.20	2.08	3.42	2.27	3.53	2.61
25.0	2.51	1.41	2.84	1.61	2.99	1.85	3.20	2.08	3.42	2.27	3.53	2.61
30.0	2.51	1.41	2.84	1.61	2.99	1.85	3.20	2.08	3.42	2.27	3.53	2.61
35.0	2.51	1.41	2.84	1.61	2.99	1.85	3.20	2.08	3.42	2.27	3.53	2.61
40.0	1.86	0.77	2.10	0.88	2.21	1.01	2.37	1.14	2.53	1.25	2.61	1.43
46.0	1.20	0.32	1.36	0.37	1.43	0.43	1.54	0.48	1.64	0.52	1.69	0.60

Model: ASEH12KNCA

Outdoor temperature	Indoor temperature (°CDB / °CWB)											
	18.0 / 12.0		21.0 / 15.0		23.0 / 16.0		27.0 / 19.0		29.0 / 21.0		32.0 / 23.0	
(°CDB)	TC	SHC	TC	SHC	TC	SHC	TC	SHC	TC	SHC	TC	SHC
-10.0	2.82	1.59	3.19	1.81	3.36	2.08	3.60	2.34	3.85	2.56	3.97	2.93
-5.0	2.82	1.59	3.19	1.81	3.36	2.08	3.60	2.34	3.85	2.56	3.97	2.93
0.0	2.82	1.59	3.19	1.81	3.36	2.08	3.60	2.34	3.85	2.56	3.97	2.93
5.0	2.82	1.59	3.19	1.81	3.36	2.08	3.60	2.34	3.85	2.56	3.97	2.93
10.0	2.82	1.59	3.19	1.81	3.36	2.08	3.60	2.34	3.85	2.56	3.97	2.93
15.0	2.82	1.59	3.19	1.81	3.36	2.08	3.60	2.34	3.85	2.56	3.97	2.93
20.0	2.82	1.59	3.19	1.81	3.36	2.08	3.60	2.34	3.85	2.56	3.97	2.93
25.0	2.82	1.59	3.19	1.81	3.36	2.08	3.60	2.34	3.85	2.56	3.97	2.93
30.0	2.82	1.59	3.19	1.81	3.36	2.08	3.60	2.34	3.85	2.56	3.97	2.93
35.0	2.82	1.59	3.19	1.81	3.36	2.08	3.60	2.34	3.85	2.56	3.97	2.93
40.0	2.09	0.87	2.36	0.99	2.49	1.14	2.66	1.28	2.85	1.40	2.94	1.61
46.0	1.35	0.37	1.53	0.42	1.61	0.48	1.73	0.54	1.85	0.59	1.90	0.68

Model: ASEG18KMTE

Outdoor temperature	Indoor temperature (°CDB / °CWB)											
	18.0 / 12.0		21.0 / 15.0		23.0 / 16.0		27.0 / 19.0		29.0 / 21.0		32.0 / 23.0	
(°CDB)	TC	SHC	TC	SHC	TC	SHC	TC	SHC	TC	SHC	TC	SHC
-10.0	4.85	3.27	5.48	3.73	5.78	4.30	6.19	4.83	6.62	5.28	6.82	6.05
-5.0	4.85	3.27	5.48	3.73	5.78	4.30	6.19	4.83	6.62	5.28	6.82	6.05
0.0	4.85	3.27	5.48	3.73	5.78	4.30	6.19	4.83	6.62	5.28	6.82	6.05
5.0	4.85	3.27	5.48	3.73	5.78	4.30	6.19	4.83	6.62	5.28	6.82	6.05
10.0	4.85	3.27	5.48	3.73	5.78	4.30	6.19	4.83	6.62	5.28	6.82	6.05
15.0	4.85	3.27	5.48	3.73	5.78	4.30	6.19	4.83	6.62	5.28	6.82	6.05
20.0	4.85	3.27	5.48	3.73	5.78	4.30	6.19	4.83	6.62	5.28	6.82	6.05
25.0	4.85	3.27	5.48	3.73	5.78	4.30	6.19	4.83	6.62	5.28	6.82	6.05
30.0	4.85	3.27	5.48	3.73	5.78	4.30	6.19	4.83	6.62	5.28	6.82	6.05
35.0	4.85	3.27	5.48	3.73	5.78	4.30	6.19	4.83	6.62	5.28	6.82	6.05
40.0	3.59	1.79	4.06	2.04	4.28	2.35	4.58	2.64	4.90	2.89	5.05	3.31
46.0	2.33	0.75	2.63	0.86	2.78	0.99	2.97	1.11	3.18	1.22	3.27	1.39

Model: ASEG22KMTE

Outdoor temperature	Indoor temperature (°CDB / °CWB)											
	18.0 / 12.0		21.0 / 15.0		23.0 / 16.0		27.0 / 19.0		29.0 / 21.0		32.0 / 23.0	
(°CDB)	TC	SHC	TC	SHC	TC	SHC	TC	SHC	TC	SHC	TC	SHC
-10.0	6.12	3.93	6.91	4.48	7.29	5.16	7.80	5.80	8.34	6.34	8.60	7.27
-5.0	6.12	3.93	6.91	4.48	7.29	5.16	7.80	5.80	8.34	6.34	8.60	7.27
0.0	6.12	3.93	6.91	4.48	7.29	5.16	7.80	5.80	8.34	6.34	8.60	7.27
5.0	6.12	3.93	6.91	4.48	7.29	5.16	7.80	5.80	8.34	6.34	8.60	7.27
10.0	6.12	3.93	6.91	4.48	7.29	5.16	7.80	5.80	8.34	6.34	8.60	7.27
15.0	6.12	3.93	6.91	4.48	7.29	5.16	7.80	5.80	8.34	6.34	8.60	7.27
20.0	6.12	3.93	6.91	4.48	7.29	5.16	7.80	5.80	8.34	6.34	8.60	7.27
25.0	6.12	3.93	6.91	4.48	7.29	5.16	7.80	5.80	8.34	6.34	8.60	7.27
30.0	6.12	3.93	6.91	4.48	7.29	5.16	7.80	5.80	8.34	6.34	8.60	7.27
35.0	6.12	3.93	6.91	4.48	7.29	5.16	7.80	5.80	8.34	6.34	8.60	7.27
40.0	4.53	2.15	5.11	2.45	5.39	2.83	5.77	3.17	6.17	3.47	6.36	3.98
46.0	2.94	0.91	3.32	1.03	3.50	1.19	3.74	1.34	4.00	1.46	4.13	1.67

Model: ASEG24KMTE

Outdoor temperature	Indoor temperature (°CDB / °CWB)											
	18.0 / 12.0		21.0 / 15.0		23.0 / 16.0		27.0 / 19.0		29.0 / 21.0		32.0 / 23.0	
(°CDB)	TC	SHC	TC	SHC	TC	SHC	TC	SHC	TC	SHC	TC	SHC
-10.0	6.68	4.31	7.55	4.92	7.96	5.66	8.52	6.36	9.11	6.96	9.39	7.97
-5.0	6.68	4.31	7.55	4.92	7.96	5.66	8.52	6.36	9.11	6.96	9.39	7.97
0.0	6.68	4.31	7.55	4.92	7.96	5.66	8.52	6.36	9.11	6.96	9.39	7.97
5.0	6.68	4.31	7.55	4.92	7.96	5.66	8.52	6.36	9.11	6.96	9.39	7.97
10.0	6.68	4.31	7.55	4.92	7.96	5.66	8.52	6.36	9.11	6.96	9.39	7.97
15.0	6.68	4.31	7.55	4.92	7.96	5.66	8.52	6.36	9.11	6.96	9.39	7.97
20.0	6.68	4.31	7.55	4.92	7.96	5.66	8.52	6.36	9.11	6.96	9.39	7.97
25.0	6.68	4.31	7.55	4.92	7.96	5.66	8.52	6.36	9.11	6.96	9.39	7.97
30.0	6.68	4.31	7.55	4.92	7.96	5.66	8.52	6.36	9.11	6.96	9.39	7.97
35.0	6.68	4.31	7.55	4.92	7.96	5.66	8.52	6.36	9.11	6.96	9.39	7.97
40.0	4.94	2.36	5.59	2.69	5.89	3.10	6.30	3.48	6.74	3.81	6.95	4.36
46.0	3.21	0.99	3.62	1.13	3.82	1.30	4.09	1.47	4.37	1.60	4.51	1.84

NOTES:

- TC: Total Capacity (kW), SHC: Sensible Heat Capacity (kW)
- Values mentioned in the table are based on the following conditions:
  - Pipe length: 5 m, Height difference: 0 m (Outdoor unit—Indoor unit)

● Ceiling type

Model: ABEG18KRTA

Outdoor temperature	Indoor temperature (°CDB / °CWB)											
	18.0 / 12.0		21.0 / 15.0		23.0 / 16.0		27.0 / 19.0		29.0 / 21.0		32.0 / 23.0	
(°CDB)	TC	SHC	TC	SHC	TC	SHC	TC	SHC	TC	SHC	TC	SHC
-10.0	4.85	3.02	5.48	3.45	5.78	3.97	6.19	4.46	6.62	4.87	6.82	5.58
-5.0	4.85	3.02	5.48	3.45	5.78	3.97	6.19	4.46	6.62	4.87	6.82	5.58
0.0	4.85	3.02	5.48	3.45	5.78	3.97	6.19	4.46	6.62	4.87	6.82	5.58
5.0	4.85	3.02	5.48	3.45	5.78	3.97	6.19	4.46	6.62	4.87	6.82	5.58
10.0	4.85	3.02	5.48	3.45	5.78	3.97	6.19	4.46	6.62	4.87	6.82	5.58
15.0	4.85	3.02	5.48	3.45	5.78	3.97	6.19	4.46	6.62	4.87	6.82	5.58
20.0	4.85	3.02	5.48	3.45	5.78	3.97	6.19	4.46	6.62	4.87	6.82	5.58
25.0	4.85	3.02	5.48	3.45	5.78	3.97	6.19	4.46	6.62	4.87	6.82	5.58
30.0	4.85	3.02	5.48	3.45	5.78	3.97	6.19	4.46	6.62	4.87	6.82	5.58
35.0	4.85	3.02	5.48	3.45	5.78	3.97	6.19	4.46	6.62	4.87	6.82	5.58
40.0	3.59	1.66	4.06	1.89	4.28	2.17	4.58	2.44	4.90	2.67	5.05	3.06
46.0	2.33	0.70	2.63	0.79	2.78	0.91	2.97	1.03	3.18	1.12	3.27	1.29

Model: ABEG22KRTA

Outdoor temperature	Indoor temperature (°CDB / °CWB)											
	18.0 / 12.0		21.0 / 15.0		23.0 / 16.0		27.0 / 19.0		29.0 / 21.0		32.0 / 23.0	
(°CDB)	TC	SHC	TC	SHC	TC	SHC	TC	SHC	TC	SHC	TC	SHC
-10.0	6.12	3.80	6.91	4.33	7.29	4.99	7.80	5.60	8.34	6.13	8.60	7.02
-5.0	6.12	3.80	6.91	4.33	7.29	4.99	7.80	5.60	8.34	6.13	8.60	7.02
0.0	6.12	3.80	6.91	4.33	7.29	4.99	7.80	5.60	8.34	6.13	8.60	7.02
5.0	6.12	3.80	6.91	4.33	7.29	4.99	7.80	5.60	8.34	6.13	8.60	7.02
10.0	6.12	3.80	6.91	4.33	7.29	4.99	7.80	5.60	8.34	6.13	8.60	7.02
15.0	6.12	3.80	6.91	4.33	7.29	4.99	7.80	5.60	8.34	6.13	8.60	7.02
20.0	6.12	3.80	6.91	4.33	7.29	4.99	7.80	5.60	8.34	6.13	8.60	7.02
25.0	6.12	3.80	6.91	4.33	7.29	4.99	7.80	5.60	8.34	6.13	8.60	7.02
30.0	6.12	3.80	6.91	4.33	7.29	4.99	7.80	5.60	8.34	6.13	8.60	7.02
35.0	6.12	3.80	6.91	4.33	7.29	4.99	7.80	5.60	8.34	6.13	8.60	7.02
40.0	4.53	2.08	5.11	2.37	5.39	2.73	5.77	3.07	6.17	3.36	6.36	3.84
46.0	2.94	0.88	3.32	1.00	3.50	1.15	3.74	1.29	4.00	1.41	4.13	1.62

NOTES:

- TC: Total Capacity (kW), SHC: Sensible Heat Capacity (kW)
- Values mentioned in the table are based on the following conditions:
  - Pipe length: 5 m, Height difference: 0 m (Outdoor unit—Indoor unit)

OUTDOOR UNIT AOEG36KBTA5

● Floor type

Model: AGEG09KVCA

Outdoor temperature	Indoor temperature (°CDB / °CWB)											
	18.0 / 12.0		21.0 / 15.0		23.0 / 16.0		27.0 / 19.0		29.0 / 21.0		32.0 / 23.0	
(°CDB)	TC	SHC	TC	SHC	TC	SHC	TC	SHC	TC	SHC	TC	SHC
-10.0	2.51	1.71	2.84	1.95	2.99	2.25	3.20	2.53	3.42	2.76	3.53	3.17
-5.0	2.51	1.71	2.84	1.95	2.99	2.25	3.20	2.53	3.42	2.76	3.53	3.17
0.0	2.51	1.71	2.84	1.95	2.99	2.25	3.20	2.53	3.42	2.76	3.53	3.17
5.0	2.51	1.71	2.84	1.95	2.99	2.25	3.20	2.53	3.42	2.76	3.53	3.17
10.0	2.51	1.71	2.84	1.95	2.99	2.25	3.20	2.53	3.42	2.76	3.53	3.17
15.0	2.51	1.71	2.84	1.95	2.99	2.25	3.20	2.53	3.42	2.76	3.53	3.17
20.0	2.51	1.71	2.84	1.95	2.99	2.25	3.20	2.53	3.42	2.76	3.53	3.17
25.0	2.51	1.71	2.84	1.95	2.99	2.25	3.20	2.53	3.42	2.76	3.53	3.17
30.0	2.51	1.71	2.84	1.95	2.99	2.25	3.20	2.53	3.42	2.76	3.53	3.17
35.0	2.51	1.71	2.84	1.95	2.99	2.25	3.20	2.53	3.42	2.76	3.53	3.17
40.0	1.86	0.94	2.10	1.07	2.21	1.23	2.37	1.38	2.53	1.51	2.61	1.73
46.0	1.20	0.39	1.36	0.45	1.43	0.52	1.54	0.58	1.64	0.64	1.69	0.73

Model: AGEG12KVCA

Outdoor temperature	Indoor temperature (°CDB / °CWB)											
	18.0 / 12.0		21.0 / 15.0		23.0 / 16.0		27.0 / 19.0		29.0 / 21.0		32.0 / 23.0	
(°CDB)	TC	SHC	TC	SHC	TC	SHC	TC	SHC	TC	SHC	TC	SHC
-10.0	3.37	2.16	3.81	2.46	4.02	2.83	4.30	3.18	4.60	3.48	4.74	3.99
-5.0	3.37	2.16	3.81	2.46	4.02	2.83	4.30	3.18	4.60	3.48	4.74	3.99
0.0	3.37	2.16	3.81	2.46	4.02	2.83	4.30	3.18	4.60	3.48	4.74	3.99
5.0	3.37	2.16	3.81	2.46	4.02	2.83	4.30	3.18	4.60	3.48	4.74	3.99
10.0	3.37	2.16	3.81	2.46	4.02	2.83	4.30	3.18	4.60	3.48	4.74	3.99
15.0	3.37	2.16	3.81	2.46	4.02	2.83	4.30	3.18	4.60	3.48	4.74	3.99
20.0	3.37	2.16	3.81	2.46	4.02	2.83	4.30	3.18	4.60	3.48	4.74	3.99
25.0	3.37	2.16	3.81	2.46	4.02	2.83	4.30	3.18	4.60	3.48	4.74	3.99
30.0	3.37	2.16	3.81	2.46	4.02	2.83	4.30	3.18	4.60	3.48	4.74	3.99
35.0	3.37	2.16	3.81	2.46	4.02	2.83	4.30	3.18	4.60	3.48	4.74	3.99
40.0	2.49	1.18	2.82	1.35	2.97	1.55	3.18	1.74	3.40	1.91	3.51	2.18
46.0	1.62	0.50	1.83	0.57	1.93	0.65	2.06	0.73	2.21	0.80	2.27	0.92

Model: AGEG14KVCA

Outdoor temperature	Indoor temperature (°CDB / °CWB)											
	18.0 / 12.0		21.0 / 15.0		23.0 / 16.0		27.0 / 19.0		29.0 / 21.0		32.0 / 23.0	
(°CDB)	TC	SHC	TC	SHC	TC	SHC	TC	SHC	TC	SHC	TC	SHC
-10.0	3.92	2.44	4.43	2.78	4.67	3.20	5.00	3.60	5.35	3.94	5.51	4.51
-5.0	3.92	2.44	4.43	2.78	4.67	3.20	5.00	3.60	5.35	3.94	5.51	4.51
0.0	3.92	2.44	4.43	2.78	4.67	3.20	5.00	3.60	5.35	3.94	5.51	4.51
5.0	3.92	2.44	4.43	2.78	4.67	3.20	5.00	3.60	5.35	3.94	5.51	4.51
10.0	3.92	2.44	4.43	2.78	4.67	3.20	5.00	3.60	5.35	3.94	5.51	4.51
15.0	3.92	2.44	4.43	2.78	4.67	3.20	5.00	3.60	5.35	3.94	5.51	4.51
20.0	3.92	2.44	4.43	2.78	4.67	3.20	5.00	3.60	5.35	3.94	5.51	4.51
25.0	3.92	2.44	4.43	2.78	4.67	3.20	5.00	3.60	5.35	3.94	5.51	4.51
30.0	3.92	2.44	4.43	2.78	4.67	3.20	5.00	3.60	5.35	3.94	5.51	4.51
35.0	3.92	2.44	4.43	2.78	4.67	3.20	5.00	3.60	5.35	3.94	5.51	4.51
40.0	2.90	1.34	3.28	1.52	3.46	1.75	3.70	1.97	3.96	2.16	4.08	2.47
46.0	1.88	0.56	2.13	0.64	2.24	0.74	2.40	0.83	2.57	0.91	2.64	1.04

NOTES:

- TC: Total Capacity (kW), SHC: Sensible Heat Capacity (kW)
- Values mentioned in the table are based on the following conditions:
  - Pipe length: 5 m, Height difference: 0 m (Outdoor unit—Indoor unit)

OUTDOOR UNIT AOEG36KBTA5

6-3. Heating capacity

NOTE: Values mentioned in the table are calculated based on the maximum capacity.

■ Model: AOEG36KBTA5

Indoor unit connecting capacity	Outdoor temperature		Indoor temperature									
			16.0 °CDB		18.0 °CDB		20.0 °CDB		22.0 °CDB		24.0 °CDB	
kBtu/h	°CDB	°CWB	TC	IP	TC	IP	TC	IP	TC	IP	TC	IP
54	-15.0	-16.0	7.8	2.88	7.6	2.94	7.4	3.00	7.2	3.06	7.0	3.12
	-10.0	-11.0	9.1	3.25	8.9	3.32	8.7	3.39	8.5	3.46	8.2	3.53
	-5.0	-7.0	9.5	2.93	9.3	2.99	9.1	3.05	8.8	3.11	8.6	3.17
	0.0	-2.0	10.9	3.13	10.7	3.19	10.4	3.26	10.2	3.32	9.9	3.39
	5.0	3.0	12.6	3.29	12.3	3.36	12.0	3.42	11.7	3.49	11.4	3.56
	7.0	6.0	12.6	3.13	12.3	3.20	12.0	3.26	11.7	3.33	11.4	3.39
	10.0	8.0	12.6	2.90	12.3	2.96	12.0	3.02	11.7	3.08	11.4	3.14
	15.0	10.0	12.6	2.72	12.3	2.78	12.0	2.84	11.7	2.89	11.4	2.95
	20.0	15.0	12.6	2.36	12.3	2.41	12.0	2.46	11.7	2.51	11.4	2.56
	24.0	18.0	12.6	2.00	12.3	2.04	12.0	2.08	11.7	2.12	11.4	2.16
53	-15.0	-16.0	7.8	2.88	7.6	2.94	7.4	3.00	7.2	3.06	7.0	3.12
	-10.0	-11.0	9.1	3.25	8.9	3.32	8.7	3.39	8.5	3.46	8.2	3.53
	-5.0	-7.0	9.5	2.93	9.3	2.99	9.1	3.05	8.8	3.11	8.6	3.17
	0.0	-2.0	10.9	3.13	10.7	3.19	10.4	3.26	10.2	3.32	9.9	3.39
	5.0	3.0	12.6	3.29	12.3	3.36	12.0	3.42	11.7	3.49	11.4	3.56
	7.0	6.0	12.6	3.13	12.3	3.20	12.0	3.26	11.7	3.33	11.4	3.39
	10.0	8.0	12.6	2.90	12.3	2.96	12.0	3.02	11.7	3.08	11.4	3.14
	15.0	10.0	12.6	2.72	12.3	2.78	12.0	2.84	11.7	2.89	11.4	2.95
	20.0	15.0	12.6	2.36	12.3	2.41	12.0	2.46	11.7	2.51	11.4	2.56
	24.0	18.0	12.6	2.00	12.3	2.04	12.0	2.08	11.7	2.12	11.4	2.16
52	-15.0	-16.0	7.8	2.88	7.6	2.94	7.4	3.00	7.2	3.06	7.0	3.12
	-10.0	-11.0	9.1	3.25	8.9	3.32	8.7	3.39	8.5	3.46	8.2	3.53
	-5.0	-7.0	9.5	2.93	9.3	2.99	9.1	3.05	8.8	3.11	8.6	3.17
	0.0	-2.0	10.9	3.13	10.7	3.19	10.4	3.26	10.2	3.32	9.9	3.39
	5.0	3.0	12.6	3.29	12.3	3.36	12.0	3.42	11.7	3.49	11.4	3.56
	7.0	6.0	12.6	3.13	12.3	3.20	12.0	3.26	11.7	3.33	11.4	3.39
	10.0	8.0	12.6	2.90	12.3	2.96	12.0	3.02	11.7	3.08	11.4	3.14
	15.0	10.0	12.6	2.72	12.3	2.78	12.0	2.84	11.7	2.89	11.4	2.95
	20.0	15.0	12.6	2.36	12.3	2.41	12.0	2.46	11.7	2.51	11.4	2.56
	24.0	18.0	12.6	2.00	12.3	2.04	12.0	2.08	11.7	2.12	11.4	2.16
51	-15.0	-16.0	7.8	2.88	7.6	2.94	7.4	3.00	7.2	3.06	7.0	3.12
	-10.0	-11.0	9.1	3.25	8.9	3.32	8.7	3.39	8.5	3.46	8.2	3.53
	-5.0	-7.0	9.5	2.93	9.3	2.99	9.1	3.05	8.8	3.11	8.6	3.17
	0.0	-2.0	10.9	3.13	10.7	3.19	10.4	3.26	10.2	3.32	9.9	3.39
	5.0	3.0	12.6	3.29	12.3	3.36	12.0	3.42	11.7	3.49	11.4	3.56
	7.0	6.0	12.6	3.13	12.3	3.20	12.0	3.26	11.7	3.33	11.4	3.39
	10.0	8.0	12.6	2.90	12.3	2.96	12.0	3.02	11.7	3.08	11.4	3.14
	15.0	10.0	12.6	2.72	12.3	2.78	12.0	2.84	11.7	2.89	11.4	2.95
	20.0	15.0	12.6	2.36	12.3	2.41	12.0	2.46	11.7	2.51	11.4	2.56
	24.0	18.0	12.6	2.00	12.3	2.04	12.0	2.08	11.7	2.12	11.4	2.16
50	-15.0	-16.0	7.8	2.88	7.6	2.94	7.4	3.00	7.2	3.06	7.0	3.12
	-10.0	-11.0	9.1	3.25	8.9	3.32	8.7	3.39	8.5	3.46	8.2	3.53
	-5.0	-7.0	9.5	2.93	9.3	2.99	9.1	3.05	8.8	3.11	8.6	3.17
	0.0	-2.0	10.9	3.13	10.7	3.19	10.4	3.26	10.2	3.32	9.9	3.39
	5.0	3.0	12.6	3.29	12.3	3.36	12.0	3.42	11.7	3.49	11.4	3.56
	7.0	6.0	12.6	3.13	12.3	3.20	12.0	3.26	11.7	3.33	11.4	3.39
	10.0	8.0	12.6	2.90	12.3	2.96	12.0	3.02	11.7	3.08	11.4	3.14
	15.0	10.0	12.6	2.72	12.3	2.78	12.0	2.84	11.7	2.89	11.4	2.95
	20.0	15.0	12.6	2.36	12.3	2.41	12.0	2.46	11.7	2.51	11.4	2.56
	24.0	18.0	12.6	2.00	12.3	2.04	12.0	2.08	11.7	2.12	11.4	2.16
49	-15.0	-16.0	7.8	2.88	7.6	2.94	7.4	3.00	7.2	3.06	7.0	3.12
	-10.0	-11.0	9.1	3.25	8.9	3.32	8.7	3.39	8.5	3.46	8.2	3.53
	-5.0	-7.0	9.5	2.93	9.3	2.99	9.1	3.05	8.8	3.11	8.6	3.17
	0.0	-2.0	10.9	3.13	10.7	3.19	10.4	3.26	10.2	3.32	9.9	3.39
	5.0	3.0	12.6	3.29	12.3	3.36	12.0	3.42	11.7	3.49	11.4	3.56
	7.0	6.0	12.6	3.13	12.3	3.20	12.0	3.26	11.7	3.33	11.4	3.39
	10.0	8.0	12.6	2.90	12.3	2.96	12.0	3.02	11.7	3.08	11.4	3.14
	15.0	10.0	12.6	2.72	12.3	2.78	12.0	2.84	11.7	2.89	11.4	2.95
	20.0	15.0	12.6	2.36	12.3	2.41	12.0	2.46	11.7	2.51	11.4	2.56
	24.0	18.0	12.6	2.00	12.3	2.04	12.0	2.08	11.7	2.12	11.4	2.16
48	-15.0	-16.0	7.8	2.88	7.6	2.94	7.4	3.00	7.2	3.06	7.0	3.12
	-10.0	-11.0	9.1	3.25	8.9	3.32	8.7	3.39	8.5	3.46	8.2	3.53
	-5.0	-7.0	9.5	2.93	9.3	2.99	9.1	3.05	8.8	3.11	8.6	3.17
	0.0	-2.0	10.9	3.13	10.7	3.19	10.4	3.26	10.2	3.32	9.9	3.39
	5.0	3.0	12.6	3.29	12.3	3.36	12.0	3.42	11.7	3.49	11.4	3.56
	7.0	6.0	12.6	3.13	12.3	3.20	12.0	3.26	11.7	3.33	11.4	3.39
	10.0	8.0	12.6	2.90	12.3	2.96	12.0	3.02	11.7	3.08	11.4	3.14
	15.0	10.0	12.6	2.72	12.3	2.78	12.0	2.84	11.7	2.89	11.4	2.95
	20.0	15.0	12.6	2.36	12.3	2.41	12.0	2.46	11.7	2.51	11.4	2.56
	24.0	18.0	12.6	2.00	12.3	2.04	12.0	2.08	11.7	2.12	11.4	2.16
47	-15.0	-16.0	7.8	2.88	7.6	2.94	7.4	3.00	7.2	3.06	7.0	3.12
	-10.0	-11.0	9.1	3.25	8.9	3.32	8.7	3.39	8.5	3.46	8.2	3.53
	-5.0	-7.0	9.5	2.93	9.3	2.99	9.1	3.05	8.8	3.11	8.6	3.17
	0.0	-2.0	10.9	3.13	10.7	3.19	10.4	3.26	10.2	3.32	9.9	3.39
	5.0	3.0	12.6	3.29	12.3	3.36	12.0	3.42	11.7	3.49	11.4	3.56
	7.0	6.0	12.6	3.13	12.3	3.20	12.0	3.26	11.7	3.33	11.4	3.39
	10.0	8.0	12.6	2.90	12.3	2.96	12.0	3.02	11.7	3.08	11.4	3.14
	15.0	10.0	12.6	2.72	12.3	2.78	12.0	2.84	11.7	2.89	11.4	2.95
	20.0	15.0	12.6	2.36	12.3	2.41	12.0	2.46	11.7	2.51	11.4	2.56
	24.0	18.0	12.6	2.00	12.3	2.04	12.0	2.08	11.7	2.12	11.4	2.16

OUTDOOR UNIT AOEG36KBTA5

Indoor unit connecting capacity	Outdoor temperature		Indoor temperature									
			16.0 °CDB		18.0 °CDB		20.0 °CDB		22.0 °CDB		24.0 °CDB	
kBtu/h	°CDB	°CWB	TC	IP	TC	IP	TC	IP	TC	IP	TC	IP
46	-15.0	-16.0	7.8	2.88	7.6	2.94	7.4	3.00	7.2	3.06	7.0	3.12
	-10.0	-11.0	9.1	3.25	8.9	3.32	8.7	3.39	8.5	3.46	8.2	3.53
	-5.0	-7.0	9.5	2.93	9.3	2.99	9.1	3.05	8.8	3.11	8.6	3.17
	0.0	-2.0	10.9	3.13	10.7	3.19	10.4	3.26	10.2	3.32	9.9	3.39
	5.0	3.0	12.6	3.29	12.3	3.36	12.0	3.42	11.7	3.49	11.4	3.56
	7.0	6.0	12.6	3.13	12.3	3.20	12.0	3.26	11.7	3.33	11.4	3.39
	10.0	8.0	12.6	2.90	12.3	2.96	12.0	3.02	11.7	3.08	11.4	3.14
	15.0	10.0	12.6	2.72	12.3	2.78	12.0	2.84	11.7	2.89	11.4	2.95
	20.0	15.0	12.6	2.36	12.3	2.41	12.0	2.46	11.7	2.51	11.4	2.56
	24.0	18.0	12.6	2.00	12.3	2.04	12.0	2.08	11.7	2.12	11.4	2.16
45	-15.0	-16.0	7.8	2.88	7.6	2.94	7.4	3.00	7.2	3.06	7.0	3.12
	-10.0	-11.0	9.1	3.25	8.9	3.32	8.7	3.39	8.5	3.46	8.2	3.53
	-5.0	-7.0	9.5	2.93	9.3	2.99	9.1	3.05	8.8	3.11	8.6	3.17
	0.0	-2.0	10.9	3.13	10.7	3.19	10.4	3.26	10.2	3.32	9.9	3.39
	5.0	3.0	12.6	3.29	12.3	3.36	12.0	3.42	11.7	3.49	11.4	3.56
	7.0	6.0	12.6	3.13	12.3	3.20	12.0	3.26	11.7	3.33	11.4	3.39
	10.0	8.0	12.6	2.90	12.3	2.96	12.0	3.02	11.7	3.08	11.4	3.14
	15.0	10.0	12.6	2.72	12.3	2.78	12.0	2.84	11.7	2.89	11.4	2.95
	20.0	15.0	12.6	2.36	12.3	2.41	12.0	2.46	11.7	2.51	11.4	2.56
	24.0	18.0	12.6	2.00	12.3	2.04	12.0	2.08	11.7	2.12	11.4	2.16
44	-15.0	-16.0	7.8	2.88	7.6	2.94	7.4	3.00	7.2	3.06	7.0	3.12
	-10.0	-11.0	9.1	3.25	8.9	3.32	8.7	3.39	8.5	3.46	8.2	3.53
	-5.0	-7.0	9.5	2.93	9.3	2.99	9.1	3.05	8.8	3.11	8.6	3.17
	0.0	-2.0	10.9	3.13	10.7	3.19	10.4	3.26	10.2	3.32	9.9	3.39
	5.0	3.0	12.6	3.29	12.3	3.36	12.0	3.42	11.7	3.49	11.4	3.56
	7.0	6.0	12.6	3.13	12.3	3.20	12.0	3.26	11.7	3.33	11.4	3.39
	10.0	8.0	12.6	2.90	12.3	2.96	12.0	3.02	11.7	3.08	11.4	3.14
	15.0	10.0	12.6	2.72	12.3	2.78	12.0	2.84	11.7	2.89	11.4	2.95
	20.0	15.0	12.6	2.36	12.3	2.41	12.0	2.46	11.7	2.51	11.4	2.56
	24.0	18.0	12.6	2.00	12.3	2.04	12.0	2.08	11.7	2.12	11.4	2.16
43	-15.0	-16.0	7.8	2.88	7.6	2.94	7.4	3.00	7.2	3.06	7.0	3.12
	-10.0	-11.0	9.1	3.25	8.9	3.32	8.7	3.39	8.5	3.46	8.2	3.53
	-5.0	-7.0	9.5	2.93	9.3	2.99	9.1	3.05	8.8	3.11	8.6	3.17
	0.0	-2.0	10.9	3.13	10.7	3.19	10.4	3.26	10.2	3.32	9.9	3.39
	5.0	3.0	12.6	3.29	12.3	3.36	12.0	3.42	11.7	3.49	11.4	3.56
	7.0	6.0	12.6	3.13	12.3	3.20	12.0	3.26	11.7	3.33	11.4	3.39
	10.0	8.0	12.6	2.90	12.3	2.96	12.0	3.02	11.7	3.08	11.4	3.14
	15.0	10.0	12.6	2.72	12.3	2.78	12.0	2.84	11.7	2.89	11.4	2.95
	20.0	15.0	12.6	2.36	12.3	2.41	12.0	2.46	11.7	2.51	11.4	2.56
	24.0	18.0	12.6	2.00	12.3	2.04	12.0	2.08	11.7	2.12	11.4	2.16
42	-15.0	-16.0	7.8	2.88	7.6	2.94	7.4	3.00	7.2	3.06	7.0	3.12
	-10.0	-11.0	9.1	3.25	8.9	3.32	8.7	3.39	8.5	3.46	8.2	3.53
	-5.0	-7.0	9.5	2.93	9.3	2.99	9.1	3.05	8.8	3.11	8.6	3.17
	0.0	-2.0	10.9	3.13	10.7	3.19	10.4	3.26	10.2	3.32	9.9	3.39
	5.0	3.0	12.6	3.29	12.3	3.36	12.0	3.42	11.7	3.49	11.4	3.56
	7.0	6.0	12.6	3.13	12.3	3.20	12.0	3.26	11.7	3.33	11.4	3.39
	10.0	8.0	12.6	2.90	12.3	2.96	12.0	3.02	11.7	3.08	11.4	3.14
	15.0	10.0	12.6	2.72	12.3	2.78	12.0	2.84	11.7	2.89	11.4	2.95
	20.0	15.0	12.6	2.36	12.3	2.41	12.0	2.46	11.7	2.51	11.4	2.56
	24.0	18.0	12.6	2.00	12.3	2.04	12.0	2.08	11.7	2.12	11.4	2.16
41	-15.0	-16.0	7.8	2.88	7.6	2.94	7.4	3.00	7.2	3.06	7.0	3.12
	-10.0	-11.0	9.1	3.25	8.9	3.32	8.7	3.39	8.5	3.46	8.2	3.53
	-5.0	-7.0	9.5	2.93	9.3	2.99	9.1	3.05	8.8	3.11	8.6	3.17
	0.0	-2.0	10.9	3.13	10.7	3.19	10.4	3.26	10.2	3.32	9.9	3.39
	5.0	3.0	12.6	3.29	12.3	3.36	12.0	3.42	11.7	3.49	11.4	3.56
	7.0	6.0	12.6	3.13	12.3	3.20	12.0	3.26	11.7	3.33	11.4	3.39
	10.0	8.0	12.6	2.90	12.3	2.96	12.0	3.02	11.7	3.08	11.4	3.14
	15.0	10.0	12.6	2.72	12.3	2.78	12.0	2.84	11.7	2.89	11.4	2.95
	20.0	15.0	12.6	2.36	12.3	2.41	12.0	2.46	11.7	2.51	11.4	2.56
	24.0	18.0	12.6	2.00	12.3	2.04	12.0	2.08	11.7	2.12	11.4	2.16
40	-15.0	-16.0	7.8	2.88	7.6	2.94	7.4	3.00	7.2	3.06	7.0	3.12
	-10.0	-11.0	9.1	3.25	8.9	3.32	8.7	3.39	8.5	3.46	8.2	3.53
	-5.0	-7.0	9.5	2.93	9.3	2.99	9.1	3.05	8.8	3.11	8.6	3.17
	0.0	-2.0	10.9	3.13	10.7	3.19	10.4	3.26	10.2	3.32	9.9	3.39
	5.0	3.0	12.6	3.29	12.3	3.36	12.0	3.42	11.7	3.49	11.4	3.56
	7.0	6.0	12.6	3.13	12.3	3.20	12.0	3.26	11.7	3.33	11.4	3.39
	10.0	8.0	12.6	2.90	12.3	2.96	12.0	3.02	11.7	3.08	11.4	3.14
	15.0	10.0	12.6	2.72	12.3	2.78	12.0	2.84	11.7	2.89	11.4	2.95
	20.0	15.0	12.6	2.36	12.3	2.41	12.0	2.46	11.7	2.51	11.4	2.56
	24.0	18.0	12.6	2.00	12.3	2.04	12.0	2.08	11.7	2.12	11.4	2.16
39	-15.0	-16.0	7.8	2.88	7.6	2.94	7.4	3.00	7.2	3.06	7.0	3.12
	-10.0	-11.0	9.1	3.25	8.9	3.32	8.7	3.39	8.5	3.46	8.2	3.53
	-5.0	-7.0	9.5	2.93	9.3	2.99	9.1	3.05	8.8	3.11	8.6	3.17
	0.0	-2.0	10.9	3.13	10.7	3.19	10.4	3.26	10.2	3.32	9.9	3.39
	5.0	3.0	12.6	3.29	12.3	3.36	12.0	3.42	11.7	3.49	11.4	3.56
	7.0	6.0	12.6	3.13	12.3	3.20	12.0	3.26	11.7	3.33	11.4	3.39
	10.0	8.0	12.6	2.90	12.3	2.96	12.0	3.02	11.7	3.08	11.4	3.14
	15.0	10.0	12.6	2.72	12.3	2.78	12.0	2.84	11.7	2.89	11.4	2.95
	20.0	15.0	12.6	2.36	12.3	2.41	12.0	2.46	11.7	2.51	11.4	2.56
	24.0	18.0	12.6	2.00	12.3	2.04	12.0	2.08	11.7	2.12	11.4	2.16
38	-15.0	-16.0	7.8	2.88	7.6	2.94	7.4	3.00	7.2	3.06	7.0	3.12
	-10.0	-11.0	9.1	3.25	8.9	3.32	8.7	3.39	8.5	3.46	8.2	3.53
	-5.0	-7.0	9.5	2.93	9.3	2.99	9.1	3.05	8.8	3.11	8.6	3.17
	0.0	-2.0	10.9	3.13	10.7	3.19	10.4	3.26	10.2	3.32	9.9	3.39
	5.0	3.0	12.6	3.29	12.3	3.36	12.0	3.42	11.7	3.49	11.4	3.56
	7.0	6.0	12.6	3.13	12.3	3.20	12.0	3.26	11.7	3.33	11.4	3.39
	10.0	8.0	12.6	2.90	12.3	2.96	12.0	3.02	11.7	3.08	11.4	3.14
	15.0	10.0	12.6	2.72	12.3	2.78	12.0	2.84	11.7	2.89	11.4	2.95
	20.0	15.0	12.6	2.36	12.3	2.41	12.0	2.46	11.7	2.51	11.4	2.56
	24.0	18.0	12.6	2.00	12.3	2.04	12.0	2.08	11.7	2.12	11.4	2.16

OUTDOOR UNIT
AOEG36KBTA5

Indoor unit connecting capacity	Outdoor temperature		Indoor temperature									
			16.0 °CDB		18.0 °CDB		20.0 °CDB		22.0 °CDB		24.0 °CDB	
kBtu/h	°CDB	°CWB	TC	IP	TC	IP	TC	IP	TC	IP	TC	IP
37	-15.0	-16.0	7.8	2.88	7.6	2.94	7.4	3.00	7.2	3.06	7.0	3.12
	-10.0	-11.0	9.1	3.25	8.9	3.32	8.7	3.39	8.5	3.46	8.2	3.53
	-5.0	-7.0	9.5	2.93	9.3	2.99	9.1	3.05	8.8	3.11	8.6	3.17
	0.0	-2.0	10.9	3.13	10.7	3.19	10.4	3.26	10.2	3.32	9.9	3.39
	5.0	3.0	12.6	3.29	12.3	3.36	12.0	3.42	11.7	3.49	11.4	3.56
	7.0	6.0	12.6	3.13	12.3	3.20	12.0	3.26	11.7	3.33	11.4	3.39
	10.0	8.0	12.6	2.90	12.3	2.96	12.0	3.02	11.7	3.08	11.4	3.14
	15.0	10.0	12.6	2.72	12.3	2.78	12.0	2.84	11.7	2.89	11.4	2.95
	20.0	15.0	12.6	2.36	12.3	2.41	12.0	2.46	11.7	2.51	11.4	2.56
	24.0	18.0	12.6	2.00	12.3	2.04	12.0	2.08	11.7	2.12	11.4	2.16
36	-15.0	-16.0	7.8	2.88	7.6	2.94	7.4	3.00	7.2	3.06	7.0	3.12
	-10.0	-11.0	9.1	3.25	8.9	3.32	8.7	3.39	8.5	3.46	8.2	3.53
	-5.0	-7.0	9.5	2.93	9.3	2.99	9.1	3.05	8.8	3.11	8.6	3.17
	0.0	-2.0	10.9	3.13	10.7	3.19	10.4	3.26	10.2	3.32	9.9	3.39
	5.0	3.0	12.6	3.29	12.3	3.36	12.0	3.42	11.7	3.49	11.4	3.56
	7.0	6.0	12.6	3.13	12.3	3.20	12.0	3.26	11.7	3.33	11.4	3.39
	10.0	8.0	12.6	2.90	12.3	2.96	12.0	3.02	11.7	3.08	11.4	3.14
	15.0	10.0	12.6	2.72	12.3	2.78	12.0	2.84	11.7	2.89	11.4	2.95
	20.0	15.0	12.6	2.36	12.3	2.41	12.0	2.46	11.7	2.51	11.4	2.56
	24.0	18.0	12.6	2.00	12.3	2.04	12.0	2.08	11.7	2.12	11.4	2.16
35	-15.0	-16.0	7.8	2.88	7.6	2.94	7.4	3.00	7.2	3.06	7.0	3.12
	-10.0	-11.0	9.1	3.25	8.9	3.32	8.7	3.39	8.5	3.46	8.2	3.53
	-5.0	-7.0	9.5	2.93	9.3	2.99	9.1	3.05	8.8	3.11	8.6	3.17
	0.0	-2.0	10.9	3.13	10.7	3.19	10.4	3.26	10.2	3.32	9.9	3.39
	5.0	3.0	12.6	3.29	12.3	3.36	12.0	3.42	11.7	3.49	11.4	3.56
	7.0	6.0	12.6	3.13	12.3	3.20	12.0	3.26	11.7	3.33	11.4	3.39
	10.0	8.0	12.6	2.90	12.3	2.96	12.0	3.02	11.7	3.08	11.4	3.14
	15.0	10.0	12.6	2.72	12.3	2.78	12.0	2.84	11.7	2.89	11.4	2.95
	20.0	15.0	12.6	2.36	12.3	2.41	12.0	2.46	11.7	2.51	11.4	2.56
	24.0	18.0	12.6	2.00	12.3	2.04	12.0	2.08	11.7	2.12	11.4	2.16
34	-15.0	-16.0	7.8	2.88	7.6	2.94	7.4	3.00	7.2	3.06	7.0	3.12
	-10.0	-11.0	9.1	3.25	8.9	3.32	8.7	3.39	8.5	3.45	8.2	3.52
	-5.0	-7.0	9.5	2.93	9.3	2.99	9.1	3.05	8.8	3.11	8.6	3.17
	0.0	-2.0	10.9	3.12	10.7	3.19	10.4	3.25	10.2	3.32	9.9	3.38
	5.0	3.0	12.6	3.28	12.3	3.35	12.0	3.42	11.7	3.49	11.4	3.56
	7.0	6.0	12.6	3.13	12.3	3.19	12.0	3.26	11.7	3.33	11.4	3.39
	10.0	8.0	12.6	2.90	12.3	2.96	12.0	3.02	11.7	3.08	11.4	3.14
	15.0	10.0	12.6	2.72	12.3	2.78	12.0	2.83	11.7	2.89	11.4	2.95
	20.0	15.0	12.6	2.36	12.3	2.41	12.0	2.46	11.7	2.51	11.4	2.56
	24.0	18.0	12.6	1.99	12.3	2.04	12.0	2.08	11.7	2.12	11.4	2.16
33	-15.0	-16.0	7.8	2.88	7.6	2.94	7.4	3.00	7.2	3.06	7.0	3.12
	-10.0	-11.0	9.1	3.25	8.9	3.32	8.7	3.39	8.5	3.45	8.2	3.52
	-5.0	-7.0	9.5	2.93	9.3	2.99	9.1	3.05	8.8	3.11	8.6	3.17
	0.0	-2.0	10.9	3.12	10.7	3.19	10.4	3.25	10.2	3.32	9.9	3.38
	5.0	3.0	12.6	3.28	12.3	3.35	12.0	3.42	11.7	3.49	11.4	3.56
	7.0	6.0	12.6	3.13	12.3	3.19	12.0	3.26	11.7	3.33	11.4	3.39
	10.0	8.0	12.6	2.90	12.3	2.96	12.0	3.02	11.7	3.08	11.4	3.14
	15.0	10.0	12.6	2.72	12.3	2.78	12.0	2.83	11.7	2.89	11.4	2.95
	20.0	15.0	12.6	2.36	12.3	2.41	12.0	2.46	11.7	2.51	11.4	2.56
	24.0	18.0	12.6	1.99	12.3	2.04	12.0	2.08	11.7	2.12	11.4	2.16
32	-15.0	-16.0	7.8	2.88	7.6	2.94	7.4	3.00	7.2	3.06	7.0	3.12
	-10.0	-11.0	9.1	3.25	8.9	3.32	8.7	3.39	8.5	3.45	8.2	3.52
	-5.0	-7.0	9.5	2.93	9.3	2.99	9.1	3.05	8.8	3.11	8.6	3.17
	0.0	-2.0	10.9	3.12	10.7	3.19	10.4	3.25	10.2	3.32	9.9	3.38
	5.0	3.0	12.6	3.28	12.3	3.35	12.0	3.42	11.7	3.49	11.4	3.56
	7.0	6.0	12.6	3.13	12.3	3.19	12.0	3.26	11.7	3.33	11.4	3.39
	10.0	8.0	12.6	2.90	12.3	2.96	12.0	3.02	11.7	3.08	11.4	3.14
	15.0	10.0	12.6	2.72	12.3	2.78	12.0	2.83	11.7	2.89	11.4	2.95
	20.0	15.0	12.6	2.36	12.3	2.41	12.0	2.46	11.7	2.51	11.4	2.56
	24.0	18.0	12.6	1.99	12.3	2.04	12.0	2.08	11.7	2.12	11.4	2.16
31	-15.0	-16.0	7.8	2.88	7.6	2.94	7.4	3.00	7.2	3.06	7.0	3.12
	-10.0	-11.0	9.1	3.25	8.9	3.32	8.7	3.39	8.5	3.45	8.2	3.52
	-5.0	-7.0	9.5	2.93	9.3	2.99	9.1	3.05	8.8	3.11	8.6	3.17
	0.0	-2.0	10.9	3.12	10.7	3.19	10.4	3.25	10.2	3.32	9.9	3.38
	5.0	3.0	12.6	3.28	12.3	3.35	12.0	3.42	11.7	3.49	11.4	3.56
	7.0	6.0	12.6	3.13	12.3	3.19	12.0	3.26	11.7	3.33	11.4	3.39
	10.0	8.0	12.6	2.90	12.3	2.96	12.0	3.02	11.7	3.08	11.4	3.14
	15.0	10.0	12.6	2.72	12.3	2.78	12.0	2.83	11.7	2.89	11.4	2.95
	20.0	15.0	12.6	2.36	12.3	2.41	12.0	2.46	11.7	2.51	11.4	2.56
	24.0	18.0	12.6	1.99	12.3	2.04	12.0	2.08	11.7	2.12	11.4	2.16
30	-15.0	-16.0	7.8	2.88	7.6	2.94	7.4	3.00	7.2	3.06	7.0	3.12
	-10.0	-11.0	9.1	3.25	8.9	3.32	8.7	3.39	8.5	3.45	8.2	3.52
	-5.0	-7.0	9.5	2.93	9.3	2.99	9.1	3.05	8.8	3.11	8.6	3.17
	0.0	-2.0	10.9	3.12	10.7	3.19	10.4	3.25	10.2	3.32	9.9	3.38
	5.0	3.0	12.6	3.28	12.3	3.35	12.0	3.42	11.7	3.49	11.4	3.56
	7.0	6.0	12.6	3.13	12.3	3.19	12.0	3.26	11.7	3.33	11.4	3.39
	10.0	8.0	12.6	2.90	12.3	2.96	12.0	3.02	11.7	3.08	11.4	3.14
	15.0	10.0	12.6	2.72	12.3	2.78	12.0	2.83	11.7	2.89	11.4	2.95
	20.0	15.0	12.6	2.36	12.3	2.41	12.0	2.46	11.7	2.51	11.4	2.56
	24.0	18.0	12.6	1.99	12.3	2.04	12.0	2.08	11.7	2.12	11.4	2.16
29	-15.0	-16.0	7.5	2.75	7.3	2.81	7.1	2.87	7.0	2.92	6.8	2.98
	-10.0	-11.0	8.8	3.11	8.6	3.18	8.4	3.24	8.2	3.31	8.0	3.37
	-5.0	-7.0	9.2	2.80	9.0	2.86	8.8	2.92	8.5	2.98	8.3	3.03
	0.0	-2.0	10.6	2.99	10.3	3.05	10.1	3.11	9.8	3.18	9.6	3.24
	5.0	3.0	12.2	3.14	11.9	3.21	11.6	3.27	11.3	3.34	11.0	3.41
	7.0	6.0	12.2	3.00	11.9	3.06	11.6	3.12	11.3	3.18	11.0	3.24
	10.0	8.0	12.2	2.78	11.9	2.83	11.6	2.89	11.3	2.95	11.0	3.01
	15.0	10.0	12.2	2.60	11.9	2.66	11.6	2.71	11.3	2.77	11.0	2.82
	20.0	15.0	12.2	2.26	11.9	2.31	11.6	2.35	11.3	2.40	11.0	2.45
	24.0	18.0	12.2	1.91	11.9	1.95	11.6	1.99	11.3	2.03	11.0	2.07

OUTDOOR UNIT
AOEG36KBTA5

Indoor unit connecting capacity	Outdoor temperature		Indoor temperature									
			16.0 °CDB		18.0 °CDB		20.0 °CDB		22.0 °CDB		24.0 °CDB	
kBtu/h	°CDB	°CWB	TC	IP	TC	IP	TC	IP	TC	IP	TC	IP
28	-15.0	-16.0	7.2	2.61	7.1	2.66	6.9	2.72	6.7	2.77	6.6	2.83
	-10.0	-11.0	8.5	2.95	8.3	3.01	8.1	3.07	7.9	3.13	7.7	3.20
	-5.0	-7.0	8.9	2.66	8.7	2.71	8.5	2.77	8.3	2.82	8.0	2.88
	0.0	-2.0	10.2	2.83	10.0	2.89	9.7	2.95	9.5	3.01	9.2	3.07
	5.0	3.0	11.8	2.98	11.5	3.04	11.2	3.10	10.9	3.17	10.6	3.23
	7.0	6.0	11.8	2.84	11.5	2.90	11.2	2.96	10.9	3.02	10.6	3.08
	10.0	8.0	11.8	2.63	11.5	2.69	11.2	2.74	10.9	2.80	10.6	2.85
	15.0	10.0	11.8	2.47	11.5	2.52	11.2	2.57	10.9	2.62	10.6	2.67
	20.0	15.0	11.8	2.14	11.5	2.19	11.2	2.23	10.9	2.28	10.6	2.32
	24.0	18.0	11.8	1.81	11.5	1.85	11.2	1.88	10.9	1.92	10.6	1.96
27	-15.0	-16.0	7.0	2.50	6.8	2.56	6.7	2.61	6.5	2.66	6.3	2.71
	-10.0	-11.0	8.2	2.83	8.0	2.89	7.8	2.95	7.6	3.01	7.4	3.07
	-5.0	-7.0	8.6	2.55	8.4	2.60	8.2	2.65	8.0	2.71	7.8	2.76
	0.0	-2.0	9.9	2.72	9.6	2.78	9.4	2.83	9.2	2.89	8.9	2.95
	5.0	3.0	11.3	2.86	11.1	2.92	10.8	2.98	10.5	3.04	10.3	3.10
	7.0	6.0	11.3	2.72	11.1	2.78	10.8	2.84	10.5	2.89	10.3	2.95
	10.0	8.0	11.3	2.52	11.1	2.58	10.8	2.63	10.5	2.68	10.3	2.73
	15.0	10.0	11.3	2.37	11.1	2.42	10.8	2.47	10.5	2.52	10.3	2.57
	20.0	15.0	11.3	2.05	11.1	2.10	10.8	2.14	10.5	2.18	10.3	2.22
	24.0	18.0	11.3	1.73	11.1	1.77	10.8	1.81	10.5	1.84	10.3	1.88

NOTES:

- TC: Total Capacity (kW), IP: Input Power (kW)
- Values mentioned in the table are based on the following conditions:
  - Power source of specifications: 230 V
  - Pipe length: 5 m, Height difference: 0 m (Outdoor unit—Indoor unit)
- 2 or more indoor units should be connected.
- The total ability of connected a indoor unit is from 27,000 Btu/h up to 54,000 Btu/h.
- Input in the table are calculated based on the maximum indoor unit input combinations.

OUTDOOR UNIT AOEG36KBTA5

● Compact cassette type

Model: AUXG07KVLA

Outdoor temperature		Indoor temperature (°CDB)				
		16.0	18.0	20.0	22.0	24.0
(°CDB)	(°CWB)	TC	TC	TC	TC	TC
-15.0	-16.0	1.82	1.78	1.74	1.69	1.65
-10.0	-11.0	2.12	2.07	2.02	1.97	1.92
-5.0	-7.0	2.23	2.18	2.13	2.07	2.02
0.0	-2.0	2.56	2.50	2.44	2.38	2.31
5.0	3.0	2.94	2.87	2.80	2.73	2.66
7.0	6.0	2.94	2.87	2.80	2.73	2.66
10.0	8.0	2.94	2.87	2.80	2.73	2.66
15.0	10.0	2.94	2.87	2.80	2.73	2.66
20.0	15.0	2.94	2.87	2.80	2.73	2.66
24.0	18.0	2.94	2.87	2.80	2.73	2.66

Model: AUXG09KVLA

Outdoor temperature		Indoor temperature (°CDB)				
		16.0	18.0	20.0	22.0	24.0
(°CDB)	(°CWB)	TC	TC	TC	TC	TC
-15.0	-16.0	2.34	2.29	2.23	2.18	2.12
-10.0	-11.0	2.72	2.66	2.59	2.53	2.46
-5.0	-7.0	2.87	2.80	2.74	2.67	2.60
0.0	-2.0	3.29	3.21	3.13	3.05	2.98
5.0	3.0	3.78	3.69	3.60	3.51	3.42
7.0	6.0	3.78	3.69	3.60	3.51	3.42
10.0	8.0	3.78	3.69	3.60	3.51	3.42
15.0	10.0	3.78	3.69	3.60	3.51	3.42
20.0	15.0	3.78	3.69	3.60	3.51	3.42
24.0	18.0	3.78	3.69	3.60	3.51	3.42

Model: AUXG12KVLA

Outdoor temperature		Indoor temperature (°CDB)				
		16.0	18.0	20.0	22.0	24.0
(°CDB)	(°CWB)	TC	TC	TC	TC	TC
-15.0	-16.0	3.12	3.05	2.98	2.90	2.83
-10.0	-11.0	3.63	3.54	3.46	3.37	3.28
-5.0	-7.0	3.83	3.74	3.65	3.56	3.47
0.0	-2.0	4.38	4.28	4.18	4.07	3.97
5.0	3.0	5.04	4.92	4.80	4.68	4.56
7.0	6.0	5.04	4.92	4.80	4.68	4.56
10.0	8.0	5.04	4.92	4.80	4.68	4.56
15.0	10.0	5.04	4.92	4.80	4.68	4.56
20.0	15.0	5.04	4.92	4.80	4.68	4.56
24.0	18.0	5.04	4.92	4.80	4.68	4.56

Model: AUXG14KVLA

Outdoor temperature		Indoor temperature (°CDB)				
		16.0	18.0	20.0	22.0	24.0
(°CDB)	(°CWB)	TC	TC	TC	TC	TC
-15.0	-16.0	3.65	3.56	3.47	3.39	3.30
-10.0	-11.0	4.23	4.13	4.03	3.93	3.83
-5.0	-7.0	4.47	4.36	4.26	4.15	4.04
0.0	-2.0	5.12	4.99	4.87	4.75	4.63
5.0	3.0	5.88	5.74	5.60	5.46	5.32
7.0	6.0	5.88	5.74	5.60	5.46	5.32
10.0	8.0	5.88	5.74	5.60	5.46	5.32
15.0	10.0	5.88	5.74	5.60	5.46	5.32
20.0	15.0	5.88	5.74	5.60	5.46	5.32
24.0	18.0	5.88	5.74	5.60	5.46	5.32

Model: AUXG18KVLA

Outdoor temperature		Indoor temperature (°CDB)				
		16.0	18.0	20.0	22.0	24.0
(°CDB)	(°CWB)	TC	TC	TC	TC	TC
-15.0	-16.0	4.39	4.29	4.19	4.08	3.98
-10.0	-11.0	5.10	4.98	4.86	4.74	4.62
-5.0	-7.0	5.39	5.26	5.13	5.00	4.87
0.0	-2.0	6.17	6.02	5.87	5.73	5.58
5.0	3.0	7.09	6.92	6.75	6.58	6.41
7.0	6.0	7.09	6.92	6.75	6.58	6.41
10.0	8.0	7.09	6.92	6.75	6.58	6.41
15.0	10.0	7.09	6.92	6.75	6.58	6.41
20.0	15.0	7.09	6.92	6.75	6.58	6.41
24.0	18.0	7.09	6.92	6.75	6.58	6.41

OUTDOOR UNIT
AOEG36KBTA5

Model: AUXG22KVLA

Outdoor temperature		Indoor temperature (°CDB)				
		16.0	18.0	20.0	22.0	24.0
(°CDB)	(°CWB)	TC	TC	TC	TC	TC
-15.0	-16.0	5.55	5.41	5.28	5.15	5.02
-10.0	-11.0	6.44	6.29	6.13	5.98	5.83
-5.0	-7.0	6.80	6.64	6.48	6.31	6.15
0.0	-2.0	7.78	7.60	7.41	7.23	7.04
5.0	3.0	8.95	8.73	8.52	8.31	8.09
7.0	6.0	8.95	8.73	8.52	8.31	8.09
10.0	8.0	8.95	8.73	8.52	8.31	8.09
15.0	10.0	8.95	8.73	8.52	8.31	8.09
20.0	15.0	8.95	8.73	8.52	8.31	8.09
24.0	18.0	8.95	8.73	8.52	8.31	8.09

NOTES:

- TC: Total Capacity (kW)
- Values mentioned in the table are based on the following conditions:
  - Pipe length: 5 m, Height difference: 0 m (Outdoor unit—Indoor unit)

OUTDOOR UNIT
AOEG36KBTA5

● Mini duct type

Model: ARXG07KSLAP

Outdoor temperature		Indoor temperature (°CDB)				
		16.0	18.0	20.0	22.0	24.0
(°CDB)	(°CWB)	TC	TC	TC	TC	TC
-15.0	-16.0	1.82	1.78	1.74	1.69	1.65
-10.0	-11.0	2.12	2.07	2.02	1.97	1.92
-5.0	-7.0	2.23	2.18	2.13	2.07	2.02
0.0	-2.0	2.56	2.50	2.44	2.38	2.31
5.0	3.0	2.94	2.87	2.80	2.73	2.66
7.0	6.0	2.94	2.87	2.80	2.73	2.66
10.0	8.0	2.94	2.87	2.80	2.73	2.66
15.0	10.0	2.94	2.87	2.80	2.73	2.66
20.0	15.0	2.94	2.87	2.80	2.73	2.66
24.0	18.0	2.94	2.87	2.80	2.73	2.66

Model: ARXG09KSLAP

Outdoor temperature		Indoor temperature (°CDB)				
		16.0	18.0	20.0	22.0	24.0
(°CDB)	(°CWB)	TC	TC	TC	TC	TC
-15.0	-16.0	2.34	2.29	2.23	2.18	2.12
-10.0	-11.0	2.72	2.66	2.59	2.53	2.46
-5.0	-7.0	2.87	2.80	2.74	2.67	2.60
0.0	-2.0	3.29	3.21	3.13	3.05	2.98
5.0	3.0	3.78	3.69	3.60	3.51	3.42
7.0	6.0	3.78	3.69	3.60	3.51	3.42
10.0	8.0	3.78	3.69	3.60	3.51	3.42
15.0	10.0	3.78	3.69	3.60	3.51	3.42
20.0	15.0	3.78	3.69	3.60	3.51	3.42
24.0	18.0	3.78	3.69	3.60	3.51	3.42

Model: ARXG12KSLAP

Outdoor temperature		Indoor temperature (°CDB)				
		16.0	18.0	20.0	22.0	24.0
(°CDB)	(°CWB)	TC	TC	TC	TC	TC
-15.0	-16.0	3.12	3.05	2.98	2.90	2.83
-10.0	-11.0	3.63	3.54	3.46	3.37	3.28
-5.0	-7.0	3.83	3.74	3.65	3.56	3.47
0.0	-2.0	4.38	4.28	4.18	4.07	3.97
5.0	3.0	5.04	4.92	4.80	4.68	4.56
7.0	6.0	5.04	4.92	4.80	4.68	4.56
10.0	8.0	5.04	4.92	4.80	4.68	4.56
15.0	10.0	5.04	4.92	4.80	4.68	4.56
20.0	15.0	5.04	4.92	4.80	4.68	4.56
24.0	18.0	5.04	4.92	4.80	4.68	4.56

Model: ARXG14KSLAP

Outdoor temperature		Indoor temperature (°CDB)				
		16.0	18.0	20.0	22.0	24.0
(°CDB)	(°CWB)	TC	TC	TC	TC	TC
-15.0	-16.0	3.65	3.56	3.47	3.39	3.30
-10.0	-11.0	4.23	4.13	4.03	3.93	3.83
-5.0	-7.0	4.47	4.36	4.26	4.15	4.04
0.0	-2.0	5.12	4.99	4.87	4.75	4.63
5.0	3.0	5.88	5.74	5.60	5.46	5.32
7.0	6.0	5.88	5.74	5.60	5.46	5.32
10.0	8.0	5.88	5.74	5.60	5.46	5.32
15.0	10.0	5.88	5.74	5.60	5.46	5.32
20.0	15.0	5.88	5.74	5.60	5.46	5.32
24.0	18.0	5.88	5.74	5.60	5.46	5.32

OUTDOOR UNIT
AOEG36KBTA5

Model: ARXG18KSLAP

Outdoor temperature		Indoor temperature (°CDB)				
		16.0	18.0	20.0	22.0	24.0
(°CDB)	(°CWB)	TC	TC	TC	TC	TC
-15.0	-16.0	4.39	4.29	4.19	4.08	3.98
-10.0	-11.0	5.10	4.98	4.86	4.74	4.62
-5.0	-7.0	5.39	5.26	5.13	5.00	4.87
0.0	-2.0	6.17	6.02	5.87	5.73	5.58
5.0	3.0	7.09	6.92	6.75	6.58	6.41
7.0	6.0	7.09	6.92	6.75	6.58	6.41
10.0	8.0	7.09	6.92	6.75	6.58	6.41
15.0	10.0	7.09	6.92	6.75	6.58	6.41
20.0	15.0	7.09	6.92	6.75	6.58	6.41
24.0	18.0	7.09	6.92	6.75	6.58	6.41

NOTES:

- TC: Total Capacity (kW)
- Values mentioned in the table are based on the following conditions:
  - Pipe length: 5 m, Height difference: 0 m [Outdoor unit—Indoor unit]

OUTDOOR UNIT
AOEG36KBTA5

● Slim duct type

Model: ARXG07KLLAP

Outdoor temperature		Indoor temperature (°CDB)				
		16.0	18.0	20.0	22.0	24.0
(°CDB)	(°CWB)	TC	TC	TC	TC	TC
-15.0	-16.0	1.82	1.78	1.74	1.69	1.65
-10.0	-11.0	2.12	2.07	2.02	1.97	1.92
-5.0	-7.0	2.23	2.18	2.13	2.07	2.02
0.0	-2.0	2.56	2.50	2.44	2.38	2.31
5.0	3.0	2.94	2.87	2.80	2.73	2.66
7.0	6.0	2.94	2.87	2.80	2.73	2.66
10.0	8.0	2.94	2.87	2.80	2.73	2.66
15.0	10.0	2.94	2.87	2.80	2.73	2.66
20.0	15.0	2.94	2.87	2.80	2.73	2.66
24.0	18.0	2.94	2.87	2.80	2.73	2.66

Model: ARXG09KLLAP

Outdoor temperature		Indoor temperature (°CDB)				
		16.0	18.0	20.0	22.0	24.0
(°CDB)	(°CWB)	TC	TC	TC	TC	TC
-15.0	-16.0	2.34	2.29	2.23	2.18	2.12
-10.0	-11.0	2.72	2.66	2.59	2.53	2.46
-5.0	-7.0	2.87	2.80	2.74	2.67	2.60
0.0	-2.0	3.29	3.21	3.13	3.05	2.98
5.0	3.0	3.78	3.69	3.60	3.51	3.42
7.0	6.0	3.78	3.69	3.60	3.51	3.42
10.0	8.0	3.78	3.69	3.60	3.51	3.42
15.0	10.0	3.78	3.69	3.60	3.51	3.42
20.0	15.0	3.78	3.69	3.60	3.51	3.42
24.0	18.0	3.78	3.69	3.60	3.51	3.42

Model: ARXG12KLLAP

Outdoor temperature		Indoor temperature (°CDB)				
		16.0	18.0	20.0	22.0	24.0
(°CDB)	(°CWB)	TC	TC	TC	TC	TC
-15.0	-16.0	3.12	3.05	2.98	2.90	2.83
-10.0	-11.0	3.63	3.54	3.46	3.37	3.28
-5.0	-7.0	3.83	3.74	3.65	3.56	3.47
0.0	-2.0	4.38	4.28	4.18	4.07	3.97
5.0	3.0	5.04	4.92	4.80	4.68	4.56
7.0	6.0	5.04	4.92	4.80	4.68	4.56
10.0	8.0	5.04	4.92	4.80	4.68	4.56
15.0	10.0	5.04	4.92	4.80	4.68	4.56
20.0	15.0	5.04	4.92	4.80	4.68	4.56
24.0	18.0	5.04	4.92	4.80	4.68	4.56

Model: ARXG14KLLAP

Outdoor temperature		Indoor temperature (°CDB)				
		16.0	18.0	20.0	22.0	24.0
(°CDB)	(°CWB)	TC	TC	TC	TC	TC
-15.0	-16.0	3.65	3.56	3.47	3.39	3.30
-10.0	-11.0	4.23	4.13	4.03	3.93	3.83
-5.0	-7.0	4.47	4.36	4.26	4.15	4.04
0.0	-2.0	5.12	4.99	4.87	4.75	4.63
5.0	3.0	5.88	5.74	5.60	5.46	5.32
7.0	6.0	5.88	5.74	5.60	5.46	5.32
10.0	8.0	5.88	5.74	5.60	5.46	5.32
15.0	10.0	5.88	5.74	5.60	5.46	5.32
20.0	15.0	5.88	5.74	5.60	5.46	5.32
24.0	18.0	5.88	5.74	5.60	5.46	5.32

OUTDOOR UNIT
AOEG36KBTA5

Model: ARXG18KLLAP

Outdoor temperature		Indoor temperature (°CDB)				
		16.0	18.0	20.0	22.0	24.0
(°CDB)	(°CWB)	TC	TC	TC	TC	TC
-15.0	-16.0	4.39	4.29	4.19	4.08	3.98
-10.0	-11.0	5.10	4.98	4.86	4.74	4.62
-5.0	-7.0	5.39	5.26	5.13	5.00	4.87
0.0	-2.0	6.17	6.02	5.87	5.73	5.58
5.0	3.0	7.09	6.92	6.75	6.58	6.41
7.0	6.0	7.09	6.92	6.75	6.58	6.41
10.0	8.0	7.09	6.92	6.75	6.58	6.41
15.0	10.0	7.09	6.92	6.75	6.58	6.41
20.0	15.0	7.09	6.92	6.75	6.58	6.41
24.0	18.0	7.09	6.92	6.75	6.58	6.41

NOTES:

- TC: Total Capacity (kW)
- Values mentioned in the table are based on the following conditions:
  - Pipe length: 5 m, Height difference: 0 m (Outdoor unit—Indoor unit)

● Medium static pressure duct type (ARXG22KMLB)

Model: ARXG22KMLB

Outdoor temperature		Indoor temperature (°CDB)				
		16.0	18.0	20.0	22.0	24.0
(°CDB)	(°CWB)	TC	TC	TC	TC	TC
-15.0	-16.0	5.55	5.41	5.28	5.15	5.02
-10.0	-11.0	6.44	6.29	6.13	5.98	5.83
-5.0	-7.0	6.80	6.64	6.48	6.31	6.15
0.0	-2.0	7.78	7.60	7.41	7.23	7.04
5.0	3.0	8.95	8.73	8.52	8.31	8.09
7.0	6.0	8.95	8.73	8.52	8.31	8.09
10.0	8.0	8.95	8.73	8.52	8.31	8.09
15.0	10.0	8.95	8.73	8.52	8.31	8.09
20.0	15.0	8.95	8.73	8.52	8.31	8.09
24.0	18.0	8.95	8.73	8.52	8.31	8.09

NOTES:

- TC: Total Capacity (kW)
- Values mentioned in the table are based on the following conditions:
  - Pipe length: 5 m, Height difference: 0 m (Outdoor unit—Indoor unit)

● Medium static pressure duct type (ARXH12–22KMTAP)

Model: ARXH12KMTAP

Outdoor temperature		Indoor temperature (°CDB)				
		16.0	18.0	20.0	22.0	24.0
(°CDB)	(°CWB)	TC	TC	TC	TC	TC
-15.0	-16.0	3.12	3.05	2.98	2.90	2.83
-10.0	-11.0	3.63	3.54	3.46	3.37	3.28
-5.0	-7.0	3.83	3.74	3.65	3.56	3.47
0.0	-2.0	4.38	4.28	4.18	4.07	3.97
5.0	3.0	5.04	4.92	4.80	4.68	4.56
7.0	6.0	5.04	4.92	4.80	4.68	4.56
10.0	8.0	5.04	4.92	4.80	4.68	4.56
15.0	10.0	5.04	4.92	4.80	4.68	4.56
20.0	15.0	5.04	4.92	4.80	4.68	4.56
24.0	18.0	5.04	4.92	4.80	4.68	4.56

Model: ARXH14KMTAP

Outdoor temperature		Indoor temperature (°CDB)				
		16.0	18.0	20.0	22.0	24.0
(°CDB)	(°CWB)	TC	TC	TC	TC	TC
-15.0	-16.0	3.65	3.56	3.47	3.39	3.30
-10.0	-11.0	4.23	4.13	4.03	3.93	3.83
-5.0	-7.0	4.47	4.36	4.26	4.15	4.04
0.0	-2.0	5.12	4.99	4.87	4.75	4.63
5.0	3.0	5.88	5.74	5.60	5.46	5.32
7.0	6.0	5.88	5.74	5.60	5.46	5.32
10.0	8.0	5.88	5.74	5.60	5.46	5.32
15.0	10.0	5.88	5.74	5.60	5.46	5.32
20.0	15.0	5.88	5.74	5.60	5.46	5.32
24.0	18.0	5.88	5.74	5.60	5.46	5.32

Model: ARXH18KMTAP

Outdoor temperature		Indoor temperature (°CDB)				
		16.0	18.0	20.0	22.0	24.0
(°CDB)	(°CWB)	TC	TC	TC	TC	TC
-15.0	-16.0	4.39	4.29	4.19	4.08	3.98
-10.0	-11.0	5.10	4.98	4.86	4.74	4.62
-5.0	-7.0	5.39	5.26	5.13	5.00	4.87
0.0	-2.0	6.17	6.02	5.87	5.73	5.58
5.0	3.0	7.09	6.92	6.75	6.58	6.41
7.0	6.0	7.09	6.92	6.75	6.58	6.41
10.0	8.0	7.09	6.92	6.75	6.58	6.41
15.0	10.0	7.09	6.92	6.75	6.58	6.41
20.0	15.0	7.09	6.92	6.75	6.58	6.41
24.0	18.0	7.09	6.92	6.75	6.58	6.41

Model: ARXH22KMTAP

Outdoor temperature		Indoor temperature (°CDB)				
		16.0	18.0	20.0	22.0	24.0
(°CDB)	(°CWB)	TC	TC	TC	TC	TC
-15.0	-16.0	5.55	5.41	5.28	5.15	5.02
-10.0	-11.0	6.44	6.29	6.13	5.98	5.83
-5.0	-7.0	6.80	6.64	6.48	6.31	6.15
0.0	-2.0	7.78	7.60	7.41	7.23	7.04
5.0	3.0	8.95	8.73	8.52	8.31	8.09
7.0	6.0	8.95	8.73	8.52	8.31	8.09
10.0	8.0	8.95	8.73	8.52	8.31	8.09
15.0	10.0	8.95	8.73	8.52	8.31	8.09
20.0	15.0	8.95	8.73	8.52	8.31	8.09
24.0	18.0	8.95	8.73	8.52	8.31	8.09

NOTES:

- TC: Total Capacity (kW)
- Values mentioned in the table are based on the following conditions:
  - Pipe length: 5 m, Height difference: 0 m (Outdoor unit—Indoor unit)

OUTDOOR UNIT AOEG36KBTA5

● Wall mounted type

Model: ASEH07KMCG, ASEH07KMCG-B

Outdoor temperature		Indoor temperature (°CDB)				
		16.0	18.0	20.0	22.0	24.0
(°CDB)	(°CWB)	TC	TC	TC	TC	TC
-15.0	-16.0	1.82	1.78	1.74	1.69	1.65
-10.0	-11.0	2.12	2.07	2.02	1.97	1.92
-5.0	-7.0	2.23	2.18	2.13	2.07	2.02
0.0	-2.0	2.56	2.50	2.44	2.38	2.31
5.0	3.0	2.94	2.87	2.80	2.73	2.66
7.0	6.0	2.94	2.87	2.80	2.73	2.66
10.0	8.0	2.94	2.87	2.80	2.73	2.66
15.0	10.0	2.94	2.87	2.80	2.73	2.66
20.0	15.0	2.94	2.87	2.80	2.73	2.66
24.0	18.0	2.94	2.87	2.80	2.73	2.66

Model: ASEH09KMCG, ASEH09KMCG-B

Outdoor temperature		Indoor temperature (°CDB)				
		16.0	18.0	20.0	22.0	24.0
(°CDB)	(°CWB)	TC	TC	TC	TC	TC
-15.0	-16.0	2.34	2.29	2.23	2.18	2.12
-10.0	-11.0	2.72	2.66	2.59	2.53	2.46
-5.0	-7.0	2.87	2.80	2.74	2.67	2.60
0.0	-2.0	3.29	3.21	3.13	3.05	2.98
5.0	3.0	3.78	3.69	3.60	3.51	3.42
7.0	6.0	3.78	3.69	3.60	3.51	3.42
10.0	8.0	3.78	3.69	3.60	3.51	3.42
15.0	10.0	3.78	3.69	3.60	3.51	3.42
20.0	15.0	3.78	3.69	3.60	3.51	3.42
24.0	18.0	3.78	3.69	3.60	3.51	3.42

Model: ASEH12KMCG, ASEH12KMCG-B

Outdoor temperature		Indoor temperature (°CDB)				
		16.0	18.0	20.0	22.0	24.0
(°CDB)	(°CWB)	TC	TC	TC	TC	TC
-15.0	-16.0	3.12	3.05	2.98	2.90	2.83
-10.0	-11.0	3.63	3.54	3.46	3.37	3.28
-5.0	-7.0	3.83	3.74	3.65	3.56	3.47
0.0	-2.0	4.38	4.28	4.18	4.07	3.97
5.0	3.0	5.04	4.92	4.80	4.68	4.56
7.0	6.0	5.04	4.92	4.80	4.68	4.56
10.0	8.0	5.04	4.92	4.80	4.68	4.56
15.0	10.0	5.04	4.92	4.80	4.68	4.56
20.0	15.0	5.04	4.92	4.80	4.68	4.56
24.0	18.0	5.04	4.92	4.80	4.68	4.56

Model: ASEH14KMCG, ASEH14KMCG-B

Outdoor temperature		Indoor temperature (°CDB)				
		16.0	18.0	20.0	22.0	24.0
(°CDB)	(°CWB)	TC	TC	TC	TC	TC
-15.0	-16.0	3.65	3.56	3.47	3.39	3.30
-10.0	-11.0	4.23	4.13	4.03	3.93	3.83
-5.0	-7.0	4.47	4.36	4.26	4.15	4.04
0.0	-2.0	5.12	4.99	4.87	4.75	4.63
5.0	3.0	5.88	5.74	5.60	5.46	5.32
7.0	6.0	5.88	5.74	5.60	5.46	5.32
10.0	8.0	5.88	5.74	5.60	5.46	5.32
15.0	10.0	5.88	5.74	5.60	5.46	5.32
20.0	15.0	5.88	5.74	5.60	5.46	5.32
24.0	18.0	5.88	5.74	5.60	5.46	5.32

OUTDOOR UNIT
AOEG36KBTA5

Model: ASEG07KETF, ASEG07KETF-B

Outdoor temperature		Indoor temperature (°CDB)				
		16.0	18.0	20.0	22.0	24.0
(°CDB)	(°CWB)	TC	TC	TC	TC	TC
-15.0	-16.0	1.82	1.78	1.74	1.69	1.65
-10.0	-11.0	2.12	2.07	2.02	1.97	1.92
-5.0	-7.0	2.23	2.18	2.13	2.07	2.02
0.0	-2.0	2.56	2.50	2.44	2.38	2.31
5.0	3.0	2.94	2.87	2.80	2.73	2.66
7.0	6.0	2.94	2.87	2.80	2.73	2.66
10.0	8.0	2.94	2.87	2.80	2.73	2.66
15.0	10.0	2.94	2.87	2.80	2.73	2.66
20.0	15.0	2.94	2.87	2.80	2.73	2.66
24.0	18.0	2.94	2.87	2.80	2.73	2.66

Model: ASEG09KETF, ASEG09KETF-B

Outdoor temperature		Indoor temperature (°CDB)				
		16.0	18.0	20.0	22.0	24.0
(°CDB)	(°CWB)	TC	TC	TC	TC	TC
-15.0	-16.0	2.34	2.29	2.23	2.18	2.12
-10.0	-11.0	2.72	2.66	2.59	2.53	2.46
-5.0	-7.0	2.87	2.80	2.74	2.67	2.60
0.0	-2.0	3.29	3.21	3.13	3.05	2.98
5.0	3.0	3.78	3.69	3.60	3.51	3.42
7.0	6.0	3.78	3.69	3.60	3.51	3.42
10.0	8.0	3.78	3.69	3.60	3.51	3.42
15.0	10.0	3.78	3.69	3.60	3.51	3.42
20.0	15.0	3.78	3.69	3.60	3.51	3.42
24.0	18.0	3.78	3.69	3.60	3.51	3.42

Model: ASEG12KETF, ASEG12KETF-B

Outdoor temperature		Indoor temperature (°CDB)				
		16.0	18.0	20.0	22.0	24.0
(°CDB)	(°CWB)	TC	TC	TC	TC	TC
-15.0	-16.0	3.12	3.05	2.98	2.90	2.83
-10.0	-11.0	3.63	3.54	3.46	3.37	3.28
-5.0	-7.0	3.83	3.74	3.65	3.56	3.47
0.0	-2.0	4.38	4.28	4.18	4.07	3.97
5.0	3.0	5.04	4.92	4.80	4.68	4.56
7.0	6.0	5.04	4.92	4.80	4.68	4.56
10.0	8.0	5.04	4.92	4.80	4.68	4.56
15.0	10.0	5.04	4.92	4.80	4.68	4.56
20.0	15.0	5.04	4.92	4.80	4.68	4.56
24.0	18.0	5.04	4.92	4.80	4.68	4.56

Model: ASEG14KETF, ASEG14KETF-B

Outdoor temperature		Indoor temperature (°CDB)				
		16.0	18.0	20.0	22.0	24.0
(°CDB)	(°CWB)	TC	TC	TC	TC	TC
-15.0	-16.0	3.65	3.56	3.47	3.39	3.30
-10.0	-11.0	4.23	4.13	4.03	3.93	3.83
-5.0	-7.0	4.47	4.36	4.26	4.15	4.04
0.0	-2.0	5.12	4.99	4.87	4.75	4.63
5.0	3.0	5.88	5.74	5.60	5.46	5.32
7.0	6.0	5.88	5.74	5.60	5.46	5.32
10.0	8.0	5.88	5.74	5.60	5.46	5.32
15.0	10.0	5.88	5.74	5.60	5.46	5.32
20.0	15.0	5.88	5.74	5.60	5.46	5.32
24.0	18.0	5.88	5.74	5.60	5.46	5.32

Model: ASEH07KGTG

Outdoor temperature		Indoor temperature (°CDB)				
		16.0	18.0	20.0	22.0	24.0
(°CDB)	(°CWB)	TC	TC	TC	TC	TC
-15.0	-16.0	1.82	1.78	1.74	1.69	1.65
-10.0	-11.0	2.12	2.07	2.02	1.97	1.92
-5.0	-7.0	2.23	2.18	2.13	2.07	2.02
0.0	-2.0	2.56	2.50	2.44	2.38	2.31
5.0	3.0	2.94	2.87	2.80	2.73	2.66
7.0	6.0	2.94	2.87	2.80	2.73	2.66
10.0	8.0	2.94	2.87	2.80	2.73	2.66
15.0	10.0	2.94	2.87	2.80	2.73	2.66
20.0	15.0	2.94	2.87	2.80	2.73	2.66
24.0	18.0	2.94	2.87	2.80	2.73	2.66

Model: ASEH09KGTG

Outdoor temperature		Indoor temperature (°CDB)				
		16.0	18.0	20.0	22.0	24.0
(°CDB)	(°CWB)	TC	TC	TC	TC	TC
-15.0	-16.0	2.34	2.29	2.23	2.18	2.12
-10.0	-11.0	2.72	2.66	2.59	2.53	2.46
-5.0	-7.0	2.87	2.80	2.74	2.67	2.60
0.0	-2.0	3.29	3.21	3.13	3.05	2.98
5.0	3.0	3.78	3.69	3.60	3.51	3.42
7.0	6.0	3.78	3.69	3.60	3.51	3.42
10.0	8.0	3.78	3.69	3.60	3.51	3.42
15.0	10.0	3.78	3.69	3.60	3.51	3.42
20.0	15.0	3.78	3.69	3.60	3.51	3.42
24.0	18.0	3.78	3.69	3.60	3.51	3.42

Model: ASEH12KGTG

Outdoor temperature		Indoor temperature (°CDB)				
		16.0	18.0	20.0	22.0	24.0
(°CDB)	(°CWB)	TC	TC	TC	TC	TC
-15.0	-16.0	3.12	3.05	2.98	2.90	2.83
-10.0	-11.0	3.63	3.54	3.46	3.37	3.28
-5.0	-7.0	3.83	3.74	3.65	3.56	3.47
0.0	-2.0	4.38	4.28	4.18	4.07	3.97
5.0	3.0	5.04	4.92	4.80	4.68	4.56
7.0	6.0	5.04	4.92	4.80	4.68	4.56
10.0	8.0	5.04	4.92	4.80	4.68	4.56
15.0	10.0	5.04	4.92	4.80	4.68	4.56
20.0	15.0	5.04	4.92	4.80	4.68	4.56
24.0	18.0	5.04	4.92	4.80	4.68	4.56

Model: ASEH14KGTG

Outdoor temperature		Indoor temperature (°CDB)				
		16.0	18.0	20.0	22.0	24.0
(°CDB)	(°CWB)	TC	TC	TC	TC	TC
-15.0	-16.0	3.65	3.56	3.47	3.39	3.30
-10.0	-11.0	4.23	4.13	4.03	3.93	3.83
-5.0	-7.0	4.47	4.36	4.26	4.15	4.04
0.0	-2.0	5.12	4.99	4.87	4.75	4.63
5.0	3.0	5.88	5.74	5.60	5.46	5.32
7.0	6.0	5.88	5.74	5.60	5.46	5.32
10.0	8.0	5.88	5.74	5.60	5.46	5.32
15.0	10.0	5.88	5.74	5.60	5.46	5.32
20.0	15.0	5.88	5.74	5.60	5.46	5.32
24.0	18.0	5.88	5.74	5.60	5.46	5.32

Model: ASEH05KNCA

Outdoor temperature		Indoor temperature (°CDB)				
		16.0	18.0	20.0	22.0	24.0
(°CDB)	(°CWB)	TC	TC	TC	TC	TC
-15.0	-16.0	1.37	1.33	1.30	1.27	1.24
-10.0	-11.0	1.59	1.55	1.51	1.47	1.44
-5.0	-7.0	1.68	1.64	1.60	1.56	1.52
0.0	-2.0	1.92	1.87	1.83	1.78	1.74
5.0	3.0	2.21	2.15	2.10	2.05	2.00
7.0	6.0	2.21	2.15	2.10	2.05	2.00
10.0	8.0	2.21	2.15	2.10	2.05	2.00
15.0	10.0	2.21	2.15	2.10	2.05	2.00
20.0	15.0	2.21	2.15	2.10	2.05	2.00
24.0	18.0	2.21	2.15	2.10	2.05	2.00

Model: ASEH07KNCA

Outdoor temperature		Indoor temperature (°CDB)				
		16.0	18.0	20.0	22.0	24.0
(°CDB)	(°CWB)	TC	TC	TC	TC	TC
-15.0	-16.0	1.82	1.78	1.74	1.69	1.65
-10.0	-11.0	2.12	2.07	2.02	1.97	1.92
-5.0	-7.0	2.23	2.18	2.13	2.07	2.02
0.0	-2.0	2.56	2.50	2.44	2.38	2.31
5.0	3.0	2.94	2.87	2.80	2.73	2.66
7.0	6.0	2.94	2.87	2.80	2.73	2.66
10.0	8.0	2.94	2.87	2.80	2.73	2.66
15.0	10.0	2.94	2.87	2.80	2.73	2.66
20.0	15.0	2.94	2.87	2.80	2.73	2.66
24.0	18.0	2.94	2.87	2.80	2.73	2.66

Model: ASEH09KNCA

Outdoor temperature		Indoor temperature (°CDB)				
		16.0	18.0	20.0	22.0	24.0
(°CDB)	(°CWB)	TC	TC	TC	TC	TC
-15.0	-16.0	2.34	2.29	2.23	2.18	2.12
-10.0	-11.0	2.72	2.66	2.59	2.53	2.46
-5.0	-7.0	2.87	2.80	2.74	2.67	2.60
0.0	-2.0	3.29	3.21	3.13	3.05	2.98
5.0	3.0	3.78	3.69	3.60	3.51	3.42
7.0	6.0	3.78	3.69	3.60	3.51	3.42
10.0	8.0	3.78	3.69	3.60	3.51	3.42
15.0	10.0	3.78	3.69	3.60	3.51	3.42
20.0	15.0	3.78	3.69	3.60	3.51	3.42
24.0	18.0	3.78	3.69	3.60	3.51	3.42

Model: ASEH12KNCA

Outdoor temperature		Indoor temperature (°CDB)				
		16.0	18.0	20.0	22.0	24.0
(°CDB)	(°CWB)	TC	TC	TC	TC	TC
-15.0	-16.0	2.93	2.86	2.79	2.72	2.65
-10.0	-11.0	3.40	3.32	3.24	3.16	3.08
-5.0	-7.0	3.59	3.51	3.42	3.33	3.25
0.0	-2.0	4.11	4.01	3.92	3.82	3.72
5.0	3.0	4.73	4.61	4.50	4.39	4.28
7.0	6.0	4.73	4.61	4.50	4.39	4.28
10.0	8.0	4.73	4.61	4.50	4.39	4.28
15.0	10.0	4.73	4.61	4.50	4.39	4.28
20.0	15.0	4.73	4.61	4.50	4.39	4.28
24.0	18.0	4.73	4.61	4.50	4.39	4.28

Model: ASEG18KMTE

Outdoor temperature		Indoor temperature (°CDB)				
		16.0	18.0	20.0	22.0	24.0
(°CDB)	(°CWB)	TC	TC	TC	TC	TC
-15.0	-16.0	4.39	4.29	4.19	4.08	3.98
-10.0	-11.0	5.10	4.98	4.86	4.74	4.62
-5.0	-7.0	5.39	5.26	5.13	5.00	4.87
0.0	-2.0	6.17	6.02	5.87	5.73	5.58
5.0	3.0	7.09	6.92	6.75	6.58	6.41
7.0	6.0	7.09	6.92	6.75	6.58	6.41
10.0	8.0	7.09	6.92	6.75	6.58	6.41
15.0	10.0	7.09	6.92	6.75	6.58	6.41
20.0	15.0	7.09	6.92	6.75	6.58	6.41
24.0	18.0	7.09	6.92	6.75	6.58	6.41

Model: ASEG22KMTE

Outdoor temperature		Indoor temperature (°CDB)				
		16.0	18.0	20.0	22.0	24.0
(°CDB)	(°CWB)	TC	TC	TC	TC	TC
-15.0	-16.0	5.55	5.41	5.28	5.15	5.02
-10.0	-11.0	6.44	6.29	6.13	5.98	5.83
-5.0	-7.0	6.80	6.64	6.48	6.31	6.15
0.0	-2.0	7.78	7.60	7.41	7.23	7.04
5.0	3.0	8.95	8.73	8.52	8.31	8.09
7.0	6.0	8.95	8.73	8.52	8.31	8.09
10.0	8.0	8.95	8.73	8.52	8.31	8.09
15.0	10.0	8.95	8.73	8.52	8.31	8.09
20.0	15.0	8.95	8.73	8.52	8.31	8.09
24.0	18.0	8.95	8.73	8.52	8.31	8.09

Model: ASEG24KMTE

Outdoor temperature		Indoor temperature (°CDB)				
		16.0	18.0	20.0	22.0	24.0
(°CDB)	(°CWB)	TC	TC	TC	TC	TC
-15.0	-16.0	6.05	5.90	5.76	5.62	5.47
-10.0	-11.0	7.02	6.86	6.69	6.52	6.35
-5.0	-7.0	7.41	7.24	7.06	6.88	6.71
0.0	-2.0	8.49	8.28	8.08	7.88	7.68
5.0	3.0	9.75	9.52	9.29	9.06	8.83
7.0	6.0	9.75	9.52	9.29	9.06	8.83
10.0	8.0	9.75	9.52	9.29	9.06	8.83
15.0	10.0	9.75	9.52	9.29	9.06	8.83
20.0	15.0	9.75	9.52	9.29	9.06	8.83
24.0	18.0	9.75	9.52	9.29	9.06	8.83

NOTES:

- TC: Total Capacity (kW)
- Values mentioned in the table are based on the following conditions:
  - Pipe length: 5 m, Height difference: 0 m (Outdoor unit—Indoor unit)

● Ceiling type

Model: ABEG18KRTA

Outdoor temperature		Indoor temperature (°CDB)				
		16.0	18.0	20.0	22.0	24.0
(°CDB)	(°CWB)	TC	TC	TC	TC	TC
-15.0	-16.0	4.39	4.29	4.19	4.08	3.98
-10.0	-11.0	5.10	4.98	4.86	4.74	4.62
-5.0	-7.0	5.39	5.26	5.13	5.00	4.87
0.0	-2.0	6.17	6.02	5.87	5.73	5.58
5.0	3.0	7.09	6.92	6.75	6.58	6.41
7.0	6.0	7.09	6.92	6.75	6.58	6.41
10.0	8.0	7.09	6.92	6.75	6.58	6.41
15.0	10.0	7.09	6.92	6.75	6.58	6.41
20.0	15.0	7.09	6.92	6.75	6.58	6.41
24.0	18.0	7.09	6.92	6.75	6.58	6.41

Model: ABEG22KRTA

Outdoor temperature		Indoor temperature (°CDB)				
		16.0	18.0	20.0	22.0	24.0
(°CDB)	(°CWB)	TC	TC	TC	TC	TC
-15.0	-16.0	5.55	5.41	5.28	5.15	5.02
-10.0	-11.0	6.44	6.29	6.13	5.98	5.83
-5.0	-7.0	6.80	6.64	6.48	6.31	6.15
0.0	-2.0	7.78	7.60	7.41	7.23	7.04
5.0	3.0	8.95	8.73	8.52	8.31	8.09
7.0	6.0	8.95	8.73	8.52	8.31	8.09
10.0	8.0	8.95	8.73	8.52	8.31	8.09
15.0	10.0	8.95	8.73	8.52	8.31	8.09
20.0	15.0	8.95	8.73	8.52	8.31	8.09
24.0	18.0	8.95	8.73	8.52	8.31	8.09

NOTES:

- TC: Total Capacity (kW)
- Values mentioned in the table are based on the following conditions:
  - Pipe length: 5 m, Height difference: 0 m (Outdoor unit—Indoor unit)

OUTDOOR UNIT AOEG36KBTA5

● Floor type

Model: AGEG09KVCA

Outdoor temperature		Indoor temperature (°CDB)				
		16.0	18.0	20.0	22.0	24.0
(°CDB)	(°CWB)	TC	TC	TC	TC	TC
-15.0	-16.0	2.34	2.29	2.23	2.18	2.12
-10.0	-11.0	2.72	2.66	2.59	2.53	2.46
-5.0	-7.0	2.87	2.80	2.74	2.67	2.60
0.0	-2.0	3.29	3.21	3.13	3.05	2.98
5.0	3.0	3.78	3.69	3.60	3.51	3.42
7.0	6.0	3.78	3.69	3.60	3.51	3.42
10.0	8.0	3.78	3.69	3.60	3.51	3.42
15.0	10.0	3.78	3.69	3.60	3.51	3.42
20.0	15.0	3.78	3.69	3.60	3.51	3.42
24.0	18.0	3.78	3.69	3.60	3.51	3.42

Model: AGEG12KVCA

Outdoor temperature		Indoor temperature (°CDB)				
		16.0	18.0	20.0	22.0	24.0
(°CDB)	(°CWB)	TC	TC	TC	TC	TC
-15.0	-16.0	3.12	3.05	2.98	2.90	2.83
-10.0	-11.0	3.63	3.54	3.46	3.37	3.28
-5.0	-7.0	3.83	3.74	3.65	3.56	3.47
0.0	-2.0	4.38	4.28	4.18	4.07	3.97
5.0	3.0	5.04	4.92	4.80	4.68	4.56
7.0	6.0	5.04	4.92	4.80	4.68	4.56
10.0	8.0	5.04	4.92	4.80	4.68	4.56
15.0	10.0	5.04	4.92	4.80	4.68	4.56
20.0	15.0	5.04	4.92	4.80	4.68	4.56
24.0	18.0	5.04	4.92	4.80	4.68	4.56

Model: AGEG14KVCA

Outdoor temperature		Indoor temperature (°CDB)				
		16.0	18.0	20.0	22.0	24.0
(°CDB)	(°CWB)	TC	TC	TC	TC	TC
-15.0	-16.0	3.65	3.56	3.47	3.39	3.30
-10.0	-11.0	4.23	4.13	4.03	3.93	3.83
-5.0	-7.0	4.47	4.36	4.26	4.15	4.04
0.0	-2.0	5.12	4.99	4.87	4.75	4.63
5.0	3.0	5.88	5.74	5.60	5.46	5.32
7.0	6.0	5.88	5.74	5.60	5.46	5.32
10.0	8.0	5.88	5.74	5.60	5.46	5.32
15.0	10.0	5.88	5.74	5.60	5.46	5.32
20.0	15.0	5.88	5.74	5.60	5.46	5.32
24.0	18.0	5.88	5.74	5.60	5.46	5.32

NOTES:

- TC: Total Capacity (kW)
- Values mentioned in the table are based on the following conditions:
  - Pipe length: 5 m, Height difference: 0 m (Outdoor unit—Indoor unit)

OUTDOOR UNIT AOEG36KBTA5

7. Capacity compensation rate for pipe length and height difference

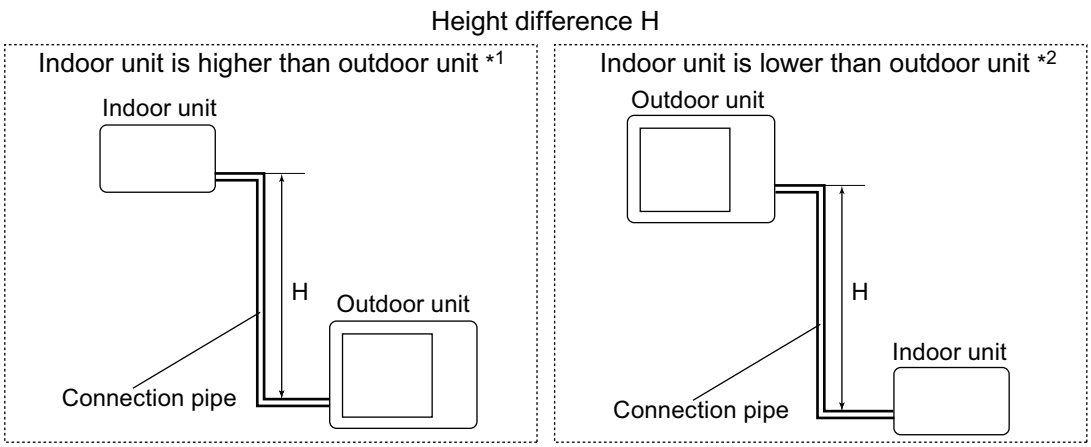

7-1. Model: AOEG36KBTA5

NOTE: Values mentioned in the table are calculated based on the maximum capacity.

■ Indoor unit: 5,000 Btu/h and 7,000 Btu/h

Cooling		Pipe length						
		m	2.5	5	10	15	20	25
Height difference H (m)	Indoor unit is higher than outdoor unit *1	15	—	—	—	0.955	0.941	0.927
		10	—	—	0.976	0.962	0.949	0.935
		5	—	0.992	0.984	0.970	0.956	0.942
		2.5	0.996	0.996	0.988	0.974	0.960	0.946
		0	1.000	1.000	0.992	0.978	0.964	0.950
	Indoor unit is lower than outdoor unit *2	-2.5	1.000	1.000	0.992	0.978	0.964	0.950
		-5	—	1.000	0.992	0.978	0.964	0.950
		-10	—	—	0.992	0.978	0.964	0.950
		-15	—	—	—	0.978	0.964	0.950

Heating		Pipe length						
		m	2.5	5	10	15	20	25
Height difference H (m)	Indoor unit is higher than outdoor unit *1	15	—	—	—	0.976	0.957	0.938
		10	—	—	0.991	0.976	0.957	0.938
		5	—	1.000	0.991	0.976	0.957	0.938
		2.5	1.000	1.000	0.991	0.976	0.957	0.938
		0	1.000	1.000	0.991	0.976	0.957	0.938
	Indoor unit is lower than outdoor unit *2	-2.5	0.998	0.997	0.989	0.974	0.955	0.936
		-5	—	0.995	0.986	0.971	0.952	0.933
		-10	—	—	0.981	0.966	0.947	0.929
		-15	—	—	—	0.961	0.943	0.924

■ Indoor unit: 9,000 Btu/h

Cooling		Pipe length						
		m	2.5	5	10	15	20	25
Height difference H (m)	Indoor unit is higher than outdoor unit *1	15	—	—	—	0.956	0.942	0.928
		10	—	—	0.977	0.963	0.950	0.936
		5	—	0.992	0.985	0.971	0.957	0.943
		2.5	0.996	0.996	0.989	0.975	0.961	0.947
		0	1.000	1.000	0.993	0.979	0.965	0.951
	Indoor unit is lower than outdoor unit *2	-2.5	1.000	1.000	0.993	0.979	0.965	0.951
		-5	—	1.000	0.993	0.979	0.965	0.951
		-10	—	—	0.993	0.979	0.965	0.951
		-15	—	—	—	0.979	0.965	0.951

Heating		Pipe length						
		m	2.5	5	10	15	20	25
Height difference H (m)	Indoor unit is higher than outdoor unit *1	15	—	—	—	0.977	0.958	0.939
		10	—	—	0.993	0.977	0.958	0.939
		5	—	1.000	0.993	0.977	0.958	0.939
		2.5	1.000	1.000	0.993	0.977	0.958	0.939
		0	1.000	1.000	0.993	0.977	0.958	0.939
	Indoor unit is lower than outdoor unit *2	-2.5	0.998	0.997	0.991	0.975	0.956	0.937
		-5	—	0.995	0.988	0.972	0.954	0.934
		-10	—	—	0.983	0.967	0.949	0.930
		-15	—	—	—	0.962	0.944	0.925

■ Indoor unit: 12,000 Btu/h

Cooling		Pipe length						
		m	2.5	5	10	15	20	25
Height difference H (m)	Indoor unit is higher than outdoor unit *1	15	—	—	—	0.937	0.912	0.888
		10	—	—	0.970	0.944	0.919	0.896
		5	—	0.992	0.978	0.952	0.927	0.903
		2.5	0.996	0.996	0.982	0.956	0.930	0.907
		0	1.000	1.000	0.986	0.960	0.934	0.910
	Indoor unit is lower than outdoor unit *2	-2.5	1.000	1.000	0.986	0.960	0.934	0.910
		-5	—	1.000	0.986	0.960	0.934	0.910
		-10	—	—	0.986	0.960	0.934	0.910
		-15	—	—	—	0.960	0.934	0.910

Heating		Pipe length						
		m	2.5	5	10	15	20	25
Height difference H (m)	Indoor unit is higher than outdoor unit *1	15	—	—	—	0.977	0.958	0.938
		10	—	—	0.993	0.977	0.958	0.938
		5	—	1.000	0.993	0.977	0.958	0.938
		2.5	1.000	1.000	0.993	0.977	0.958	0.938
		0	1.000	1.000	0.993	0.977	0.958	0.938
	Indoor unit is lower than outdoor unit *2	-2.5	0.998	0.997	0.991	0.975	0.956	0.936
		-5	—	0.995	0.988	0.972	0.953	0.933
		-10	—	—	0.983	0.967	0.949	0.929
		-15	—	—	—	0.962	0.944	0.924

OUTDOOR UNIT
AOEG36KBTA5

■ Indoor unit: 14,000 Btu/h

Cooling		Pipe length						
		m	2.5	5	10	15	20	25
Height difference H (m)	Indoor unit is higher than outdoor unit *1	15	—	—	—	0.955	0.937	0.922
		10	—	—	0.974	0.962	0.945	0.930
		5	—	0.992	0.982	0.970	0.952	0.937
		2.5	0.996	0.996	0.986	0.974	0.956	0.941
		0	1.000	1.000	0.990	0.978	0.960	0.945
	Indoor unit is lower than outdoor unit *2	-2.5	1.000	1.000	0.990	0.978	0.960	0.945
		-5	—	1.000	0.990	0.978	0.960	0.945
		-10	—	—	0.990	0.978	0.960	0.945
		-15	—	—	—	0.978	0.960	0.945

Heating		Pipe length						
		m	2.5	5	10	15	20	25
Height difference H (m)	Indoor unit is higher than outdoor unit *1	15	—	—	—	0.972	0.945	0.919
		10	—	—	0.992	0.972	0.945	0.919
		5	—	1.000	0.992	0.972	0.945	0.919
		2.5	1.000	1.000	0.992	0.972	0.945	0.919
		0	1.000	1.000	0.992	0.972	0.945	0.919
	Indoor unit is lower than outdoor unit *2	-2.5	0.998	0.997	0.990	0.970	0.943	0.917
		-5	—	0.995	0.987	0.967	0.940	0.914
		-10	—	—	0.982	0.962	0.935	0.910
		-15	—	—	—	0.957	0.930	0.905

■ Indoor unit: 18,000 Btu/h

Cooling		Pipe length						
		m	2.5	5	10	15	20	25
Height difference H (m)	Indoor unit is higher than outdoor unit *1	15	—	—	—	0.968	0.961	0.954
		10	—	—	0.982	0.976	0.969	0.962
		5	—	0.992	0.990	0.984	0.977	0.970
		2.5	0.996	0.996	0.994	0.988	0.981	0.974
		0	1.000	1.000	0.998	0.992	0.985	0.978
	Indoor unit is lower than outdoor unit *2	-2.5	1.000	1.000	0.998	0.992	0.985	0.978
		-5	—	1.000	0.998	0.992	0.985	0.978
		-10	—	—	0.998	0.992	0.985	0.978
		-15	—	—	—	0.992	0.985	0.978

Heating		Pipe length						
		m	2.5	5	10	15	20	25
Height difference H (m)	Indoor unit is higher than outdoor unit *1	15	—	—	—	0.967	0.943	0.917
		10	—	—	0.990	0.967	0.943	0.917
		5	—	1.000	0.990	0.967	0.943	0.917
		2.5	1.000	1.000	0.990	0.967	0.943	0.917
		0	1.000	1.000	0.990	0.967	0.943	0.917
	Indoor unit is lower than outdoor unit *2	-2.5	0.998	0.997	0.988	0.965	0.941	0.915
		-5	—	0.995	0.985	0.962	0.938	0.912
		-10	—	—	0.980	0.958	0.933	0.908
		-15	—	—	—	0.953	0.929	0.903

OUTDOOR UNIT
AOEG36KBTA5

■ Indoor unit: 22,000 Btu/h

Cooling		Pipe length						
		m	2.5	5	10	15	20	25
Height difference H (m)	Indoor unit is higher than outdoor unit *1	15	—	—	—	0.978	0.969	0.953
		10	—	—	0.986	0.986	0.977	0.961
		5	—	0.992	0.994	0.994	0.984	0.968
		2.5	0.996	0.996	0.998	0.998	0.988	0.972
		0	1.000	1.000	1.002	1.002	0.992	0.976
	Indoor unit is lower than outdoor unit *2	-2.5	1.000	1.000	1.002	1.002	0.992	0.976
		-5	—	1.000	1.002	1.002	0.992	0.976
		-10	—	—	1.002	1.002	0.992	0.976
		-15	—	—	—	1.002	0.992	0.976

Heating		Pipe length						
		m	2.5	5	10	15	20	25
Height difference H (m)	Indoor unit is higher than outdoor unit *1	15	—	—	—	0.964	0.939	0.913
		10	—	—	0.988	0.964	0.939	0.913
		5	—	1.000	0.988	0.964	0.939	0.913
		2.5	1.000	1.000	0.988	0.964	0.939	0.913
		0	1.000	1.000	0.988	0.964	0.939	0.913
	Indoor unit is lower than outdoor unit *2	-2.5	0.998	0.997	0.986	0.962	0.937	0.911
		-5	—	0.995	0.983	0.959	0.934	0.909
		-10	—	—	0.978	0.954	0.929	0.904
		-15	—	—	—	0.949	0.925	0.899

■ Indoor unit: 24,000 Btu/h

Cooling		Pipe length						
		m	2.5	5	10	15	20	25
Height difference H (m)	Indoor unit is higher than outdoor unit *1	15	—	—	—	0.978	0.969	0.953
		10	—	—	0.986	0.986	0.977	0.961
		5	—	0.992	0.994	0.994	0.984	0.968
		2.5	0.996	0.996	0.998	0.998	0.988	0.972
		0	1.000	1.000	1.002	1.002	0.992	0.976
	Indoor unit is lower than outdoor unit *2	-2.5	1.000	1.000	1.002	1.002	0.992	0.976
		-5	—	1.000	1.002	1.002	0.992	0.976
		-10	—	—	1.002	1.002	0.992	0.976
		-15	—	—	—	1.002	0.992	0.976

Heating		Pipe length						
		m	2.5	5	10	15	20	25
Height difference H (m)	Indoor unit is higher than outdoor unit *1	15	—	—	—	0.964	0.939	0.913
		10	—	—	0.988	0.964	0.939	0.913
		5	—	1.000	0.988	0.964	0.939	0.913
		2.5	1.000	1.000	0.988	0.964	0.939	0.913
		0	1.000	1.000	0.988	0.964	0.939	0.913
	Indoor unit is lower than outdoor unit *2	-2.5	0.998	0.997	0.986	0.962	0.937	0.911
		-5	—	0.995	0.983	0.959	0.934	0.909
		-10	—	—	0.978	0.954	0.929	0.904
		-15	—	—	—	0.949	0.925	0.899

OUTDOOR UNIT
AOEG36KBTA5

8. Additional charge calculation

8-1. Model: AOEG36KBTA5

Refrigerant type		R32
Refrigerant amount	g	2,500

Refrigerant charge							
Total pipe length	m	40 or less	50	60	70	75 (Max.)	20 g/m
Additional charge amount	g	0	200	400	600	700	

OUTDOOR UNIT
AOEG36KBTA5

9. Airflow

9-1. Model: AOEG36KBTA5

● Cooling

m^3/h	2,450
l/s	708
CFM	1,501

● Heating

m^3/h	2,900
l/s	833
CFM	1,766

OUTDOOR UNIT
AOEG36KBTA5

10. Operation noise (sound pressure)

10-1. Noise level curve

■ Model: AOEG36KBTA5

● Cooling

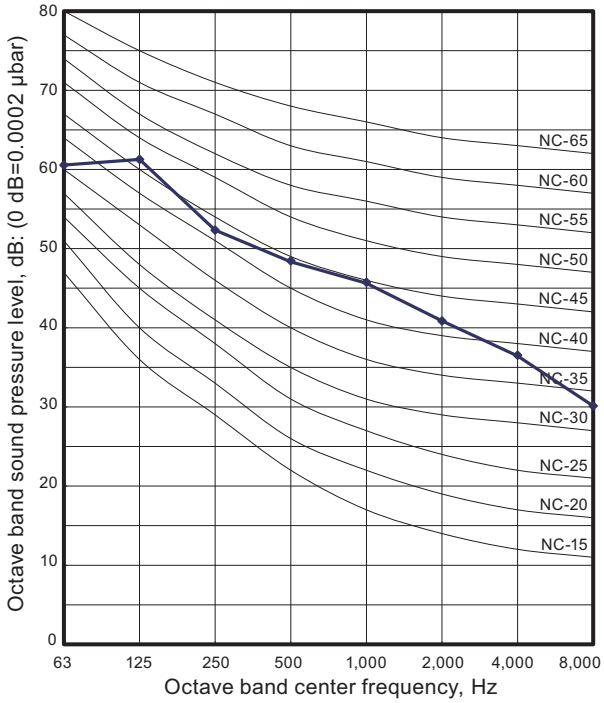

● Heating

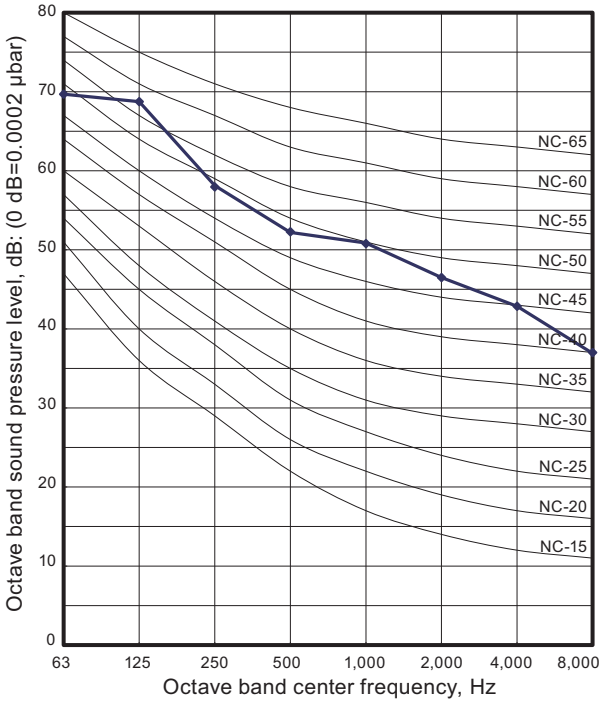

10-2. Sound level check point

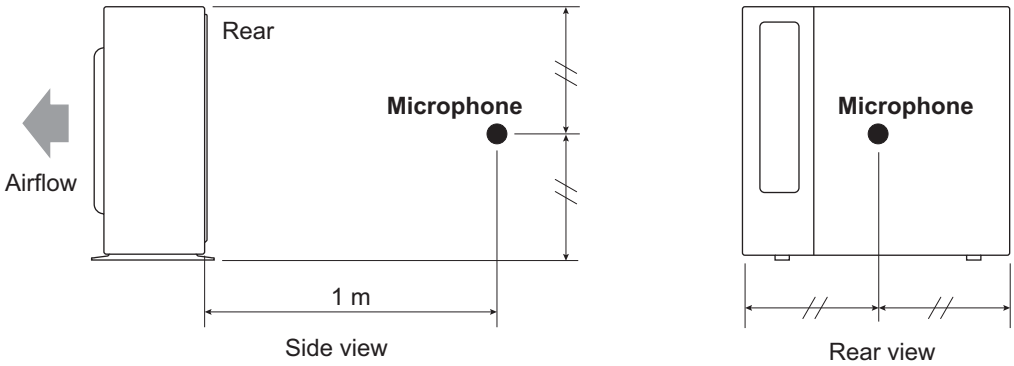

NOTE: Detailed shape of the actual outdoor unit might be slightly different from the one illustrated above.

OUTDOOR UNIT
AOEG36KBTA5

11. Electrical characteristics

Model name				AOEG36KBTA5
Power supply	Voltage		V	230 ~
	Frequency		Hz	50
Maximum operating current *1			A	20.0
Starting current			A	11.1
Wiring spec. *2	Main fuse (Circuit breaker) current		A	25
	Power cable		mm^2	2.5
	Connection cable *3	Cross-sectional area		1.5
		Limited wiring length	m	26

*1: Maximum operating current is the total current of the indoor unit and the outdoor unit.

*2: Selected sample based on Japan Electrotechnical Standards and Codes Committee E0005. As the regulations of wire size and circuit breaker differ in each country or region, select appropriate devices complied to the regional standard.

*3: This is the wiring length in case voltage descent is less than 2%. When the wiring length becomes longer, select the wiring of a more larger diameter.

OUTDOOR UNIT AOEG36KBTA5

12. Safety devices

Type of protection	Protection form		Model
			AOEG36KBTA5
Circuit protection	Current fuse (Main PCB)		250 V, 5 A 250 V, 20 A 250 V, 3.15 A
Fan motor protection	Thermal protector	Activate	125 ±10 °C Fan motor stop
		Reset	120 ±10 °C Fan motor restart
Compressor protection	Temperature thermistor (Discharge temp.)	Activate	110 °C Compressor stop
		Reset	After 7 minutes Compressor restart
	Temperature thermistor (Compressor bottom temp.)	Activate	108 °C Compressor stop
		Reset	After 3 minutes, and 80 °C or less Compressor restart
	Thermal protection program (Outdoor temp.) (Only in COOL or DRY mode)	Activate	-20 °C Compressor stop
		Reset	-15 °C Compressor restart

OUTDOOR UNIT
AOEG36KBTA5

13. Function settings

13-1. Setting methods

⚠ WARNING

Never touch electrical components such as the terminal blocks or reactor except the switch on the display board. It may cause a serious accident such as electric shock.

⚠ CAUTION

- Once refrigerant charging is completed, be sure to open the valve prior to performing the local settings. Otherwise, the compressor may fail.
- Discharge any static electricity from your body before touching the push switches. Never touch any terminal or pattern of any parts on the control board.

The positions of the switches on the outdoor unit control board are shown in the figure below.

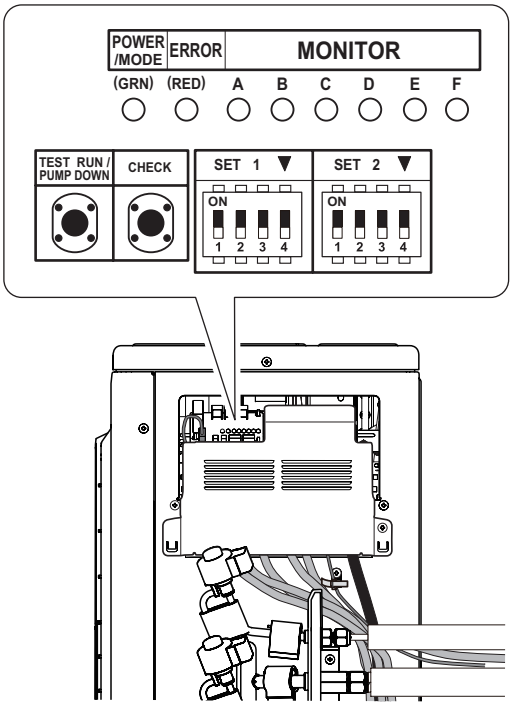

OUTDOOR UNIT AOEG36KBTA5

■ Setting method

Various settings can be adjusted by changing DIP switches and push switches on the PCB of the outdoor unit.

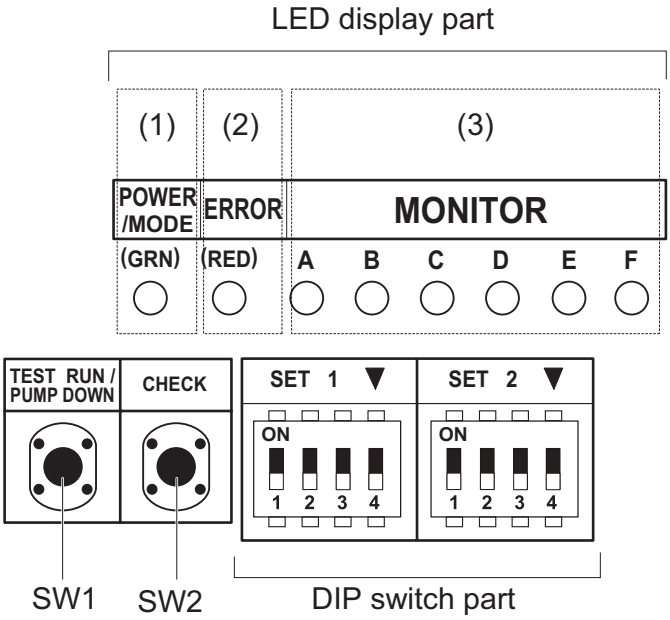

1. Be sure to disconnect the power supply or turn off the breaker.
2. Change the DIP switch setting according to the required setting.

OUTDOOR UNIT
AOEG36KBTA5

■ Description of display

LED lamp				Function or operation method
(1)	POWER/MODE		Green	• Turns on when the power supply is ON (Including when error occurs). • Indicate the MODE by the number of flashes when the installation function is active.
(2)	ERROR		Red	Flashes at high-speed when there is an error.
(3)	MONITOR	A	Orange	• Displays the location and contents of errors when there is an error. (Refer to "Error code" on page 526 for details.) • Displays when check run is activated. (Refer to "Check run" on page 519 for details.)
		B	Orange	
		C	Orange	
		D	Orange	
		E	Orange	
		F	Orange	

Switch		Function or operation method	Factory setting
SW1	Push	• For the test run start and stop. • For the pump down start and stop.	—
SW2	Push	• For when check run function is activated. • For displaying the check run. • For resetting the Automatic wiring correction memory.	—
SET1-1	DIP	For selecting cooling or heating during test operation.	OFF
SET1-2	DIP	For switching SW1 operation.	OFF
SET1-3	DIP	(Prohibited)	OFF (Do not change)
SET1-4	DIP	For outdoor unit low noise operation function.	OFF
SET2-1	DIP	For selecting outdoor unit low noise operation function.	OFF
SET2-2	DIP	(Prohibited)	OFF (Do not change)
SET2-3	DIP	Changing the current limit	OFF
SET2-4	DIP		

Be sure to disconnect the power supply or turn off the breaker before changing the DIP switch setting.

13-2. Outdoor unit low noise operation function

Change the outdoor unit low noise operation by using this setting.

⚠ CAUTION

- When the low noise operation function is working, cooling and heating capacity will decrease.
- When changing the settings, explain to the customer beforehand that the capacity decreases.

SET1-4	Setting	Factory setting
ON	Function works	
OFF	Function not working	♦

SET2-1	Setting	Factory setting
ON	Lower	
OFF	Low	♦

13-3. Current limit function

Current value can be limited to meet specific current requirements.

NOTE: When changing this setting, explain to the customer beforehand that the capacity decreases.

SET2-3	SET2-4	Current	Factory setting
OFF	OFF	Full	♦
ON	OFF	16.0 A	
OFF	ON	12.0 A	

OUTDOOR UNIT AOEG36KBTA5

14. Check and test

14-1. Check run

- The check run is a function to screen and detect any wiring errors.
- After carrying out the check run, you can use the automatic wiring correction function to correct the wiring.
- Normal operation is possible without using the check run. In this case, use the test run or forced cooling function of the indoor unit to confirm any wiring errors.

OUTDOOR UNIT
AOEG36KBTA5

■ Things to confirm before starting the check run

To ensure safety, check that the following work, inspections and operations have been completed.

	Check item	Check column
1	Check that all work on the piping connecting the outdoor unit, indoor units has been completed.	
2	Check that all work on the wiring connecting the outdoor unit, indoor units has been completed.	
3	Is there a gas leakage? (At pipe connections [flange connections and brazed areas])	
4	Is the system charged with the specified volume of refrigerant?	
5	Is a breaker installed at the power supply cable of outdoor unit?	
6	Are the wires connected to the terminals without looseness, and in accordance with the specifications?	
7	Is the 3-way valve of the outdoor unit open? (Gas pipe and liquid pipe)	
8	Is the power supply connected for more than 12 hours?	

■ Restrictions applicable when performing the check run

- When the check run starts, all indoor units connected to the outdoor unit will start to run automatically. During the check run, you cannot check the operation of the indoor units separately. After the check run, check the operation of the indoor units separately in normal operation.
- The check run can be used when the temperature is within the operable temperature of the air conditioner.
- In the check run, the air conditioner will automatically switch between cooling and heating depending on the external temperature and internal temperature.
- The check run can be completed in about 30 minutes (cooling) or about 1 hour (heating), but may take more depending on the external and internal temperature conditions etc.
- Do not conduct the check run with all the windows in the room closed.
  Otherwise the room temperature could get too low or too high.
- Depending on the difference of the room temperature of each room, a judgment may be impossible.
- Check run is a special operation so there may be a noise louder than the normal refrigerant flow sound or a creaking noise.

■ Operating procedure for check run

⚠ CAUTION

Initiate check run after more than 12 hours after the power supply is connected.

NOTE: Be sure that the indoor unit and outdoor unit are not operating before starting the check run.

1. Press the CHECK switch for 3 seconds or more.

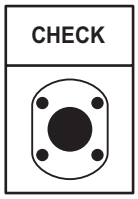

2. The number of indoor units (and the places) connected through the communication lines is displayed.
   - If the displayed number of units (places) and the installed number of units (places) is the same, proceed to step 3.
   - If the displayed number of units (places) and the installed number of units (places) is not the same, shut off the power and check whether the indoor and outdoor communication lines are properly connected.
   - If there is no operation for 1 minute, the LED will return to the original display. (POWER/MODE LED: ON)

Example: When 4 indoor units (A to D) are connected

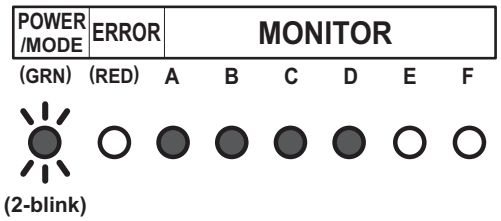

3. Press the CHECK switch for 3 seconds or more again. Check run is initiated.
   - When check run is initiated, all LEDs from A to F will flash. (Preliminary operation)
   - The LED for each indoor unit will switch off in order as check for each unit is completed.

NOTE: To interrupt the check run, press the CHECK switch.

Example: When 4 indoor units (A to D) are connected

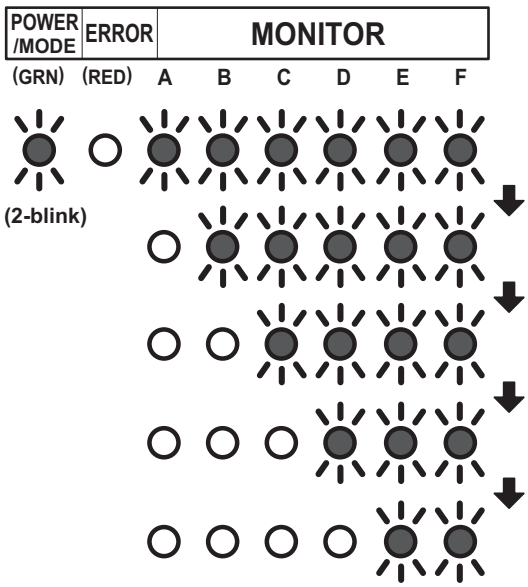

4. After the check run is completed, results will be displayed. Fill the displayed results in the result table accordingly.
   - **If the connection is correct (Example: When 4 indoor units are connected)**
     After the number of connected units are displayed, the LED for each unit will light up in order from A to D.

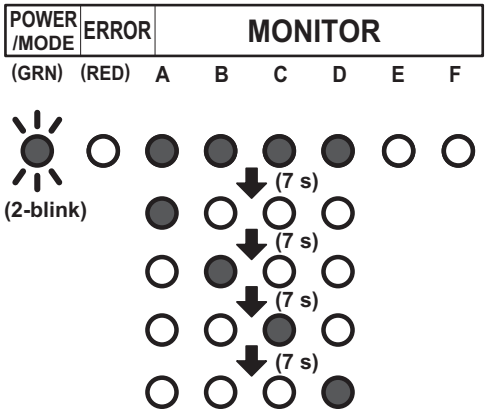

   - **If the connection is incorrect (Example: When connection of B and C of the 4 units are reversed)**
     After the number of connected units are displayed, B and C will light up in reverse.

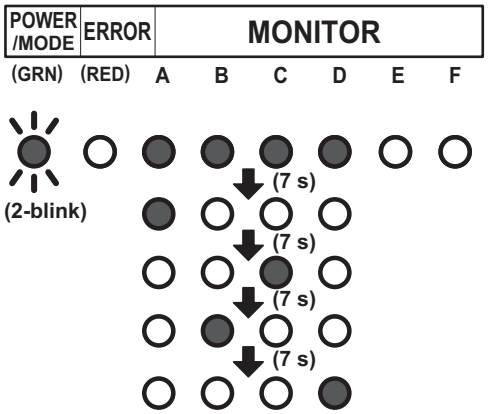

NOTES:

- Automatic wiring correction will not be completed if the power supply is disconnected while displaying the results. To confirm the automatic wiring correction, be sure to carry out step 5.
- If frost is formed on the outdoor unit while displaying the results, automatic defrost function will be operated. Proceed to step 5 after the defrost function is finished.

OUTDOOR UNIT AOEG36KBTA5

[How to record the contents]

- Fill the displayed results according to the following example.

Example: When piping A to D is connected but the wires for B and C are connected in reverse.

<Displayed results>

The LEDs will light up in 7 second intervals in the following order.

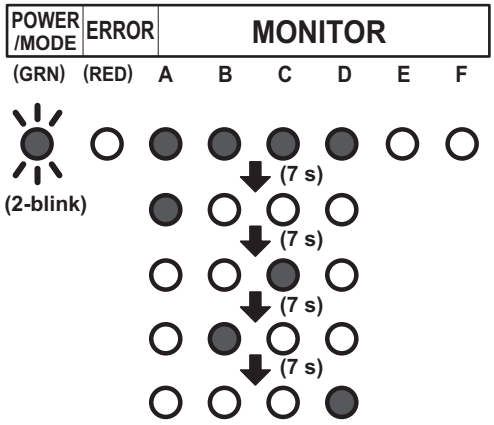

<Example of result table>

a. Write a ● where the LEDs light up in the order that they light up.

	A	B	C	D	E	F
1	●	●	●	●	○	○
2	●	○	○	○	○	○
3	○	○	●	○	○	○
4	○	●	○	○	○	○
5	○	○	○	●	○	○
6	○	○	○	○	○	○
7	○	○	○	○	○	○

b. Based on the results of step (a), record as follows.

- Trace the dotted circle with a pen if multiple places light up.

A	B	C	D	E	F
○	○	○	○	◌	◌

- Write the order from A to D in which the LEDs lit up inside the circle.

A	B	C	D	E	F
Ⓐ	Ⓒ	Ⓑ	Ⓓ	◌	◌

c. Select the correction method.

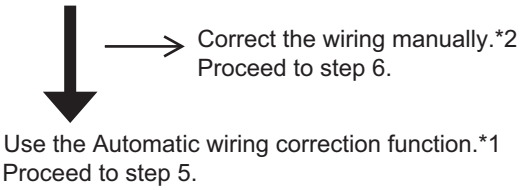

Write down the same results in the label on the reverse side of the service panel.
The results recorded are needed at the time of servicing.

<Result Table>

	A	B	C	D	E	F
1	○	○	○	○	○	○
2	○	○	○	○	○	○
3	○	○	○	○	○	○
4	○	○	○	○	○	○
5	○	○	○	○	○	○
6	○	○	○	○	○	○
7	○	○	○	○	○	○

A	B	C	D	E	F
○	○	○	○	○	○

NOTES:

- *1: By using this function, the wiring is automatically corrected according to the piping.
- *2: When correcting the wiring manually, please disconnect the power supply or turn off the breaker during results display, and then change the wiring manually according to the obtained test results.

  For example, in Example 1, the wirings connected to the terminals B and C is to be exchanged manually.

5. During results display, press the CHECK switch for 3 seconds or more.
   After LEDs A to F have lit in turn, all LEDs will light up indicating that the automatic wiring correction is completed.

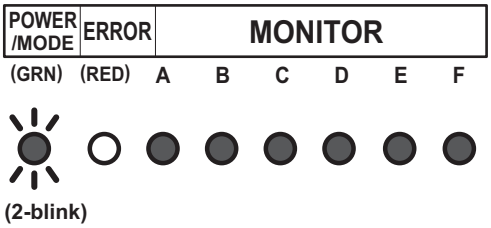

6. Disconnect the power supply or turn off the breaker and wait 10 minutes then turn the power back on and perform test run.

NOTE: If you do not disconnect the power supply or turn off the breaker, normal operation is not possible.

Notices:

- If an error occurs during check run it will be suspended. Correct the error and start check run again.
- After the check run, if automatic wiring correction is carried out, the indoor unit's position will be modified to match the piping. (Note that the display of the optional remote controller changes.)
- If you start check run again after the automatic wiring correction is finished, the modification will be reset.

■ Failure indication of check-run judgment

The check run stops when there is an error, and the LED shows the relevant error indication. When you encounter the errors described here, perform checking by using the cooling test run of the indoor unit.

- **Temperature out of range judgment**

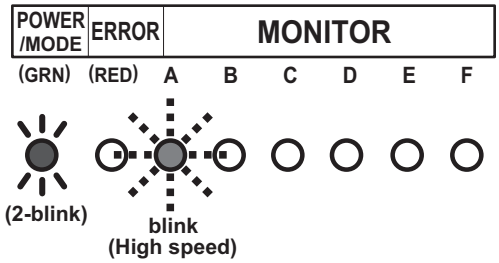

- **Wiring/piping number difference**

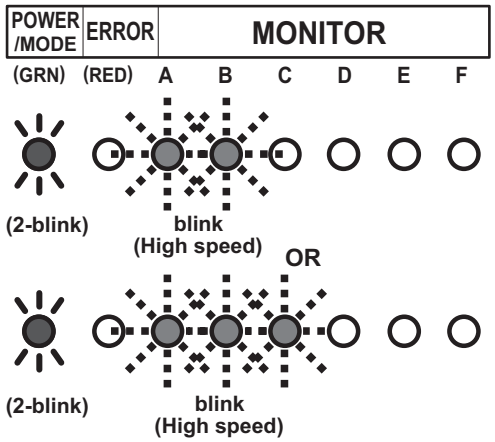

■ Redisplaying the results of check run

- When checking the content of automatic wiring correction, push the CHECK switch. The results of the check run is displayed. You can compare the result that is recorded in step (4) of Chapter 14-1-3. "Operating procedure for check run" on page 432.
- If the automatic wiring correction is not completed, the POWER/MODE LED blinks twice and the MONITOR LED turns off.

■ Memory resetting of automatic wiring correction

⚠ CAUTION

When relocating the unit, reset the memory beforehand, or the unit may not function normally.

1. Push the CHECK switch.
   The LED lights as shown in "Redisplaying the results of check run" on page 436.
2. When the LED is on, press the CHECK switch for more than 3 seconds.
3. The LEDs from A to F light in sequence, and then all LEDs light to indicate the completion of the memory resetting of automatic wiring correction.
4. Disconnect the power supply or turn off the breaker.

14-2. Test run

⚠ CAUTION

Always connect the power supply 12 hours prior to the start of the operation in order to protect the compressor.

1. Indoor unit
   a. Is the drain normal?
   b. Is there any abnormal noise and vibration during operation?

2. Outdoor unit
   a. Is there any abnormal noise and vibration during operation?
   b. Will noise, wind, or drain water from the unit disturb the neighbors?
   c. Is there any gas leakage?

   • Do not operate the air conditioner in the test running state for a long time.

OUTDOOR UNIT AOEG36KBTA5

■ Test run method

Be sure to temporarily disconnect the power supply or turn off the breaker before changing the DIP switch settings.

1. Check the 3-way valves (both at the liquid side and gas side) are opened. Confirm that the DIP switch SET1-2 is switched off.
2. Set the operation mode to COOL or HEAT. When switching the DIP switch SET1-1 between HEAT and COOL, disconnect the power supply or turn off the circuit breaker beforehand.

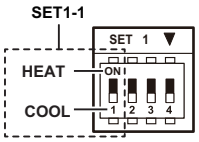

   • In the first test run, be sure to set the operation mode to COOL.
   • The operation mode cannot be switched between COOL and HEAT during the test run. To switch the operation mode between COOL and HEAT, stop the test run, switch the operation mode, and then start the test run again.

3. Push TEST RUN switch for more than 3 seconds. The POWER / MODE LED flashes once.

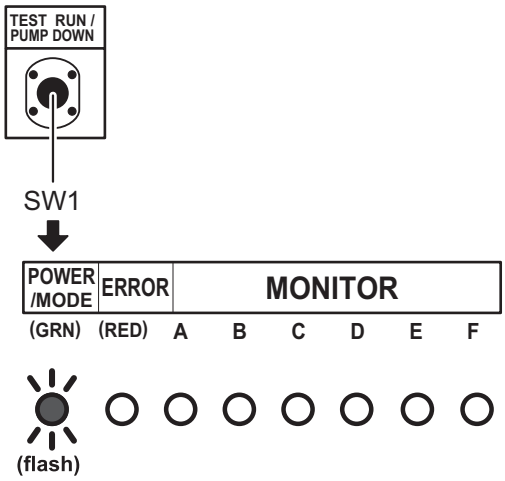

4. Confirm operating status.
5. Push TEST RUN switch for more than 3 seconds.

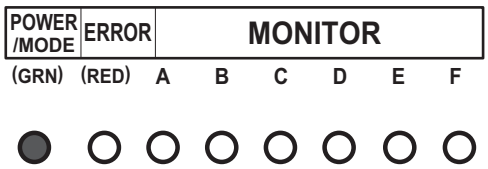

POWER/MODE LED will turn on, and test run stops.

14-3. Error code

If an error occurs, the LED lights to inform the relevant location and the code.
When error occurs, the error LED blinks at high speed.

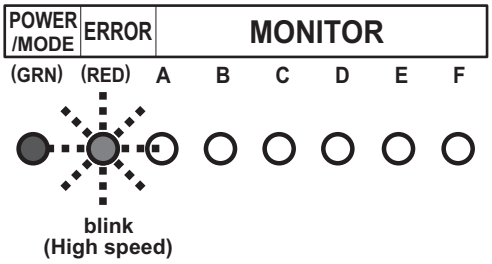

■ Error location

LEDs A to F of MONITOR light and indicate the location of the error. In the case of an overall error, LEDs A to F of MONITOR do not light.

Example: Coil error on indoor unit B

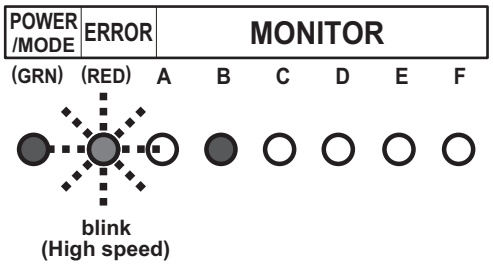

OUTDOOR UNIT
AOEG36KBTA5

■ Error code display

While the error is occurring, briefly push the SW1. The error code is displayed.

Example: Coil error (Error cord = 9A.1)

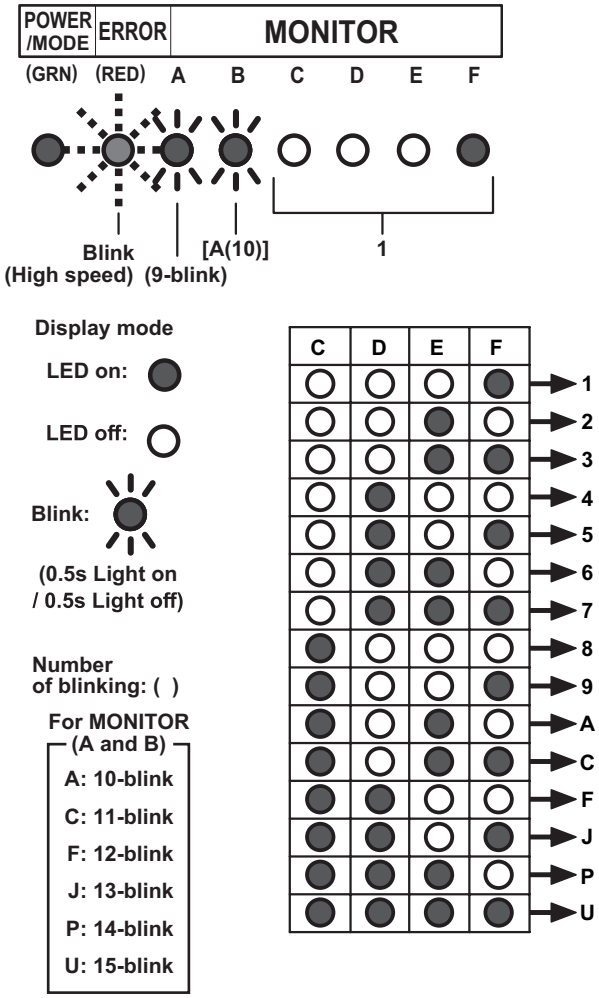

Error code	Error type
11.3	Serial communication error
11.4	Serial communication error during operation
16.5	Communication error between controller and outdoor unit
22.1	Indoor unit capacity error
23.1	Connection prohibited (Series error)
5U.1	Indoor unit error
62.1	PCB model information error
62.3	EEPROM access error
62.8	EEPROM data corruption error
63.1	Inverter error
65.3	IPM error (Trip terminal L error)
71.1	Discharge temp. sensor error
72.1	Compressor temp. sensor error
73.2	Heat exchanger middle temp. sensor error
73.3	Heat exchanger liquid temp. sensor error
74.1	Outdoor temp. sensor error
75.1	Suction gas temp. sensor error
76.1	Valve sensor error
76.2	
77.1	Heat sink temp. sensor error
84.1	Current sensor 1 error (stoppage permanently)
86.1	Discharge pressure sensor error
86.4	High pressure switch 1 error
94.1	Trip detection
95.1	Compressor motor control error (stoppage permanently)
97.3	Fan motor 1 error (Duty error)
98.3	Fan motor 2 error (Duty error)
99.1	4-way valve error
9A.1	Coil 1 (expansion valve 1) error
A1.1	Discharge temperature 1 error (stoppage permanently)
A3.1	Compressor 1 temperature error

OUTDOOR UNIT
AOEG36KBTA5

14-4. Pump down

⚠ WARNING

During the pump down operation, make sure that compressor is off before you remove the refrigerant pipe. Do not remove the connection pipe while the compressor is in operation with valve open. This may cause abnormal pressure in the refrigeration cycle that leads to breakage and even injury.

■ Pump down operation

When moving or discarding the air conditioner, in order to consider the environment and avoid the discharge of refrigerant to the atmosphere, pump down according to the following procedure.

1. Connect the pressure gauge to the charging port.

2. Change the DIP switch on the board (SET1-2) to ON.

   NOTE: Disconnect the power supply firmly on the breaker before changing the DIP switch settings.

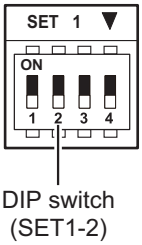

3. To start operation, push the PUMP DOWN switch (SW1) for 3 seconds or push the switch after the power has been on for 3 minutes.

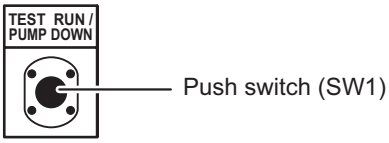

During pump down, the LED (POWER/MODE) blinks 3 times consecutively.

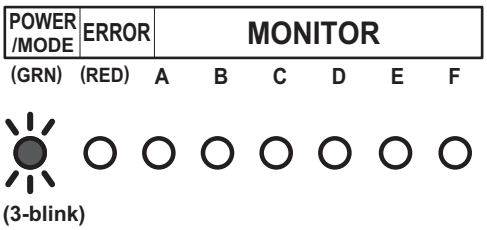

   NOTE: If the PUMP DOWN switch (SW1) is pushed while the compressor is in operation, the compressor stops and the operation restart after about 3 minutes.

4. Close the liquid pipe valve.

5. When the value between 7.3 psi and 0 psi (0.05 MPa to 0 MPa) is shown, close the gas pipe valve.

6. Stop the pump down operation by pushing the PUMP DOWN switch (SW1) for 3 seconds. The LED light as follows.

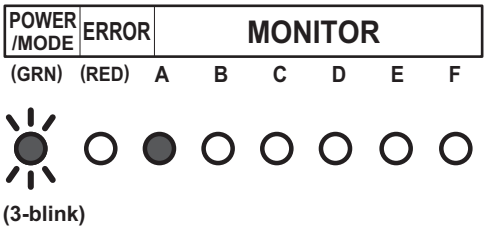

OUTDOOR UNIT AOEG36KBTA5

7. Disconnect the power supply or turn off the breaker.

NOTE:
- Even if the pump down operation is not stopped by pushing the switch as in step 6, the operation stops automatically after 15 minutes, and the LED light as follows.

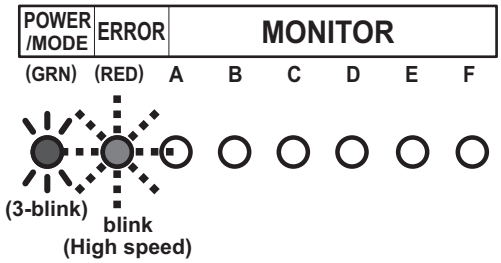

- After completing the pump down operation, disconnect the power supply or turn off the breaker.
- If the pump down operation still continues, open the liquid pipe valve. Then perform the procedure again starting from step 3.

- To cancel the pump down operation, push the PUMP DOWN switch (SW1) again. The indication of the LED returns to the original state which is before starting the pump down operation.
  (POWER/MODE LED: On)
- The pump down may stop before completion due to an error. To complete the pump down operation, correct the error, open the liquid pipe valve and then start from step 1 again. Otherwise, the refrigerant can be recovered from the service port.

OUTDOOR UNIT AOEG36KBTA5

15. Accessories

15-1. Model: AOEG36KBTA5

Part name	Exterior	Qty	Part name	Exterior	Qty
Installation manual		1	Adapter K: mm (in) 12.70 (1/2) to 9.52 (3/8)	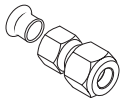	2
Drain pipe		1	Adapter H: mm (in) 9.52 (3/8) to 12.70 (1/2)	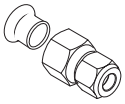	1
Cable tie (small)		1			

OUTDOOR UNIT
AOEG36KBTA5

16. Optional parts

Exterior	Part name	Model name	Summary
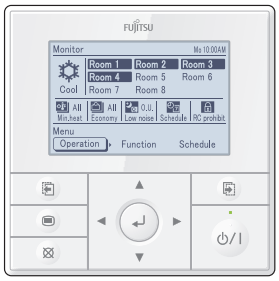	Central Remote Controller		Set temperatures on timers to best meet individuals' needs. Includes a large backlit LCD and 4-way navigation pad. Remote controller cable: 0.33 mm² (22AWG) **NOTES:** • The remote controller cable supplied with this controller is for indoor use. If the cable for outdoor use is required, purchase an appropriate cable locally. Material is not specified. However, it should be selected considering the installing environment (temperature, humidity), and regional regulations (RoHS Directive, etc.). • The cable from the central remote controller should be connected to connector (P400) of the outdoor unit.

OUTDOOR UNIT AOEG36KBTA5

17. Outdoor unit installation precautions

NOTE: The information listed below are general precautions.
Some models also include items that do not apply.

17-1. Places where prohibited for use

- Places where there is a danger of combustible gas leakage.
- Places where sulfur gas, chlorine gas, acid, alkali, or other matter which effects equipment is generated.
- Places affected by heat radiation from other heat sources.
- Places where the air is stagnant.
- Places where machinery which generates high frequencies is used.
- Ocean beaches and other areas where there is a lot of salt.
- Inside of vehicles, ships, and other conveyances.
- Places where voltage fluctuations are large such as a factory.

OUTDOOR UNIT AOEG36KBTA5

17-2. Points to remember when installing

- The product shall be installed at a place which can withstand the weight and vibration of the outdoor unit.
- To allow maintenance after refrigerant piping, drain piping, and the connection/installation of electric wiring, provide an maintenance space.
  Maintenance space is shown in "Installation space" on page 449.
- Be careful when installing the set at the following places.

Condition	Contents	Countermeasures (Reference)
When installed near adjacent houses.	Perform installation work so that operating sound does not disturb the neighbors.	1. Install a soundproof barrier. 2. Change the installation site.
When there is the possibility of strong wind.	• If the outdoor unit is exposed to strong wind, capacity may drop, frost may form during heating, and operation may be stopped by high pressure rise. In addition, when a very strong wind blows, the fan may be damaged. • When a very strong wind blows, there is the possibility of the outdoor unit being toppled over if held only by foundation bolts.	1. Install the outdoor unit with keeping a sufficient distance between the outlet side of the unit and a facing wall or fence. 2. Make the outlet direction and wind direction perpendicular. 3. Fasten the outdoor unit using toppling prevention hardware (purchased locally).
When snow accumulates.	If the outdoor unit is covered by accumulated snow, it may not be able to operate.	1. Make the foundation as high as possible. 2. Perform snow prevention work.
When installing the inverter type.	It may generate noise in TV sets, stereos and PCs.	The inverter type should be installed at a sufficient distance from these equipments.