CONFIDENTIAL

MULTI V™ 5
AIR CONDITIONER
SERVICE MANUAL
(Exploded View)

MODEL : ARUM***LTE5

CAUTION

Before Servicing the unit, read the safety precautions in General SVC manual.
Only for authorized service personnel.

ARUM***LTE5

1. Specifications (For Europe) 3
2. Specifications (For Australia) 16
3. Specifications (For Latin America).....32
4. Functions 37
5. Dimensions.....38
6. Piping Diagrams.....44
7. Wiring Diagrams.....66
8. Exploded View 73

1. Specifications (For Europe)

50Hz/60Hz

HP			8	10	12
Model Name	Combination Unit		ARUM080LTE5	ARUM100LTE5	ARUM120LTE5
	Independent Unit		ARUM080LTE5	ARUM100LTE5	ARUM120LTE5
Capacity	Cooling (Rated)	kW	22.4	28.0	33.6
		Btu/h	76,400	95,500	114,600
	Heating (Rated)	kW	22.4	28.0	33.6
		Btu/h	76,400	95,500	114,600
	Heating (Max)	kW	25.2	31.5	37.8
		Btu/h	86,000	107,500	129,000
Input	Cooling (Rated)	kW	7.02	9.30	12.00
	Heating (Rated)	kW	5.63	6.45	8.00
EER			3.19	3.01	2.80
COP	Rated capacity		3.98	4.34	4.20
SEER			7.90	7.80	7.71
SCOP			4.36	4.39	4.84
Exterior	Color		Morning Gray / Dawn Gray	Morning Gray / Dawn Gray	Morning Gray / Dawn Gray
	RAL code		RAL 7030 / RAL 7037	RAL 7030 / RAL 7037	RAL 7030 / RAL 7037
Heat Exchanger			Wide Louver Plus	Wide Louver Plus	Wide Louver Plus
Compressor	Type		Hermetically Sealed Scroll	Hermetically Sealed Scroll	Hermetically Sealed Scroll
	Piston Displacement	cm^3/rev	43.8	62.1	62.1
	Number of Revolution	rev/min	3,600	3,600	3,600
	Motor Output × Number	W × No.	4,200 × 1	5,300 × 1	5,300 × 1
	Starting Method		Inverter	Inverter	Inverter
	Oil Type		FW68D(PVE)	FW68D(PVE)	FW68D(PVE)
Fan	Type		Propeller fan	Propeller fan	Propeller fan
	Motor Output × Number	W	1,200 × 1	1,200 × 1	1,200 × 1
	Air Flow Rate(High)	m^3/min	240 × 1	240 × 1	240 × 1
		ft^3/min	8,476 × 1	8,476 × 1	8,476 × 1
	Drive		DC INVERTER	DC INVERTER	DC INVERTER
	External Static Pressure (Max, Pa)		80	80	80
	Discharge	Side / Top	TOP	TOP	TOP
Pipe Connections #1	Liquid Pipe	mm(inch)	9.52(3/8)	9.52(3/8)	12.7(1/2)
	Low Pressure Gas Pipe	mm(inch)	19.05(3/4)	22.2(7/8)	28.58(1-1/8)
	High Pressure Gas Pipe	mm(inch)	15.88(5/8)	19.05(3/4)	19.05(3/4)
Pipe Connections #2	Liquid Pipe	mm(inch)	9.52(3/8)	9.52(3/8)	12.7(1/2)
	Gas Pipe	mm(inch)	19.05(3/4)	22.2(7/8)	28.58(1-1/8)
Dimensions(W × H × D)		mm	(930 × 1,690 × 760) × 1	(930 × 1,690 × 760) × 1	(930 × 1,690 × 760) × 1
		inch	(36-5/8 × 66-17/32 × 29-29/32) × 1	(36-5/8 × 66-17/32 × 29-29/32) × 1	(36-5/8 × 66-17/32 × 29-29/32) × 1
Net Weight		kg	198 × 1	215 × 1	215 × 1
		lbs	437 × 1	474 × 1	474 × 1
Sound Pressure Level	Cooling	dB(A)	58.0	58.0	59.0
	Heating	dB(A)	59.0	59.0	60.0
Sound Power Level	Cooling	dB(A)	79.0	80.0	81.0
	Heating	dB(A)	79.0	80.0	83.0
Protection Devices	High pressure protection	-	High pressure sensor / High pressure switch	High pressure sensor / High pressure switch	High pressure sensor / High pressure switch
	Compressor/Fan	-	Over-heat protection / Fan driver overload protector	Over-heat protection / Fan driver overload protector	Over-heat protection / Fan driver overload protector
	Inverter	-	Over-heat protection / Over-current protection	Over-heat protection / Over-current protection	Over-heat protection / Over-current protection
Communication Cable		No.×mm^2(VCTF-SB)	2C × 1.0 ~ 1.5	2C × 1.0 ~ 1.5	2C × 1.0 ~ 1.5
Refigerant	Refrigerant name		R410A	R410A	R410A
	Precharged Amount in factory	kg	7.5	9.5	9.5
		lbs	16.5	20.9	20.9
	TCO_2eq		15.656	19.831	19.831
	Control		Electronic Expansion Valve	Electronic Expansion Valve	Electronic Expansion Valve
Power Supply		Ø , V, Hz	380-400-415, 3, 50/60	380-400-415, 3, 50/60	380-400-415, 3, 50/60
Running Current	Cooling (Rated)	A	11.47 - 10.90 - 10.50	15.19 - 14.43 - 13.91	19.62 - 18.64 - 17.97
	Heating (Rated)	A	9.02 - 8.74 - 8.42	10.54 - 10.01 - 9.65	13.07 - 12.42 - 11.97
Number of maximum connectable indoor units ***			13(20)	16(25)	20(30)

Notes:

1. Capacities are based on the following conditions:
   Cooling: - Indoor Temperature 27°C(80.6°F) DB/19°C(66.2°F) WB
   - Outdoor Temperature 35°C(95°F) DB/24°C(75.2°F) WB
   Heating: - Indoor Temperature 20°C(68°F) DB/15°C(59°F) WB
   - Outdoor Temperature 7°C(44.6°F) DB/6°C(42.8°F) WB
   Piping Length: - Interconnecting Piping Length 7.5m
   - Level Difference of Zero
2. Capacities are net capacity
3. EEV : Electronic Expansion Valve
4. Wiring cable size must comply with the applicable local and national code.
5. Due to our policy of innovation some specifications may be changed without prior notification

Conversion Formula
RT = kW x 0.284
kcal/h = kW x 860
Btu/h = kW x 3412
cfm = m^3/min x 35.3

HP			14	16	18
Model Name	Combination Unit		ARUM140LTE5	ARUM160LTE5	ARUM180LTE5
	Independent Unit		ARUM140LTE5	ARUM160LTE5	ARUM180LTE5
Capacity	Cooling (Rated)	kW	39.2	44.8	50.4
		Btu/h	133,800	152,900	172,000
	Heating (Rated)	kW	39.2	44.8	50.4
		Btu/h	133,800	152,900	172,000
	Heating (Max)	kW	44.1	50.4	56.7
		Btu/h	150,500	172,000	193,500
Input	Cooling (Rated)	kW	12.98	17.23	14.82
	Heating (Rated)	kW	8.85	10.59	10.91
EER			3.02	2.60	3.40
COP	Rated capacity		4.43	4.23	4.62
SEER			8.22	7.74	8.50
SCOP			4.97	5.30	4.67
Exterior	Color		Morning Gray / Dawn Gray	Morning Gray / Dawn Gray	Morning Gray / Dawn Gray
	RAL code		RAL 7030 / RAL 7037	RAL 7030 / RAL 7037	RAL 7030 / RAL 7037
Heat Exchanger			Wide Louver Plus	Wide Louver Plus	Wide Louver Plus
Compressor	Type		Hermetically Sealed Scroll	Hermetically Sealed Scroll	Hermetically Sealed Scroll
	Piston Displacement	cm^3/rev	62.1	62.1	(62.1 × 1) + (43.8 × 1)
	Number of Revolution	rev/min	3,600	3,600	3,600 × 2
	Motor Output × Number	W × No.	5,300 × 1	5,300 × 1	(5,300 × 1) + (4,200 × 1)
	Starting Method		Inverter	Inverter	Inverter
	Oil Type		FW68D(PVE)	FW68D(PVE)	FW68D(PVE)
Fan	Type		Propeller fan	Propeller fan	Propeller fan
	Motor Output × Number	W	900 × 2	900 × 2	900 × 2
	Air Flow Rate(High)	m^3/min	320 × 1	320 × 1	320 × 1
		ft^3/min	1,1301 × 1	1,1301 × 1	1,1301 × 1
	Drive		DC INVERTER	DC INVERTER	DC INVERTER
	External Static Pressure (Max, Pa)		80	80	80
	Discharge	Side / Top	TOP	TOP	TOP
Pipe Connections #1	Liquid Pipe	mm(inch)	12.7(1/2)	12.7(1/2)	15.88(5/8)
	Low Pressure Gas Pipe	mm(inch)	28.58(1-1/8)	28.58(1-1/8)	28.58(1-1/8)
	High Pressure Gas Pipe	mm(inch)	22.2(7/8)	22.2(7/8)	22.2(7/8)
Pipe Connections #2	Liquid Pipe	mm(inch)	12.7(1/2)	12.7(1/2)	15.88(5/8)
	Gas Pipe	mm(inch)	28.58(1-1/8)	28.58(1-1/8)	28.58(1-1/8)
Dimensions(W × H × D)		mm	(1,240 × 1,690 × 760) × 1	(1,240 × 1,690 × 760) × 1	(1,240 × 1,690 × 760) × 1
		inch	(48-13/16 x 66-17/32 x 29-29/32) x 1	(48-13/16 x 66-17/32 x 29-29/32) x 1	(48-13/16 x 66-17/32 x 29-29/32) x 1
Net Weight		kg	237 × 1	237 × 1	300 × 1
		lbs	522 × 1	522 × 1	661 × 1
Sound Pressure Level	Cooling	dB(A)	60.0	60.5	61.0
	Heating	dB(A)	61.0	61.5	62.0
Sound Power Level	Cooling	dB(A)	82.0	86.0	87.0
	Heating	dB(A)	82.0	86.0	87.0
Protection Devices	High pressure protection	-	High pressure sensor / High pressure switch	High pressure sensor / High pressure switch	High pressure sensor / High pressure switch
	Compressor/Fan	-	Over-heat protection / Fan driver overload protector	Over-heat protection / Fan driver overload protector	Over-heat protection / Fan driver overload protector
	Inverter	-	Over-heat protection / Over-current protection	Over-heat protection / Over-current protection	Over-heat protection / Over-current protection
Communication Cable		No.×mm^2(VCTF-SB)	2C × 1.0 ~ 1.5	2C × 1.0 ~ 1.5	2C × 1.0 ~ 1.5
Refigerant	Refrigerant name		R410A	R410A	R410A
	Precharged Amount in factory	kg	13.5	13.5	16.0
		lbs	29.8	29.8	35.3
	TCO_2eq		28.181	28.181	33.400
	Control		Electronic Expansion Valve	Electronic Expansion Valve	Electronic Expansion Valve
Power Supply		Ø , V, Hz	380-400-415, 3, 50/60	380-400-415, 3, 50/60	380-400-415, 3, 50/60
Running Current	Cooling (Rated)	A	21.21 - 20.15 - 19.42	27.85 - 26.54 - 25.58	24.21 - 23.00 - 22.17
	Heating (Rated)	A	14.46 - 13.74 - 13.24	17.30 - 16.44 - 15.84	17.82 - 16.93 - 16.32
Number of maximum connectable indoor units ***			23(35)	26(40)	29(45)

Notes:

1. Capacities are based on the following conditions:
   Cooling: - Indoor Temperature 27°C(80.6°F) DB/19°C(66.2°F) WB
   - Outdoor Temperature 35°C(95°F) DB/24°C(75.2°F) WB
   Heating: - Indoor Temperature 20°C(68°F) DB/15°C(59°F) WB
   - Outdoor Temperature 7°C(44.6°F) DB/6°C(42.8°F) WB
   Piping Length: - Interconnecting Piping Length 7.5m
   - Level Difference of Zero
2. Capacities are net capacity
3. EEV : Electronic Expansion Valve
4. Wiring cable size must comply with the applicable local and national code.
5. Due to our policy of innovation some specifications may be changed without prior notification

Conversion Formula
RT = kW x 0.284
kcal/h = kW x 860
Btu/h = kW x 3412
cfm = m^3/min x 35.3

Specifications (For Europe)

HP			20	22	24
Model Name	Combination Unit		ARUM200LTE5	ARUM221LTE5	ARUM241LTE5
	Independent Unit		ARUM200LTE5	ARUM120LTE5	ARUM120LTE5
				ARUM100LTE5	ARUM120LTE5
Capacity	Cooling (Rated)	kW	56.0	61.6	67.2
		Btu/h	191,100	210,200	229,300
	Heating (Rated)	kW	56.0	61.6	67.2
		Btu/h	191,100	210,200	229,300
	Heating (Max)	kW	63.0	69.3	75.6
		Btu/h	215,000	236,500	258,000
Input	Cooling (Rated)	kW	18.06	21.30	24.00
	Heating (Rated)	kW	13.02	14.45	16.00
EER			3.10	2.89	2.80
COP	Rated capacity		4.30	4.26	4.20
SEER			8.17	7.76	7.71
SCOP			4.98	4.61	4.84
Exterior	Color		Morning Gray / Dawn Gray	Morning Gray / Dawn Gray	Morning Gray / Dawn Gray
	RAL code		RAL 7030 / RAL 7037	RAL 7030 / RAL 7037	RAL 7030 / RAL 7037
Heat Exchanger			Wide Louver Plus	Wide Louver Plus	Wide Louver Plus
Compressor	Type		Hermetically Sealed Scroll	Hermetically Sealed Scroll	Hermetically Sealed Scroll
	Piston Displacement	cm^3/rev	(62.1 × 1) + (43.8 × 1)	62.1 × 2	62.1 × 2
	Number of Revolution	rev/min	3,600 × 2	3,600 × 2	3,600 × 2
	Motor Output × Number	W × No.	(5,300 × 1) + (4,200 × 1)	5,300 × 2	5,300 × 2
	Starting Method		Inverter	Inverter	Inverter
	Oil Type		FW68D(PVE)	FW68D(PVE)	FW68D(PVE)
Fan	Type		Propeller fan	Propeller fan	Propeller fan
	Motor Output × Number	W	900 × 2	(1200 × 1) + (1,200 × 1)	(1200 × 1) + (1,200 × 1)
	Air Flow Rate(High)	m^3/min	320 × 1	(240 × 1) + (240 × 1)	(240 × 1) + (240 × 1)
		ft^3/min	1,1301 × 1	(8,476 × 1) + (8,476 × 1)	(8,476 × 1) + (8,476 × 1)
	Drive		DC INVERTER	DC INVERTER	DC INVERTER
	External Static Pressure (Max, Pa)		80	80	80
	Discharge	Side / Top	TOP	TOP	TOP
Pipe Connections #1	Liquid Pipe	mm(inch)	15.88(5/8)	15.88(5/8)	15.88(5/8)
	Low Pressure Gas Pipe	mm(inch)	28.58(1-1/8)	28.58(1-1/8)	34.9(1-3/8)
	High Pressure Gas Pipe	mm(inch)	22.2(7/8)	28.58(1-1/8)	28.58(1-1/8)
Pipe Connections #2	Liquid Pipe	mm(inch)	15.88(5/8)	15.88(5/8)	15.88(5/8)
	Gas Pipe	mm(inch)	28.58(1-1/8)	28.58(1-1/8)	34.9(1-3/8)
Dimensions(W × H × D)		mm	(1,240 × 1,690 × 760) × 1	((930 × 1,690 × 760) × 1) + ((930 × 1,690 × 760) × 1)	((930 × 1,690 × 760) × 1) + ((930 × 1,690 × 760) × 1)
		inch	(48-13/16 × 66-17/32 × 29-29/32) × 1	((36-5/8 × 66-17/32 × 29-29/32) × 1) + ((36-5/8 × 66-17/32 × 29-29/32) × 1)	((36-5/8 × 66-17/32 × 29-29/32) × 1) + ((36-5/8 × 66-17/32 × 29-29/32) × 1)
Net Weight		kg	300 × 1	(215 × 1) + (215 × 1)	(215 × 1) + (215 × 1)
		lbs	661 × 1	(474 × 1) + (474 × 1)	(474 × 1) + (474 × 1)
Sound Pressure Level	Cooling	dB(A)	62.0	61.5	62.0
	Heating	dB(A)	64.5	63.0	63.0
Sound Power Level	Cooling	dB(A)	87.0	84.0	84.0
	Heating	dB(A)	90.0	85.0	86.0
Protection Devices	High pressure protection	-	High pressure sensor / High pressure switch	High pressure sensor / High pressure switch	High pressure sensor / High pressure switch
	Compressor/Fan	-	Over-heat protection / Fan driver overload protector	Over-heat protection / Fan driver overload protector	Over-heat protection / Fan driver overload protector
	Inverter	-	Over-heat protection / Over-current protection	Over-heat protection / Over-current protection	Over-heat protection / Over-current protection
Communication Cable		No.xmm^2(VCTF-SB)	2C × 1.0 ~ 1.5	2C × 1.0 ~ 1.5	2C × 1.0 ~ 1.5
Refigerant	Refrigerant name		R410A	R410A	R410A
	Precharged Amount in factory	kg	16.0	19.0	19.0
		lbs	35.3	41.8	41.8
	TCO_2eq		33.400	39.663	39.663
	Control		Electronic Expansion Valve	Electronic Expansion Valve	Electronic Expansion Valve
Power Supply		Ø , V, Hz	380-400-415, 3, 50/60	380-400-415, 3, 50/60	380-400-415, 3, 50/60
Running Current	Cooling (Rated)	A	29.50 - 28.03 - 27.02	34.81 - 33.07 - 31.88	39.24 - 37.28 - 35.93
	Heating (Rated)	A	21.27 - 20.21 - 19.48	23.61 - 22.43 - 21.62	26.14 - 24.83 - 23.93
Number of maximum connectable indoor units ***			32(50)	35(44)	39(48)

Notes:

1. Capacities are based on the following conditions:
   Cooling: - Indoor Temperature 27°C(80.6°F) DB/19°C(66.2°F) WB
   - Outdoor Temperature 35°C(95°F) DB/24°C(75.2°F) WB
   Heating: - Indoor Temperature 20°C(68°F) DB/15°C(59°F) WB
   - Outdoor Temperature 7°C(44.6°F) DB/6°C(42.8°F) WB
   Piping Length: - Interconnecting Piping Length 7.5m
   - Level Difference of Zero
2. Capacities are net capacity
3. EEV : Electronic Expansion Valve
4. Wiring cable size must comply with the applicable local and national code.
5. Due to our policy of innovation some specifications may be changed without prior notification

Conversion Formula
RT = kW x 0.284
kcal/h = kW x 860
Btu/h = kW x 3412
cfm = m^3/min x 35.3

HP			26	28	30
Model Name	Combination Unit		ARUM261LTE5	ARUM280LTE5	ARUM300LTE5
	Independent Unit		ARUM140LTE5	ARUM160LTE5	ARUM180LTE5
			ARUM120LTE5	ARUM120LTE5	ARUM120LTE5
Capacity	Cooling (Rated)	kW	72.8	78.4	84.0
		Btu/h	248,400	267,500	286,600
	Heating (Rated)	kW	72.8	78.4	84.0
		Btu/h	248,400	267,500	286,600
	Heating (Max)	kW	81.9	88.2	94.5
		Btu/h	279,500	301,000	322,500
Input	Cooling (Rated)	kW	24.98	29.23	26.82
	Heating (Rated)	kW	16.85	18.59	18.91
EER			2.91	2.68	3.13
COP	Rated capacity		4.32	4.22	4.44
SEER			7.97	7.72	8.16
SCOP			4.91	5.08	4.73
Exterior	Color		Morning Gray / Dawn Gray	Morning Gray / Dawn Gray	Morning Gray / Dawn Gray
	RAL code		RAL 7030 / RAL 7037	RAL 7030 / RAL 7037	RAL 7030 / RAL 7037
Heat Exchanger			Wide Louver Plus	Wide Louver Plus	Wide Louver Plus
Compressor	Type		Hermetically Sealed Scroll	Hermetically Sealed Scroll	Hermetically Sealed Scroll
	Piston Displacement	cm^3/rev	62.1 × 2	62.1 × 2	(62.1 × 2) + (43.8 × 1)
	Number of Revolution	rev/min	3,600 × 2	3,600 × 2	3,600 × 3
	Motor Output × Number	W × No.	5,300 × 2	5,300 × 2	(5,300 × 2) + (4,200 × 1)
	Starting Method		Inverter	Inverter	Inverter
	Oil Type		FW68D(PVE)	FW68D(PVE)	FW68D(PVE)
Fan	Type		Propeller fan	Propeller fan	Propeller fan
	Motor Output × Number	W	(900 × 2) + (1,200 × 1)	(900 × 2) + (1,200 × 1)	(900 × 2) + (1,200 × 1)
	Air Flow Rate(High)	m^3/min	(320 × 1) + (240 × 1)	(320 × 1) + (240 × 1)	(320 × 1) + (240 × 1)
		ft^3/min	(11,301 × 1) + (8,476 × 1)	(11,301 × 1) + (8,476 × 1)	(11,301 × 1) + (8,476 × 1)
	Drive		DC INVERTER	DC INVERTER	DC INVERTER
	External Static Pressure (Max, Pa)		80	80	80
	Discharge	Side / Top	TOP	TOP	TOP
Pipe Connections #1	Liquid Pipe	mm(inch)	19.05(3/4)	19.05(3/4)	19.05(3/4)
	Low Pressure Gas Pipe	mm(inch)	34.9(1-3/8)	34.9(1-3/8)	34.9(1-3/8)
	High Pressure Gas Pipe	mm(inch)	28.58(1-1/8)	28.58(1-1/8)	28.58(1-1/8)
Pipe Connections #2	Liquid Pipe	mm(inch)	19.05(3/4)	19.05(3/4)	19.05(3/4)
	Gas Pipe	mm(inch)	34.9(1-3/8)	34.9(1-3/8)	34.9(1-3/8)
Dimensions(W × H × D)		mm	((1,240 × 1,690 × 760) × 1) + ((930 × 1,690 × 760) × 1)	((1,240 × 1,690 × 760) × 1) + ((930 × 1,690 × 760) × 1)	((1,240 × 1,690 × 760) × 1) + ((930 × 1,690 × 760) × 1)
		inch	((48-13/16 x 66-17/32 x 29-29/32) x 1) + ((36-5/8 x 66-17/32 x 29-29/32) x 1)	((48-13/16 x 66-17/32 x 29-29/32) x 1) + ((36-5/8 x 66-17/32 x 29-29/32) x 1)	((48-13/16 x 66-17/32 x 29-29/32) x 1) + ((36-5/8 x 66-17/32 x 29-29/32) x 1)
Net Weight		kg	(237 × 1) + (215 × 1)	(237 × 1) + (215 × 1)	(300 × 1) + (215 × 1)
		lbs	(522 × 1) + (474 × 1)	(522 × 1) + (474 × 1)	(661 × 1) + (474 × 1)
Sound Pressure Level	Cooling	dB(A)	63.0	63.0	63.0
	Heating	dB(A)	64.0	64.0	64.0
Sound Power Level	Cooling	dB(A)	85.0	87.0	88.0
	Heating	dB(A)	86.0	88.0	88.0
Protection Devices	High pressure protection	-	High pressure sensor / High pressure switch	High pressure sensor / High pressure switch	High pressure sensor / High pressure switch
	Compressor/Fan	-	Over-heat protection / Fan driver overload protector	Over-heat protection / Fan driver overload protector	Over-heat protection / Fan driver overload protector
	Inverter	-	Over-heat protection / Over-current protection	Over-heat protection / Over-current protection	Over-heat protection / Over-current protection
Communication Cable		No.×mm^2(VCTF-SB)	2C × 1.0 ~ 1.5	2C × 1.0 ~ 1.5	2C × 1.0 ~ 1.5
Refigerant	Refrigerant name		R410A	R410A	R410A
	Precharged Amount in factory	kg	23.0	23.0	25.5
		lbs	50.7	50.7	56.2
	TCO_2eq		48.013	48.013	53.231
	Control		Electronic Expansion Valve	Electronic Expansion Valve	Electronic Expansion Valve
Power Supply		Ø , V, Hz	380-400-415, 3, 50/60	380-400-415, 3, 50/60	380-400-415, 3, 50/60
Running Current	Cooling (Rated)	A	40.83 - 38.78 - 37.38	47.47 - 45.18 - 43.55	43.83 - 41.64 - 40.14
	Heating (Rated)	A	27.53 - 26.15 - 25.21	30.37 - 28.85 - 27.81	30.89 - 29.35 - 28.29
Number of maximum connectable indoor units ***			42(52)	45(56)	49(60)

Notes:

1. Capacities are based on the following conditions:
   Cooling: - Indoor Temperature 27°C(80.6°F) DB/19°C(66.2°F) WB
   - Outdoor Temperature 35°C(95°F) DB/24°C(75.2°F) WB
   Heating: - Indoor Temperature 20°C(68°F) DB/15°C(59°F) WB
   - Outdoor Temperature 7°C(44.6°F) DB/6°C(42.8°F) WB
   Piping Length: - Interconnecting Piping Length 7.5m
   - Level Difference of Zero
2. Capacities are net capacity
3. EEV : Electronic Expansion Valve
4. Wiring cable size must comply with the applicable local and national code.
5. Due to our policy of innovation some specifications may be changed without prior notification

Conversion Formula
RT = kW x 0.284
kcal/h = kW x 860
Btu/h = kW x 3412
cfm = m^3/min x 35.3

Specifications (For Europe)

HP			32	34	36
Model Name	Combination Unit		ARUM320LTE5	ARUM340LTE5	ARUM360LTE5
	Independent Unit		ARUM200LTE5	ARUM200LTE5	ARUM200LTE5
			ARUM120LTE5	ARUM140LTE5	ARUM160LTE5
Capacity	Cooling (Rated)	kW	89.6	95.2	100.8
		Btu/h	305,700	324,800	343,900
	Heating (Rated)	kW	89.6	95.2	100.8
		Btu/h	305,700	324,800	343,900
	Heating (Max)	kW	100.8	107.1	113.4
		Btu/h	344,000	365,500	387,000
Input	Cooling (Rated)	kW	30.06	31.04	35.29
	Heating (Rated)	kW	21.02	21.87	23.61
EER			2.98	3.07	2.86
COP	Rated capacity		4.26	4.35	4.27
SEER			7.98	8.19	7.97
SCOP			4.93	4.98	5.11
Exterior	Color		Morning Gray / Dawn Gray	Morning Gray / Dawn Gray	Morning Gray / Dawn Gray
	RAL code		RAL 7030 / RAL 7037	RAL 7030 / RAL 7037	RAL 7030 / RAL 7037
Heat Exchanger			Wide Louver Plus	Wide Louver Plus	Wide Louver Plus
Compressor	Type		Hermetically Sealed Scroll	Hermetically Sealed Scroll	Hermetically Sealed Scroll
	Piston Displacement	cm^3/rev	(62.1 × 2) + (43.8 × 1)	(62.1 × 2) + (43.8 × 1)	(62.1 × 2) + (43.8 × 1)
	Number of Revolution	rev/min	3,600 × 3	3,600 × 3	3,600 × 3
	Motor Output × Number	W × No.	(5,300 × 2) + (4,200 × 1)	(5,300 × 2) + (4,200 × 1)	(5,300 × 2) + (4,200 × 1)
	Starting Method		Inverter	Inverter	Inverter
	Oil Type		FW68D(PVE)	FW68D(PVE)	FW68D(PVE)
Fan	Type		Propeller fan	Propeller fan	Propeller fan
	Motor Output × Number	W	(900 × 2) + (1,200 × 1)	900 × 4	900 × 4
	Air Flow Rate(High)	m^3/min	(320 × 1) + (240 × 1)	320 × 2	320 × 2
		ft^3/min	(11,301 × 1) + (8,476 × 1)	11,301 × 2	11,301 × 2
	Drive		DC INVERTER	DC INVERTER	DC INVERTER
	External Static Pressure (Max, Pa)		80	80	80
	Discharge	Side / Top	TOP	TOP	TOP
Pipe Connections #1	Liquid Pipe	mm(inch)	19.05(3/4)	19.05(3/4)	19.05(3/4)
	Low Pressure Gas Pipe	mm(inch)	34.9(1-3/8)	34.9(1-3/8)	41.3(1-5/8)
	High Pressure Gas Pipe	mm(inch)	28.58(1-1/8)	28.58(1-1/8)	28.58(1-1/8)
Pipe Connections #2	Liquid Pipe	mm(inch)	19.05(3/4)	19.05(3/4)	19.05(3/4)
	Gas Pipe	mm(inch)	34.9(1-3/8)	34.9(1-3/8)	41.3(1-5/8)
Dimensions(W × H × D)		mm	((1,240 × 1,690 × 760) × 1) + ((930 × 1,690 × 760) × 1)	((1,240 × 1,690 × 760) × 1) + ((1,240 × 1,690 × 760) × 1)	((1,240 × 1,690 × 760) × 1) + ((1,240 × 1,690 × 760) × 1)
		inch	((48-13/16 x 66-17/32 x 29-29/32) x 1) + ((36-5/8 x 66-17/32 x 29-29/32) x 1)	((48-13/16 x 66-17/32 x 29-29/32) x 1) + ((48-13/16 x 66-17/32 x 29-29/32) x 1)	((48-13/16 x 66-17/32 x 29-29/32) x 1) + ((48-13/16 x 66-17/32 x 29-29/32) x 1)
Net Weight		kg	(300 × 1) + (215 × 1)	(300 × 1) + (237 × 1)	(300 × 1) + (237 × 1)
		lbs	(661 × 1) + (474 × 1)	(661 × 1) + (522 × 1)	(661 × 1) + (522 × 1)
Sound Pressure Level	Cooling	dB(A)	64.0	64.0	64.0
	Heating	dB(A)	66.0	64.0	66.0
Sound Power Level	Cooling	dB(A)	88.0	88.0	90.0
	Heating	dB(A)	91.0	91.0	91.0
Protection Devices	High pressure protection	-	High pressure sensor / High pressure switch	High pressure sensor / High pressure switch	High pressure sensor / High pressure switch
	Compressor/Fan	-	Over-heat protection / Fan driver overload protector	Over-heat protection / Fan driver overload protector	Over-heat protection / Fan driver overload protector
	Inverter	-	Over-heat protection / Over-current protection	Over-heat protection / Over-current protection	Over-heat protection / Over-current protection
Communication Cable		No.×mm^2(VCTF-SB)	2C × 1.0 ~ 1.5	2C × 1.0 ~ 1.5	2C × 1.0 ~ 1.5
Refigerant	Refrigerant name		R410A	R410A	R410A
	Precharged Amount in factory	kg	25.5	29.5	29.5
		lbs	56.2	65.1	65.1
	TCO_2eq		53.231	61.581	61.581
	Control		Electronic Expansion Valve	Electronic Expansion Valve	Electronic Expansion Valve
Power Supply		Ø , V, Hz	380-400-415, 3, 50/60	380-400-415, 3, 50/60	380-400-415, 3, 50/60
Running Current	Cooling (Rated)	A	49.13 - 46.67 - 44.98	50.71 - 48.17 - 46.43	57.35 - 54.57 - 52.6
	Heating (Rated)	A	34.34 - 32.62 - 31.44	35.73 - 33.94 - 32.72	38.57 - 36.64 - 35.32
Number of maximum connectable indoor units ***			52(64)	55(64)	58(64)

Notes:

1. Capacities are based on the following conditions:
   Cooling: - Indoor Temperature 27°C(80.6°F) DB/19°C(66.2°F) WB
   - Outdoor Temperature 35°C(95°F) DB/24°C(75.2°F) WB
   Heating: - Indoor Temperature 20°C(68°F) DB/15°C(59°F) WB
   - Outdoor Temperature 7°C(44.6°F) DB/6°C(42.8°F) WB
   Piping Length: - Interconnecting Piping Length 7.5m
   - Level Difference of Zero
2. Capacities are net capacity
3. EEV : Electronic Expansion Valve
4. Wiring cable size must comply with the applicable local and national code.
5. Due to our policy of innovation some specifications may be changed without prior notification

Conversion Formula
RT = kW x 0.284
kcal/h = kW x 860
Btu/h = kW x 3412
cfm = m^3/min x 35.3

HP			38	40	42
Model Name	Combination Unit		ARUM380LTE5	ARUM400LTE5	ARUM420LTE5
	Independent Unit		ARUM200LTE5	ARUM200LTE5	ARUM180LTE5
			ARUM180LTE5	ARUM200LTE5	ARUM120LTE5
					ARUM120LTE5
Capacity	Cooling (Rated)	kW	106.4	112.0	117.6
		Btu/h	363,000	382,100	401,300
	Heating (Rated)	kW	106.4	112.0	117.6
		Btu/h	363,000	382,100	401,300
	Heating (Max)	kW	119.7	126.0	132.3
		Btu/h	408,500	430,000	451,500
Input	Cooling (Rated)	kW	32.88	36.12	38.82
	Heating (Rated)	kW	23.93	26.04	26.91
EER			3.24	3.10	3.03
COP	Rated capacity		4.45	4.30	4.37
SEER			8.32	8.17	8.02
SCOP			4.83	4.98	4.76
Exterior	Color		Morning Gray / Dawn Gray	Morning Gray / Dawn Gray	Morning Gray / Dawn Gray
	RAL code		RAL 7030 / RAL 7037	RAL 7030 / RAL 7037	RAL 7030 / RAL 7037
Heat Exchanger			Wide Louver Plus	Wide Louver Plus	Wide Louver Plus
Compressor	Type		Hermetically Sealed Scroll	Hermetically Sealed Scroll	Hermetically Sealed Scroll
	Piston Displacement	cm^3/rev	(62.1 × 2) + (43.8 × 2)	(62.1 × 2) + (43.8 × 2)	(62.1 × 3) + (43.8 × 1)
	Number of Revolution	rev/min	3,600 × 4	3,600 × 4	3,600 × 4
	Motor Output × Number	W × No.	(5,300 × 2) + (4,200 × 2)	(5,300 × 2) + (4,200 × 2)	(5,300 × 3) + (4,200 × 1)
	Starting Method		Inverter	Inverter	Inverter
	Oil Type		FW68D(PVE)	FW68D(PVE)	FW68D(PVE)
Fan	Type		Propeller fan	Propeller fan	Propeller fan
	Motor Output × Number	W	900 × 4	900 × 4	(900 × 2) + (1,200 × 2)
	Air Flow Rate(High)	m^3/min	320 × 2	320 × 2	(320 × 1) + (240 × 2)
		ft^3/min	11,301 × 2	11,301 × 2	(11,301 × 1) + (8,476 × 2)
	Drive		DC INVERTER	DC INVERTER	DC INVERTER
	External Static Pressure (Max, Pa)		80	80	80
	Discharge	Side / Top	TOP	TOP	TOP
Pipe Connections #1	Liquid Pipe	mm(inch)	19.05(3/4)	19.05(3/4)	19.05(3/4)
	Low Pressure Gas Pipe	mm(inch)	41.3(1-5/8)	41.3(1-5/8)	41.3(1-5/8)
	High Pressure Gas Pipe	mm(inch)	34.9(1-3/8)	34.9(1-3/8)	34.9(1-3/8)
Pipe Connections #2	Liquid Pipe	mm(inch)	19.05(3/4)	19.05(3/4)	19.05(3/4)
	Gas Pipe	mm(inch)	41.3(1-5/8)	41.3(1-5/8)	41.3(1-5/8)
Dimensions(W × H × D)		mm	((1,240 × 1,690 × 760) × 1) + ((1,240 × 1,690 × 760) × 1)	((1,240 × 1,690 × 760) × 1) + ((1,240 × 1,690 × 760) × 1)	((1,240 × 1,690 × 760) × 1) + ((930 × 1,690 × 760) × 1) + ((930 × 1,690 × 760) × 1)
		inch	((48-13/16 x 66-17/32 x 29-29/32) x 1) + ((48-13/16 x 66-17/32 x 29-29/32) x 1)	((48-13/16 x 66-17/32 x 29-29/32) x 1) + ((48-13/16 x 66-17/32 x 29-29/32) x 1)	((48-13/16 x 66-17/32 x 29-29/32) x 1) + ((36-5/8 x 66-17/32 x 29-29/32) x 1) + ((36-5/8 x 66-17/32 x 29-29/32) x 1)
Net Weight		kg	(300 × 1) + (300 × 1)	(300 × 1) + (300 × 1)	(300 × 1) + (215 × 1) + (215 × 1)
		lbs	(661 × 1) + (661 × 1)	(661 × 1) + (661 × 1)	(661 × 1) + (474 × 1) + (474 × 1)
Sound Pressure Level	Cooling	dB(A)	65.0	65.0	65.0
	Heating	dB(A)	66.0	68.0	66.0
Sound Power Level	Cooling	dB(A)	90.0	90.0	89.0
	Heating	dB(A)	92.0	93.0	90.0
Protection Devices	High pressure protection	-	High pressure sensor / High pressure switch	High pressure sensor / High pressure switch	High pressure sensor / High pressure switch
	Compressor/Fan	-	Over-heat protection / Fan driver overload protector	Over-heat protection / Fan driver overload protector	Over-heat protection / Fan driver overload protector
	Inverter	-	Over-heat protection / Over-current protection	Over-heat protection / Over-current protection	Over-heat protection / Over-current protection
Communication Cable		No.×mm^2(VCTF-SB)	2C × 1.0 ~ 1.5	2C × 1.0 ~ 1.5	2C × 1.0 ~ 1.5
Refigerant	Refrigerant name		R410A	R410A	R410A
	Precharged Amount in factory	kg	32.0	32.0	35.0
		lbs	70.6	70.6	77.1
	TCO_2eq		66.800	66.800	73.063
	Control		Electronic Expansion Valve	Electronic Expansion Valve	Electronic Expansion Valve
Power Supply		Ø , V, Hz	380-400-415, 3, 50/60	380-400-415, 3, 50/60	380-400-415, 3, 50/60
Running Current	Cooling (Rated)	A	53.72 - 51.03 - 49.19	59.01 - 56.06 - 54.03	63.45 - 60.28 - 58.10
	Heating (Rated)	A	39.09 - 37.14 - 35.8	42.54 - 40.41 - 38.95	43.96 - 41.76 - 40.26
Number of maximum connectable indoor units ***			61(64)	64	64

Notes:

1. Capacities are based on the following conditions:
   Cooling: - Indoor Temperature 27°C(80.6°F) DB/19°C(66.2°F) WB
   - Outdoor Temperature 35°C(95°F) DB/24°C(75.2°F) WB
   Heating: - Indoor Temperature 20°C(68°F) DB/15°C(59°F) WB
   - Outdoor Temperature 7°C(44.6°F) DB/6°C(42.8°F) WB
   Piping Length: - Interconnecting Piping Length 7.5m
   - Level Difference of Zero
2. Capacities are net capacity
3. EEV : Electronic Expansion Valve
4. Wiring cable size must comply with the applicable local and national code.
5. Due to our policy of innovation some specifications may be changed without prior notification

Conversion Formula
RT = kW x 0.284
kcal/h = kW x 860
Btu/h = kW x 3412
cfm = m^3/min x 35.3

Specifications (For Europe)

HP			44	46	48
Model Name	Combination Unit		ARUM440LTE5	ARUM460LTE5	ARUM480LTE5
	Independent Unit		ARUM200LTE5	ARUM200LTE5	ARUM200LTE5
			ARUM120LTE5	ARUM140LTE5	ARUM160LTE5
			ARUM120LTE5	ARUM120LTE5	ARUM120LTE5
Capacity	Cooling (Rated)	kW	123.2	128.8	134.4
		Btu/h	420,400	439,500	458,600
	Heating (Rated)	kW	123.2	128.8	134.4
		Btu/h	420,400	439,500	458,600
	Heating (Max)	kW	138.6	144.9	151.2
		Btu/h	473,000	494,500	516,000
Input	Cooling (Rated)	kW	42.06	43.04	47.29
	Heating (Rated)	kW	29.02	29.87	31.61
EER			2.93	2.99	2.84
COP	Rated capacity		4.25	4.31	4.25
SEER			7.90	7.58	7.38
SCOP			4.90	4.94	5.04
Exterior	Color		Morning Gray / Dawn Gray	Morning Gray / Dawn Gray	Morning Gray / Dawn Gray
	RAL code		RAL 7030 / RAL 7037	RAL 7030 / RAL 7037	RAL 7030 / RAL 7037
Heat Exchanger			Wide Louver Plus	Wide Louver Plus	Wide Louver Plus
Compressor	Type		Hermetically Sealed Scroll	Hermetically Sealed Scroll	Hermetically Sealed Scroll
	Piston Displacement	cm^3/rev	(62.1 × 3) + (43.8 × 1)	(62.1 × 3) + (43.8 × 1)	(62.1 × 3) + (43.8 × 1)
	Number of Revolution	rev/min	3,600 × 4	3,600 × 4	3,600 × 4
	Motor Output × Number	W × No.	(5,300 × 3) + (4,200 × 1)	(5,300 × 3) + (4,200 × 1)	(5,300 × 3) + (4,200 × 1)
	Starting Method		Inverter	Inverter	Inverter
	Oil Type		FW68D(PVE)	FW68D(PVE)	FW68D(PVE)
Fan	Type		Propeller fan	Propeller fan	Propeller fan
	Motor Output × Number	W	(900 × 2) + (1,200 × 2)	(900 × 4) + (1,200 × 1)	(900 × 4) + (1,200 × 1)
	Air Flow Rate(High)	m^3/min	(320 × 1) + (240 × 2)	(320 × 2) + (240 × 1)	(320 × 2) + (240 × 1)
		ft^3/min	(11,301 × 1) + (8,476 × 2)	(11,301 × 2) + (8,476 × 1)	(11,301 × 2) + (8,476 × 1)
	Drive		DC INVERTER	DC INVERTER	DC INVERTER
	External Static Pressure (Max, Pa)		80	80	80
	Discharge	Side / Top	TOP	TOP	TOP
Pipe Connections #1	Liquid Pipe	mm(inch)	19.05(3/4)	19.05(3/4)	19.05(3/4)
	Low Pressure Gas Pipe	mm(inch)	41.3(1-5/8)	41.3(1-5/8)	41.3(1-5/8)
	High Pressure Gas Pipe	mm(inch)	34.9(1-3/8)	34.9(1-3/8)	34.9(1-3/8)
Pipe Connections #2	Liquid Pipe	mm(inch)	19.05(3/4)	19.05(3/4)	19.05(3/4)
	Gas Pipe	mm(inch)	41.3(1-5/8)	41.3(1-5/8)	41.3(1-5/8)
Dimensions(W × H × D)		mm	((1,240 x 1,690 x 760) x 1) + ((930 x 1,690 x 760) x 1) + ((930 x 1,690 x 760) x 1)	((1,240 x 1,690 x 760) x 1) + ((1,240 x 1,690 x 760) x 1) + ((930 x 1,690 x 760) x 1)	((1,240 x 1,690 x 760) x 1) + ((1,240 x 1,690 x 760) x 1) + ((930 x 1,690 x 760) x 1)
		inch	((48-13/16 x 66-17/32 x 29-29/32) x 1) + ((36-5/8 x 66-17/32 x 29-29/32) x 1) + ((36-5/8 x 66-17/32 x 29-29/32) x 1)	((48-13/16 x 66-17/32 x 29-29/32) x 1) + ((48-13/16 x 66-17/32 x 29-29/32) x 1) + ((36-5/8 x 66-17/32 x 29-29/32) x 1)	((48-13/16 x 66-17/32 x 29-29/32) x 1) + ((48-13/16 x 66-17/32 x 29-29/32) x 1) + ((36-5/8 x 66-17/32 x 29-29/32) x 1)
Net Weight		kg	(300 × 1) + (215 × 1) + (215 × 1)	(300 × 1) + (237 × 1) + (215 × 1)	(300 × 1) + (237 × 1) + (215 × 1)
		lbs	(661 × 1) + (474 × 1) + (474 × 1)	(661 × 1) + (522 × 1) + (474 × 1)	(661 × 1) + (522 × 1) + (474 × 1)
Sound Pressure Level	Cooling	dB(A)	65.0	65.0	65.0
	Heating	dB(A)	67.0	67.0	67.0
Sound Power Level	Cooling	dB(A)	89.0	89.0	90.0
	Heating	dB(A)	91.0	91.0	92.0
Protection Devices	High pressure protection	-	High pressure sensor / High pressure switch	High pressure sensor / High pressure switch	High pressure sensor / High pressure switch
	Compressor/Fan	-	Over-heat protection / Fan driver overload protector	Over-heat protection / Fan driver overload protector	Over-heat protection / Fan driver overload protector
	Inverter	-	Over-heat protection / Over-current protection	Over-heat protection / Over-current protection	Over-heat protection / Over-current protection
Communication Cable		No.xmm^2(VCTF-SB)	2C × 1.0 ~ 1.5	2C × 1.0 ~ 1.5	2C × 1.0 ~ 1.5
Refigerant	Refrigerant name		R410A	R410A	R410A
	Precharged Amount in factory	kg	35.0	39.0	39.0
		lbs	77.1	86.0	86.0
	TCO_2eq		73.063	81.413	81.413
	Control		Electronic Expansion Valve	Electronic Expansion Valve	Electronic Expansion Valve
Power Supply		Ø , V, Hz	380-400-415, 3, 50/60	380-400-415, 3, 50/60	380-400-415, 3, 50/60
Running Current	Cooling (Rated)	A	68.75 - 65.31 - 62.95	70.33 - 66.81 - 64.40	76.97 - 73.21 - 70.57
	Heating (Rated)	A	47.41 - 45.04 - 43.41	48.8 - 46.36 - 44.68	51.64 - 49.06 - 47.29
Number of maximum connectable indoor units ***			64	64	64

Notes:

1. Capacities are based on the following conditions:
   Cooling: - Indoor Temperature 27°C(80.6°F) DB/19°C(66.2°F) WB
   - Outdoor Temperature 35°C(95°F) DB/24°C(75.2°F) WB
   Heating: - Indoor Temperature 20°C(68°F) DB/15°C(59°F) WB
   - Outdoor Temperature 7°C(44.6°F) DB/6°C(42.8°F) WB
   Piping Length: - Interconnecting Piping Length 7.5m
   - Level Difference of Zero
2. Capacities are net capacity
3. EEV : Electronic Expansion Valve
4. Wiring cable size must comply with the applicable local and national code.
5. Due to our policy of innovation some specifications may be changed without prior notification

Conversion Formula
RT = kW x 0.284
kcal/h = kW x 860
Btu/h = kW x 3412
cfm = m^3/min x 35.3

HP			50	52	54
Model Name	Combination Unit		ARUM500LTE5	ARUM520LTE5	ARUM540LTE5
	Independent Unit		ARUM200LTE5	ARUM200LTE5	ARUM200LTE5
			ARUM180LTE5	ARUM200LTE5	ARUM200LTE5
			ARUM120LTE5	ARUM120LTE5	ARUM140LTE5
Capacity	Cooling (Rated)	kW	140.0	145.6	151.2
		Btu/h	477,700	496,800	515,900
	Heating (Rated)	kW	140.0	145.6	151.2
		Btu/h	477,700	496,800	515,900
	Heating (Max)	kW	157.5	163.8	170.1
		Btu/h	537,500	559,000	580,500
Input	Cooling (Rated)	kW	44.88	48.12	49.10
	Heating (Rated)	kW	31.93	34.04	34.89
EER			3.12	3.03	3.08
COP	Rated capacity		4.39	4.28	4.33
SEER			8.16	8.05	7.79
SCOP			4.83	4.95	4.98
Exterior	Color		Morning Gray / Dawn Gray	Morning Gray / Dawn Gray	Morning Gray / Dawn Gray
	RAL code		RAL 7030 / RAL 7037	RAL 7030 / RAL 7037	RAL 7030 / RAL 7037
Heat Exchanger			Wide Louver Plus	Wide Louver Plus	Wide Louver Plus
Compressor	Type		Hermetically Sealed Scroll	Hermetically Sealed Scroll	Hermetically Sealed Scroll
	Piston Displacement	cm^3/rev	(62.1 × 3) + (43.8 × 2)	(62.1 × 3) + (43.8 × 2)	(62.1 × 3) + (43.8 × 2)
	Number of Revolution	rev/min	3,600 × 5	3,600 × 5	3,600 × 5
	Motor Output × Number	W × No.	(5,300 × 3) + (4,200 × 2)	(5,300 × 3) + (4,200 × 2)	(5,300 × 3) + (4,200 × 2)
	Starting Method		Inverter	Inverter	Inverter
	Oil Type		FW68D(PVE)	FW68D(PVE)	FW68D(PVE)
Fan	Type		Propeller fan	Propeller fan	Propeller fan
	Motor Output × Number	W	(900 × 4) + (1,200 × 1)	(900 × 4) + (1,200 × 1)	900 × 6
	Air Flow Rate(High)	m^3/min	(320 × 2) + (240 × 1)	(320 × 2) + (240 × 1)	320 × 3
		ft^3/min	(11,301 × 2) + (8,476 × 1)	(11,301 × 2) + (8,476 × 1)	11,301 × 3
	Drive		DC INVERTER	DC INVERTER	DC INVERTER
	External Static Pressure (Max, Pa)		80	80	80
	Discharge	Side / Top	TOP	TOP	TOP
Pipe Connections #1	Liquid Pipe	mm(inch)	19.05(3/4)	19.05(3/4)	19.05(3/4)
	Low Pressure Gas Pipe	mm(inch)	41.3(1-5/8)	41.3(1-5/8)	41.3(1-5/8)
	High Pressure Gas Pipe	mm(inch)	34.9(1-3/8)	34.9(1-3/8)	34.9(1-3/8)
Pipe Connections #2	Liquid Pipe	mm(inch)	19.05(3/4)	19.05(3/4)	19.05(3/4)
	Gas Pipe	mm(inch)	41.3(1-5/8)	41.3(1-5/8)	41.3(1-5/8)
Dimensions(W × H × D)		mm	((1,240 × 1,690 × 760) × 1) + ((1,240 × 1,690 × 760) × 1) + ((930 × 1,690 × 760) × 1)	((1,240 × 1,690 × 760) × 1) + ((1,240 × 1,690 × 760) × 1) + ((930 × 1,690 × 760) × 1)	((1,240 × 1,690 × 760) × 1) + ((1,240 × 1,690 × 760) × 1) + ((1,240 × 1,690 × 760) × 1)
		inch	((48-13/16 x 66-17/32 x 29-29/32) x 1) + ((48-13/16 x 66-17/32 x 29-29/32) x 1) + ((36-5/8 x 66-17/32 x 29-29/32) x 1)	((48-13/16 x 66-17/32 x 29-29/32) x 1) + ((48-13/16 x 66-17/32 x 29-29/32) x 1) + ((36-5/8 x 66-17/32 x 29-29/32) x 1)	((48-13/16 x 66-17/32 x 29-29/32) x 1) + ((48-13/16 x 66-17/32 x 29-29/32) x 1) + ((48-13/16 x 66-17/32 x 29-29/32) x 1)
Net Weight		kg	(300 × 1) + (300 × 1) + (215 × 1)	(300 × 1) + (300 × 1) + (215 × 1)	(300 × 1) + (300 × 1) + (237 × 1)
		lbs	(661 × 1) + (661 × 1) + (474 × 1)	(661 × 1) + (661 × 1) + (474 × 1)	(661 × 1) + (661 × 1) + (522 × 1)
Sound Pressure Level	Cooling	dB(A)	66.0	66.0	66.0
	Heating	dB(A)	67.0	68.0	67.0
Sound Power Level	Cooling	dB(A)	91.0	91.0	91.0
	Heating	dB(A)	92.0	93.0	93.0
Protection Devices	High pressure protection	-	High pressure sensor / High pressure switch	High pressure sensor / High pressure switch	High pressure sensor / High pressure switch
	Compressor/Fan	-	Over-heat protection / Fan driver overload protector	Over-heat protection / Fan driver overload protector	Over-heat protection / Fan driver overload protector
	Inverter	-	Over-heat protection / Over-current protection	Over-heat protection / Over-current protection	Over-heat protection / Over-current protection
Communication Cable		No.×mm^2(VCTF-SB)	2C × 1.0 ~ 1.5	2C × 1.0 ~ 1.5	2C × 1.0 ~ 1.5
Refigerant	Refrigerant name		R410A	R410A	R410A
	Precharged Amount in factory	kg	41.5	41.5	45.5
		lbs	91.5	91.5	100.4
	TCO_2eq		86.631	86.631	94.981
	Control		Electronic Expansion Valve	Electronic Expansion Valve	Electronic Expansion Valve
Power Supply		Ø , V, Hz	380-400-415, 3, 50/60	380-400-415, 3, 50/60	380-400-415, 3, 50/60
Running Current	Cooling (Rated)	A	73.34 - 69.67 - 67.15	78.63 - 74.70 - 72.00	80.21 - 76.20 - 73.45
	Heating (Rated)	A	52.16 - 49.56 - 47.76	55.61 - 52.83 - 50.92	57 - 54.15 - 52.19
Number of maximum connectable indoor units ***			64	64	64

Notes:

1. Capacities are based on the following conditions:
   Cooling: - Indoor Temperature 27°C(80.6°F) DB/19°C(66.2°F) WB
   - Outdoor Temperature 35°C(95°F) DB/24°C(75.2°F) WB
   Heating: - Indoor Temperature 20°C(68°F) DB/15°C(59°F) WB
   - Outdoor Temperature 7°C(44.6°F) DB/6°C(42.8°F) WB
   Piping Length: - Interconnecting Piping Length 7.5m
   - Level Difference of Zero
2. Capacities are net capacity
3. EEV : Electronic Expansion Valve
4. Wiring cable size must comply with the applicable local and national code.
5. Due to our policy of innovation some specifications may be changed without prior notification

Conversion Formula
RT = kW x 0.284
kcal/h = kW x 860
Btu/h = kW x 3412
cfm = m^3/min x 35.3

Specifications (For Europe)

HP			56	58	60
Model Name	Combination Unit		ARUM560LTE5	ARUM580LTE5	ARUM600LTE5
	Independent Unit		ARUM200LTE5	ARUM200LTE5	ARUM200LTE5
			ARUM200LTE5	ARUM200LTE5	ARUM200LTE5
			ARUM160LTE5	ARUM180LTE5	ARUM200LTE5
Capacity	Cooling (Rated)	kW	156.8	162.4	168.0
		Btu/h	535,000	554,100	573,200
	Heating (Rated)	kW	156.8	162.4	168.0
		Btu/h	535,000	554,100	573,200
	Heating (Max)	kW	176.4	182.7	189.0
		Btu/h	602,000	623,500	645,000
Input	Cooling (Rated)	kW	53.35	50.94	54.18
	Heating (Rated)	kW	36.63	36.95	39.06
EER			2.94	3.19	3.10
COP	Rated capacity		4.28	4.40	4.30
SEER			7.67	8.27	8.17
SCOP			5.06	4.88	4.98
Exterior	Color		Morning Gray / Dawn Gray	Morning Gray / Dawn Gray	Morning Gray / Dawn Gray
	RAL code		RAL 7030 / RAL 7037	RAL 7030 / RAL 7037	RAL 7030 / RAL 7037
Heat Exchanger			Wide Louver Plus	Wide Louver Plus	Wide Louver Plus
Compressor	Type		Hermetically Sealed Scroll	Hermetically Sealed Scroll	Hermetically Sealed Scroll
	Piston Displacement	cm^3/rev	(62.1 × 3) + (43.8 × 2)	(62.1 × 3) + (43.8 × 3)	(62.1 × 3) + (43.8 × 3)
	Number of Revolution	rev/min	3,600 × 5	3,600 × 6	3,600 × 6
	Motor Output × Number	W × No.	(5,300 × 3) + (4,200 × 2)	(5,300 × 3) + (4,200 × 3)	(5,300 × 3) + (4,200 × 3)
	Starting Method		Inverter	Inverter	Inverter
	Oil Type		FW68D(PVE)	FW68D(PVE)	FW68D(PVE)
Fan	Type		Propeller fan	Propeller fan	Propeller fan
	Motor Output × Number	W	900 × 6	900 × 6	900 × 6
	Air Flow Rate(High)	m^3/min	320 × 3	320 × 3	320 × 3
		ft^3/min	11,301 × 3	11,301 × 3	11,301 × 3
	Drive		DC INVERTER	DC INVERTER	DC INVERTER
	External Static Pressure (Max, Pa)		80	80	80
	Discharge	Side / Top	TOP	TOP	TOP
Pipe Connections #1	Liquid Pipe	mm(inch)	19.05(3/4)	19.05(3/4)	19.05(3/4)
	Low Pressure Gas Pipe	mm(inch)	41.3(1-5/8)	41.3(1-5/8)	41.3(1-5/8)
	High Pressure Gas Pipe	mm(inch)	34.9(1-3/8)	34.9(1-3/8)	34.9(1-3/8)
Pipe Connections #2	Liquid Pipe	mm(inch)	19.05(3/4)	19.05(3/4)	19.05(3/4)
	Gas Pipe	mm(inch)	41.3(1-5/8)	41.3(1-5/8)	41.3(1-5/8)
Dimensions(W × H × D)		mm	((1,240 × 1,690 × 760) × 1) + ((1,240 × 1,690 × 760) × 1) + ((1,240 × 1,690 × 760) × 1)	((1,240 × 1,690 × 760) × 1) + ((1,240 × 1,690 × 760) × 1) + ((1,240 × 1,690 × 760) × 1)	((1,240 × 1,690 × 760) × 1) + ((1,240 × 1,690 × 760) × 1) + ((1,240 × 1,690 × 760) × 1)
		inch	((48-13/16 x 66-17/32 x 29-29/32) x 1) + ((48-13/16 x 66-17/32 x 29-29/32) x 1) + ((48-13/16 x 66-17/32 x 29-29/32) x 1)	((48-13/16 x 66-17/32 x 29-29/32) x 1) + ((48-13/16 x 66-17/32 x 29-29/32) x 1) + ((48-13/16 x 66-17/32 x 29-29/32) x 1)	((48-13/16 x 66-17/32 x 29-29/32) x 1) + ((48-13/16 x 66-17/32 x 29-29/32) x 1) + ((48-13/16 x 66-17/32 x 29-29/32) x 1)
Net Weight		kg	(300 × 1) + (300 × 1) + (237 × 1)	(300 × 1) + (300 × 1) + (300 × 1)	(300 × 1) + (300 × 1) + (300 × 1)
		lbs	(661 × 1) + (661 × 1) + (522 × 1)	(661 × 1) + (661 × 1) + (661 × 1)	(661 × 1) + (661 × 1) + (661 × 1)
Sound Pressure Level	Cooling	dB(A)	66.0	66.0	67.0
	Heating	dB(A)	68.0	69.0	69.0
Sound Power Level	Cooling	dB(A)	91.0	92.0	92.0
	Heating	dB(A)	94.0	94.0	95.0
Protection Devices	High pressure protection	-	High pressure sensor / High pressure switch	High pressure sensor / High pressure switch	High pressure sensor / High pressure switch
	Compressor/Fan	-	Over-heat protection / Fan driver overload protector	Over-heat protection / Fan driver overload protector	Over-heat protection / Fan driver overload protector
	Inverter	-	Over-heat protection / Over-current protection	Over-heat protection / Over-current protection	Over-heat protection / Over-current protection
Communication Cable		No.xmm^2(VCTF-SB)	2C × 1.0 ~ 1.5	2C × 1.0 ~ 1.5	2C × 1.0 ~ 1.5
Refigerant	Refrigerant name		R410A	R410A	R410A
	Precharged Amount in factory	kg	45.5	48.0	48.0
		lbs	100.4	105.9	105.9
	TCO_2eq		94.981	100.200	100.200
	Control		Electronic Expansion Valve	Electronic Expansion Valve	Electronic Expansion Valve
Power Supply		Ø , V, Hz	380-400-415, 3, 50/60	380-400-415, 3, 50/60	380-400-415, 3, 50/60
Running Current	Cooling (Rated)	A	86.86 - 82.60 - 79.62	83.22 - 79.06 - 76.20	88.51 - 84.09 - 81.05
	Heating (Rated)	A	59.84 - 56.85 - 54.8	60.37 - 57.35 - 55.27	63.81 - 60.62 - 58.43
Number of maximum connectable indoor units ***			64	64	64

Notes:

1. Capacities are based on the following conditions:
   Cooling: - Indoor Temperature 27°C(80.6°F) DB/19°C(66.2°F) WB
   - Outdoor Temperature 35°C(95°F) DB/24°C(75.2°F) WB
   Heating: - Indoor Temperature 20°C(68°F) DB/15°C(59°F) WB
   - Outdoor Temperature 7°C(44.6°F) DB/6°C(42.8°F) WB
   Piping Length: - Interconnecting Piping Length 7.5m
   - Level Difference of Zero
2. Capacities are net capacity
3. EEV : Electronic Expansion Valve
4. Wiring cable size must comply with the applicable local and national code.
5. Due to our policy of innovation some specifications may be changed without prior notification

Conversion Formula
RT = kW x 0.284
kcal/h = kW x 860
Btu/h = kW x 3412
cfm = m^3/min x 35.3

HP			62	64	66
Model Name	Combination Unit		ARUM620LTE5	ARUM640LTE5	ARUM660LTE5
	Independent Unit		ARUM200LTE5	ARUM200LTE5	ARUM200LTE5
			ARUM180LTE5	ARUM200LTE5	ARUM200LTE5
			ARUM120LTE5	ARUM120LTE5	ARUM140LTE5
			ARUM120LTE5	ARUM120LTE5	ARUM120LTE5
Capacity	Cooling (Rated)	kW	173.6	179.2	184.8
		Btu/h	592,300	611,400	630,500
	Heating (Rated)	kW	173.6	179.2	184.8
		Btu/h	592,300	611,400	630,500
	Heating (Max)	kW	195.3	201.6	207.9
		Btu/h	666,500	688,000	709,500
Input	Cooling (Rated)	kW	56.88	60.12	61.10
	Heating (Rated)	kW	39.93	42.04	42.89
EER			3.05	2.98	3.02
COP	Rated capacity		4.35	4.26	4.31
SEER			8.07	7.98	7.78
SCOP			4.83	4.93	4.95
Exterior	Color		Morning Gray / Dawn Gray	Morning Gray / Dawn Gray	Morning Gray / Dawn Gray
	RAL code		RAL 7030 / RAL 7037	RAL 7030 / RAL 7037	RAL 7030 / RAL 7037
Heat Exchanger			Wide Louver Plus	Wide Louver Plus	Wide Louver Plus
Compressor	Type		Hermetically Sealed Scroll	Hermetically Sealed Scroll	Hermetically Sealed Scroll
	Piston Displacement	cm^3/rev	(62.1 x 4) + (43.8 x 2)	(62.1 x 4) + (43.8 x 2)	(62.1 x 4) + (43.8 x 2)
	Number of Revolution	rev/min	3,600 x 6	3,600 x 6	3,600 x 6
	Motor Output x Number	W x No.	(5,300 x 4) + (4,200 x 2)	(5,300 x 4) + (4,200 x 2)	(5,300 x 4) + (4,200 x 2)
	Starting Method		Inverter	Inverter	Inverter
	Oil Type		FW68D(PVE)	FW68D(PVE)	FW68D(PVE)
Fan	Type		Propeller fan	Propeller fan	Propeller fan
	Motor Output x Number	W	(900 x 4) + (1,200 x 2)	(900 x 4) + (1,200 x 2)	(900 x 6) + (1,200 x 1)
	Air Flow Rate(High)	m^3/min	(320 x 2) + (240 x 2)	(320 x 2) + (240 x 2)	(320 x 3) + (240 x 1)
		ft^3/min	(11,301 x 2) + (8,476 x 2)	(11,301 x 2) + (8,476 x 2)	(11,301 x 3) + (8,476 x 1)
	Drive		DC INVERTER	DC INVERTER	DC INVERTER
	External Static Pressure (Max, Pa)		80	80	80
	Discharge	Side / Top	TOP	TOP	TOP
Pipe Connections #1	Liquid Pipe	mm(inch)	22.2(7/8)	22.2(7/8)	22.2(7/8)
	Low Pressure Gas Pipe	mm(inch)	41.3(1-5/8)	41.3(1-5/8)	53.98(2-1/8)
	High Pressure Gas Pipe	mm(inch)	34.9(1-3/8)	34.9(1-3/8)	41.3(1-5/8)
Pipe Connections #2	Liquid Pipe	mm(inch)	22.2(7/8)	22.2(7/8)	22.2(7/8)
	Gas Pipe	mm(inch)	41.3(1-5/8)	41.3(1-5/8)	53.98(2-1/8)
Dimensions(W x H x D)		mm	((1,240 x 1,690 x 760) x 1) + ((1,240 x 1,690 x 760) x 1) + ((930 x 1,690 x 760) x 1) + ((930 x 1,690 x 760) x 1)	((1,240 x 1,690 x 760) x 1) + ((1,240 x 1,690 x 760) x 1) + ((930 x 1,690 x 760) x 1) + ((930 x 1,690 x 760) x 1)	((1,240 x 1,690 x 760) x 1) + ((1,240 x 1,690 x 760) x 1) + ((1,240 x 1,690 x 760) x 1) + ((930 x 1,690 x 760) x 1)
		inch	((48-13/16 x 66-17/32 x 29-29/32) x 1) + ((48-13/16 x 66-17/32 x 29-29/32) x 1) + ((36-5/8 x 66-17/32 x 29-29/32) x 1) + ((36-5/8 x 66-17/32 x 29-29/32) x 1)	((48-13/16 x 66-17/32 x 29-29/32) x 1) + ((48-13/16 x 66-17/32 x 29-29/32) x 1) + ((36-5/8 x 66-17/32 x 29-29/32) x 1) + ((36-5/8 x 66-17/32 x 29-29/32) x 1)	((48-13/16 x 66-17/32 x 29-29/32) x 1) + ((48-13/16 x 66-17/32 x 29-29/32) x 1) + ((48-13/16 x 66-17/32 x 29-29/32) x 1) + ((36-5/8 x 66-17/32 x 29-29/32) x 1)
Net Weight		kg	(300 x 1) + (300 x 1) + (215 x 1) + (215 x 1)	(300 x 1) + (300 x 1) + (215 x 1) + (215 x 1)	(300 x 1) + (300 x 1) + (237 x 1) + (215 x 1)
		lbs	(661 x 1) + (661 x 1) + (474 x 1) + (474 x 1)	(661 x 1) + (661 x 1) + (474 x 1) + (474 x 1)	(661 x 1) + (661 x 1) + (522 x 1) + (474 x 1)
Sound Pressure Level	Cooling	dB(A)	66.0	67.0	67.0
	Heating	dB(A)	68.0	69.0	69.0
Sound Power Level	Cooling	dB(A)	91.0	91.0	91.0
	Heating	dB(A)	93.0	94.0	94.0
Protection Devices	High pressure protection	-	High pressure sensor / High pressure switch	High pressure sensor / High pressure switch	High pressure sensor / High pressure switch
	Compressor/Fan	-	Over-heat protection / Fan driver overload protector	Over-heat protection / Fan driver overload protector	Over-heat protection / Fan driver overload protector
	Inverter	-	Over-heat protection / Over-current protection	Over-heat protection / Over-current protection	Over-heat protection / Over-current protection
Communication Cable		No.xmm^2(VCTF-SB)	2C x 1.0 ~ 1.5	2C x 1.0 ~ 1.5	2C x 1.0 ~ 1.5
Refigerant	Refrigerant name		R410A	R410A	R410A
	Precharged Amount in factory	kg	51.0	51.0	55.0
		lbs	112.4	112.4	121.3
	TCO_2eq		106.463	106.463	114.813
	Control		Electronic Expansion Valve	Electronic Expansion Valve	Electronic Expansion Valve
Power Supply		Ø , V, Hz	380-400-415, 3, 50/60	380-400-415, 3, 50/60	380-400-415, 3, 50/60
Running Current	Cooling (Rated)	A	92.96 - 88.31 - 85.12	98.25 - 93.34 - 89.96	99.84 - 94.84 - 91.42
	Heating (Rated)	A	65.23 - 61.97 - 59.73	68.68 - 65.25 - 62.89	70.07 - 66.57 - 64.16
Number of maximum connectable indoor units ***			64	64	64

Notes:

1. Capacities are based on the following conditions:
   Cooling: - Indoor Temperature 27°C(80.6°F) DB/19°C(66.2°F) WB
   - Outdoor Temperature 35°C(95°F) DB/24°C(75.2°F) WB
   Heating: - Indoor Temperature 20°C(68°F) DB/15°C(59°F) WB
   - Outdoor Temperature 7°C(44.6°F) DB/6°C(42.8°F) WB
   Piping Length: - Interconnecting Piping Length 7.5m
   - Level Difference of Zero
2. Capacities are net capacity
3. EEV : Electronic Expansion Valve
4. Wiring cable size must comply with the applicable local and national code.
5. Due to our policy of innovation some specifications may be changed without prior notification

Conversion Formula
RT = kW x 0.284
kcal/h = kW x 860
Btu/h = kW x 3412
cfm = m^3/min x 35.3

Specifications (For Europe)

HP			68	70	72
Model Name	Combination Unit		ARUM680LTE5	ARUM700LTE5	ARUM720LTE5
	Independent Unit		ARUM200LTE5 ARUM200LTE5 ARUM160LTE5 ARUM120LTE5	ARUM200LTE5 ARUM200LTE5 ARUM180LTE5 ARUM120LTE5	ARUM200LTE5 ARUM200LTE5 ARUM200LTE5 ARUM120LTE5
Capacity	Cooling (Rated)	kW	190.4	196.0	201.6
		Btu/h	649,600	668,800	687,900
	Heating (Rated)	kW	190.4	196.0	201.6
		Btu/h	649,600	668,800	687,900
	Heating (Max)	kW	214.2	220.5	226.8
		Btu/h	731,000	752,500	774,000
Input	Cooling (Rated)	kW	65.35	62.94	66.18
	Heating (Rated)	kW	44.63	44.95	47.06
EER			2.91	3.11	3.05
COP	Rated capacity		4.27	4.36	4.28
SEER			7.63	8.16	8.08
SCOP			5.02	4.87	4.96
Exterior	Color		Morning Gray / Dawn Gray	Morning Gray / Dawn Gray	Morning Gray / Dawn Gray
	RAL code		RAL 7030 / RAL 7037	RAL 7030 / RAL 7037	RAL 7030 / RAL 7037
Heat Exchanger			Wide Louver Plus	Wide Louver Plus	Wide Louver Plus
Compressor	Type		Hermetically Sealed Scroll	Hermetically Sealed Scroll	Hermetically Sealed Scroll
	Piston Displacement	cm^3/rev	(62.1 × 4) + (43.8 × 2)	(62.1 × 4) + (43.8 × 3)	(62.1 × 4) + (43.8 × 3)
	Number of Revolution	rev/min	3,600 × 6	3,600 × 7	3,600 × 7
	Motor Output × Number	W × No.	(5,300 × 4) + (4,200 × 2)	(5,300 × 4) + (4,200 × 3)	(5,300 × 4) + (4,200 × 3)
	Starting Method		Inverter	Inverter	Inverter
	Oil Type		FW68D(PVE)	FW68D(PVE)	FW68D(PVE)
Fan	Type		Propeller fan	Propeller fan	Propeller fan
	Motor Output × Number	W	(900 × 6) + (1,200 × 1)	(900 × 6) + (1,200 × 1)	(900 × 6) + (1,200 × 1)
	Air Flow Rate(High)	m^3/min	(320 × 3) + (240 × 1)	(320 × 3) + (240 × 1)	(320 × 3) + (240 × 1)
		ft^3/min	(11,301 × 3) + (8,476 × 1)	(11,301 × 3) + (8,476 × 1)	(11,301 × 3) + (8,476 × 1)
	Drive		DC INVERTER	DC INVERTER	DC INVERTER
	External Static Pressure (Max, Pa)		80	80	80
	Discharge	Side / Top	TOP	TOP	TOP
Pipe Connections #1	Liquid Pipe	mm(inch)	22.2(7/8)	22.2(7/8)	22.2(7/8)
	Low Pressure Gas Pipe	mm(inch)	53.98(2-1/8)	53.98(2-1/8)	53.98(2-1/8)
	High Pressure Gas Pipe	mm(inch)	41.3(1-5/8)	41.3(1-5/8)	41.3(1-5/8)
Pipe Connections #2	Liquid Pipe	mm(inch)	22.2(7/8)	22.2(7/8)	22.2(7/8)
	Gas Pipe	mm(inch)	53.98(2-1/8)	53.98(2-1/8)	53.98(2-1/8)
Dimensions(W × H × D)		mm	((1,240 × 1,690 × 760) x 1) + ((1,240 × 1,690 x 760) x 1) + ((1,240 x 1,690 x 760) x 1) + ((930 x 1,690 x 760) x 1)	((1,240 × 1,690 × 760) x 1) + ((1,240 × 1,690 x 760) x 1) + ((1,240 x 1,690 x 760) x 1) + ((930 x 1,690 x 760) x 1)	((1,240 × 1,690 × 760) x 1) + ((1,240 × 1,690 x 760) x 1) + ((1,240 x 1,690 x 760) x 1) + ((930 x 1,690 x 760) x 1)
		inch	((48-13/16 x 66-17/32 x 29-29/32) x 1) + ((48-13/16 x 66-17/32 x 29-29/32) x 1) + ((48-13/16 x 66-17/32 x 29-29/32) x 1) + ((36-5/8 x 66-17/32 x 29-29/32) x 1)	((48-13/16 x 66-17/32 x 29-29/32) x 1) + ((48-13/16 x 66-17/32 x 29-29/32) x 1) + ((48-13/16 x 66-17/32 x 29-29/32) x 1) + ((36-5/8 x 66-17/32 x 29-29/32) x 1)	((48-13/16 x 66-17/32 x 29-29/32) x 1) + ((48-13/16 x 66-17/32 x 29-29/32) x 1) + ((48-13/16 x 66-17/32 x 29-29/32) x 1) + ((36-5/8 x 66-17/32 x 29-29/32) x 1)
Net Weight		kg	(300 x 1) + (300 x 1) + (237 x 1) + (215 x 1)	(300 x 1) + (300 x 1) + (300 x 1) + (215 x 1)	(300 x 1) + (300 x 1) + (300 x 1) + (215 x 1)
		lbs	(661 x 1) + (661 x 1) + (522 x 1) + (474 x 1)	(661 x 1) + (661 x 1) + (661 x 1) + (474 x 1)	(661 x 1) + (661 x 1) + (661 x 1) + (474 x 1)
Sound Pressure Level	Cooling	dB(A)	67.0	67.0	67.0
	Heating	dB(A)	69.0	69.0	70.0
Sound Power Level	Cooling	dB(A)	92.0	92.0	92.0
	Heating	dB(A)	94.0	94.0	95.0
Protection Devices	High pressure protection	-	High pressure sensor / High pressure switch	High pressure sensor / High pressure switch	High pressure sensor / High pressure switch
	Compressor/Fan	-	Over-heat protection / Fan driver overload protector	Over-heat protection / Fan driver overload protector	Over-heat protection / Fan driver overload protector
	Inverter	-	Over-heat protection / Over-current protection	Over-heat protection / Over-current protection	Over-heat protection / Over-current protection
Communication Cable		No.xmm^2(VCTF-SB)	2C x 1.0 ~ 1.5	2C x 1.0 ~ 1.5	2C x 1.0 ~ 1.5
Refigerant	Refrigerant name		R410A	R410A	R410A
	Precharged Amount in factory	kg	55.0	57.5	57.5
		lbs	121.3	126.8	126.8
	TCO_2eq		114.813	120.031	120.031
	Control		Electronic Expansion Valve	Electronic Expansion Valve	Electronic Expansion Valve
Power Supply		Ø , V, Hz	380-400-415, 3, 50/60	380-400-415, 3, 50/60	380-400-415, 3, 50/60
Running Current	Cooling (Rated)	A	106.48 - 101.24 - 97.58	102.84 - 97.70 - 94.17	108.13 - 102.73 - 99.01
	Heating (Rated)	A	72.91 - 69.27 - 66.76	73.43 - 69.76 - 67.24	76.88 - 73.04 - 70.4
Number of maximum connectable indoor units ***			64	64	64

Notes:

1. Capacities are based on the following conditions:
   Cooling: - Indoor Temperature 27°C(80.6°F) DB/19°C(66.2°F) WB
   - Outdoor Temperature 35°C(95°F) DB/24°C(75.2°F) WB
   Heating: - Indoor Temperature 20°C(68°F) DB/15°C(59°F) WB
   - Outdoor Temperature 7°C(44.6°F) DB/6°C(42.8°F) WB
   Piping Length: - Interconnecting Piping Length 7.5m
   - Level Difference of Zero
2. Capacities are net capacity
3. EEV : Electronic Expansion Valve
4. Wiring cable size must comply with the applicable local and national code.
5. Due to our policy of innovation some specifications may be changed without prior notification

Conversion Formula

RT = kW x 0.284
kcal/h = kW x 860
Btu/h = kW x 3412
cfm = m^3/min x 35.3

HP			74	76	78
Model Name	Combination Unit		ARUM740LTE5	ARUM760LTE5	ARUM780LTE5
	Independent Unit		ARUM200LTE5 ARUM200LTE5 ARUM200LTE5 ARUM140LTE5	ARUM200LTE5 ARUM200LTE5 ARUM200LTE5 ARUM160LTE5	ARUM200LTE5 ARUM200LTE5 ARUM200LTE5 ARUM180LTE5
Capacity	Cooling (Rated)	kW	207.2	212.8	218.4
		Btu/h	707,000	726,100	745,200
	Heating (Rated)	kW	207.2	212.8	218.4
		Btu/h	707,000	726,100	745,200
	Heating (Max)	kW	233.1	239.4	245.7
		Btu/h	795,500	817,000	838,500
Input	Cooling (Rated)	kW	67.16	71.41	69.00
	Heating (Rated)	kW	47.91	49.65	49.97
EER			3.09	2.98	3.17
COP	Rated capacity		4.32	4.29	4.37
SEER			7.91	7.77	8.24
SCOP			4.98	5.04	4.91
Exterior	Color		Morning Gray / Dawn Gray	Morning Gray / Dawn Gray	Morning Gray / Dawn Gray
	RAL code		RAL 7030 / RAL 7037	RAL 7030 / RAL 7037	RAL 7030 / RAL 7037
Heat Exchanger			Wide Louver Plus	Wide Louver Plus	Wide Louver Plus
Compressor	Type		Hermetically Sealed Scroll	Hermetically Sealed Scroll	Hermetically Sealed Scroll
	Piston Displacement	cm^3/rev	(62.1 × 4) + (43.8 × 3)	(62.1 × 4) + (43.8 × 3)	(62.1 × 4) + (43.8 × 4)
	Number of Revolution	rev/min	3,600 × 7	3,600 × 7	3,600 × 8
	Motor Output × Number	W × No.	(5,300 × 4) + (4,200 × 3)	(5,300 × 4) + (4,200 × 3)	(5,300 × 4) + (4,200 × 4)
	Starting Method		Inverter	Inverter	Inverter
	Oil Type		FW68D(PVE)	FW68D(PVE)	FW68D(PVE)
Fan	Type		Propeller fan	Propeller fan	Propeller fan
	Motor Output × Number	W	(900 × 8)	(900 × 8)	(900 × 8)
	Air Flow Rate(High)	m^3/min	(320 × 4)	(320 × 4)	(320 × 4)
		ft^3/min	(11,301 × 4)	(11,301 × 4)	(11,301 × 4)
	Drive		DC INVERTER	DC INVERTER	DC INVERTER
	External Static Pressure (Max, Pa)		80	80	80
	Discharge	Side / Top	TOP	TOP	TOP
Pipe Connections #1	Liquid Pipe	mm(inch)	22.2(7/8)	22.2(7/8)	22.2(7/8)
	Low Pressure Gas Pipe	mm(inch)	53.98(2-1/8)	53.98(2-1/8)	53.98(2-1/8)
	High Pressure Gas Pipe	mm(inch)	41.3(1-5/8)	41.3(1-5/8)	41.3(1-5/8)
Pipe Connections #2	Liquid Pipe	mm(inch)	22.2(7/8)	22.2(7/8)	22.2(7/8)
	Gas Pipe	mm(inch)	53.98(2-1/8)	53.98(2-1/8)	53.98(2-1/8)
Dimensions(W × H × D)		mm	((1,240 x 1,690 x 760) x 1) + ((1,240 x 1,690 x 760) x 1) + ((1,240 x 1,690 x 760) x 1) + ((1,240 x 1,690 x 760) x 1)	((1,240 x 1,690 x 760) x 1) + ((1,240 x 1,690 x 760) x 1) + ((1,240 x 1,690 x 760) x 1) + ((1,240 x 1,690 x 760) x 1)	((1,240 x 1,690 x 760) x 1) + ((1,240 x 1,690 x 760) x 1) + ((1,240 x 1,690 x 760) x 1) + ((1,240 x 1,690 x 760) x 1)
		inch	((48-13/16 x 66-17/32 x 29-29/32) x 1) + ((48-13/16 x 66-17/32 x 29-29/32) x 1) + ((48-13/16 x 66-17/32 x 29-29/32) x 1) + ((48-13/16 x 66-17/32 x 29-29/32) x 1)	((48-13/16 x 66-17/32 x 29-29/32) x 1) + ((48-13/16 x 66-17/32 x 29-29/32) x 1) + ((48-13/16 x 66-17/32 x 29-29/32) x 1) + ((48-13/16 x 66-17/32 x 29-29/32) x 1)	((48-13/16 x 66-17/32 x 29-29/32) x 1) + ((48-13/16 x 66-17/32 x 29-29/32) x 1) + ((48-13/16 x 66-17/32 x 29-29/32) x 1) + ((48-13/16 x 66-17/32 x 29-29/32) x 1)
Net Weight		kg	(300 x 1) + (300 x 1) + (300 x 1) + (237 x 1)	(300 x 1) + (300 x 1) + (300 x 1) + (237 x 1)	(300 x 1) + (300 x 1) + (300 x 1) + (300 x 1)
		lbs	(661 x 1) + (661 x 1) + (661 x 1) + (522 x 1)	(661 x 1) + (661 x 1) + (661 x 1) + (522 x 1)	(661 x 1) + (661 x 1) + (661 x 1) + (661 x 1)
Sound Pressure Level	Cooling	dB(A)	68.0	68.0	68.0
	Heating	dB(A)	69.0	70.0	70.0
Sound Power Level	Cooling	dB(A)	92.0	93.0	93.0
	Heating	dB(A)	95.0	95.0	95.0
Protection Devices	High pressure protection	-	High pressure sensor / High pressure switch	High pressure sensor / High pressure switch	High pressure sensor / High pressure switch
	Compressor/Fan	-	Over-heat protection / Fan driver overload protector	Over-heat protection / Fan driver overload protector	Over-heat protection / Fan driver overload protector
	Inverter	-	Over-heat protection / Over-current protection	Over-heat protection / Over-current protection	Over-heat protection / Over-current protection
Communication Cable		No.xmm^2(VCTF-SB)	2C x 1.0 ~ 1.5	2C x 1.0 ~ 1.5	2C x 1.0 ~ 1.5
Refigerant	Refrigerant name		R410A	R410A	R410A
	Precharged Amount in factory	kg	61.5	61.5	64.0
		lbs	135.7	135.7	141.2
	TCO_2eq		128.381	128.381	133.600
	Control		Electronic Expansion Valve	Electronic Expansion Valve	Electronic Expansion Valve
Power Supply		Ø , V, Hz	380-400-415, 3, 50/60	380-400-415, 3, 50/60	380-400-415, 3, 50/60
Running Current	Cooling (Rated)	A	109.72 - 104.23 - 100.47	116.36 - 110.63 - 106.63	112.73 - 107.09 - 103.22
	Heating (Rated)	A	78.27 - 74.36 - 71.67	81.11 - 77.06 - 74.27	81.64 - 77.55 - 74.75
Number of maximum connectable indoor units ***			64	64	64

Notes:

1. Capacities are based on the following conditions:
   Cooling: - Indoor Temperature 27°C(80.6°F) DB/19°C(66.2°F) WB
   - Outdoor Temperature 35°C(95°F) DB/24°C(75.2°F) WB
   Heating: - Indoor Temperature 20°C(68°F) DB/15°C(59°F) WB
   - Outdoor Temperature 7°C(44.6°F) DB/6°C(42.8°F) WB
   Piping Length: - Interconnecting Piping Length 7.5m
   - Level Difference of Zero
2. Capacities are net capacity
3. EEV : Electronic Expansion Valve
4. Wiring cable size must comply with the applicable local and national code.
5. Due to our policy of innovation some specifications may be changed without prior notification

Conversion Formula

RT = kW x 0.284
kcal/h = kW x 860
Btu/h = kW x 3412
cfm = m^3/min x 35.3

Specifications (For Europe)

HP			80
Model Name	Combination Unit		ARUM800LTE5
	Independent Unit		ARUM200LTE5
			ARUM200LTE5
			ARUM200LTE5
			ARUM200LTE5
Capacity	Cooling (Rated)	kW	224.0
		Btu/h	764,300
	Heating (Rated)	kW	224.0
		Btu/h	764,300
	Heating (Max)	kW	252.0
		Btu/h	860,000
Input	Cooling (Rated)	kW	72.24
	Heating (Rated)	kW	52.08
EER			3.10
COP	Rated capacity		4.30
SEER			8.17
SCOP			4.98
Exterior	Color		Morning Gray / Dawn Gray
	RAL code		RAL 7030 / RAL 7037
Heat Exchanger			Wide Louver Plus
Compressor	Type		Hermetically Sealed Scroll
	Piston Displacement	cm^3/rev	(62.1 × 4) + (43.8 × 4)
	Number of Revolution	rev/min	3,600 × 8
	Motor Output × Number	W × No.	(5,300 × 4) + (4,200 × 4)
	Starting Method		Inverter
	Oil Type		FW68D(PVE)
Fan	Type		Propeller fan
	Motor Output × Number	W	(900 × 8)
	Air Flow Rate(High)	m^3/min	(320 × 4)
		ft^3/min	(11,301 × 4)
	Drive		DC INVERTER
	External Static Pressure (Max, Pa)		80
	Discharge	Side / Top	TOP
Pipe Connections #1	Liquid Pipe	mm(inch)	22.2(7/8)
	Low Pressure Gas Pipe	mm(inch)	53.98(2-1/8)
	High Pressure Gas Pipe	mm(inch)	41.3(1-5/8)
Pipe Connections #2	Liquid Pipe	mm(inch)	22.2(7/8)
	Gas Pipe	mm(inch)	53.98(2-1/8)
Dimensions(W × H × D)		mm	((1,240 × 1,690 × 760) × 1) + ((1,240 × 1,690 × 760) × 1) + ((1,240 × 1,690 × 760) × 1) + ((1,240 × 1,690 × 760) × 1)
		inch	((48-13/16 × 66-17/32 × 29-29/32) × 1) + ((48-13/16 × 66-17/32 × 29-29/32) × 1) + ((48-13/16 × 66-17/32 × 29-29/32) × 1) + ((48-13/16 × 66-17/32 × 29-29/32) × 1)
Net Weight		kg	(300 × 1) + (300 × 1) + (300 × 1) + (300 × 1)
		lbs	(661 × 1) + (661 × 1) + (661 × 1) + (661 × 1)
Sound Pressure Level	Cooling	dB(A)	68.0
	Heating	dB(A)	71.0
Sound Power Level	Cooling	dB(A)	93.0
	Heating	dB(A)	96.0
Protection Devices	High pressure protection	-	High pressure sensor / High pressure switch
	Compressor/Fan	-	Over-heat protection / Fan driver overload protector
	Inverter	-	Over-heat protection / Over-current protection
Communication Cable		No.xmm^2(VCTF-SB)	2C × 1.0 ~ 1.5
Refigerant	Refrigerant name		R410A
	Precharged Amount in factory	kg	64.0
		lbs	141.2
	TCO_2eq		133.600
	Control		Electronic Expansion Valve
Power Supply		Ø , V, Hz	380-400-415, 3, 50/60
Running Current	Cooling (Rated)	A	118.02 - 112.12 - 108.07
	Heating (Rated)	A	85.08 - 80.83 - 77.91
Number of maximum connectable indoor units ***			64

Notes:

1. Capacities are based on the following conditions:
   Cooling: - Indoor Temperature 27°C(80.6°F) DB/19°C(66.2°F) WB
   - Outdoor Temperature 35°C(95°F) DB/24°C(75.2°F) WB
   Heating: - Indoor Temperature 20°C(68°F) DB/15°C(59°F) WB
   - Outdoor Temperature 7°C(44.6°F) DB/6°C(42.8°F) WB
   Piping Length: - Interconnecting Piping Length 7.5m
   - Level Difference of Zero
2. Capacities are net capacity
3. EEV : Electronic Expansion Valve
4. Wiring cable size must comply with the applicable local and national code.
5. Due to our policy of innovation some specifications may be changed without prior notification

Conversion Formula
RT = kW x 0.284
kcal/h = kW x 860
Btu/h = kW x 3412
cfm = m^3/min x 35.3

2. Specifications (For Australia)

HP			8	10	12
Model Name	Combination Unit		ARUM080LTE5	ARUM100LTE5	ARUM120LTE5
	Independent Unit		ARUM080LTE5	ARUM100LTE5	ARUM120LTE5
Capacity	Cooling (Total)	kW	22.4	28.0	33.6
		Btu/h	76,400	95,500	114,600
	Cooling (Net/Rated)	kW	21.6	27.3	32.5
		Btu/h	73,700	93,200	110,900
	Heating (Total)	kW	25.2	31.5	37.8
		Btu/h	86,000	107,500	129,000
	Heating (Net/Rated)	kW	22.0	27.6	33.3
		Btu/h	75,100	94,200	113,600
Power Input	Cooling (Total)	kW	4.49	5.80	7.58
	Heating (Total)	kW	4.78	5.92	8.26
EER	Total		4.99	4.83	4.43
	Net		4.19	4.01	3.90
COP	Total		5.27	5.32	4.58
	Net		4.49	4.55	4.16
Power Factor	Rated	-	0.93	0.93	0.93
Heat Exchanger			Wide Louver Puls	Wide Louver Puls	Wide Louver Puls
Exterior	Color		Morning Gray / Dawn Gray	Morning Gray / Dawn Gray	Morning Gray / Dawn Gray
	RAL code		RAL 7030 / 7037	RAL 7030 / 7037	RAL 7030 / 7037
Compressor	Type		Hermetically Sealed Scroll	Hermetically Sealed Scroll	Hermetically Sealed Scroll
	Piston Displacement	cm^3/rev	43.8	62.1	62.1
	Number of Revolution	rev/min	3,600	3,600	3,600
	Motor Output × Number	W × No.	4,200 × 1	5,300 × 1	5,300 × 1
	Starting Method		Inverter	Inverter	Inverter
	Oil Type		FW68D(PVE)	FW68D(PVE)	FW68D(PVE)
Fan	Type		Propeller fan	Propeller fan	Propeller fan
	Motor Output × Number	W	1,200 × 1	1,200 × 1	1,200 × 1
	Air Flow Rate(High)	m^3/min	240 × 1	240 × 1	240 × 1
		ft^3/min	8,476 × 1	8,476 × 1	8,476 × 1
	External Static Perssure	Max., Pa	80	80	80
	Drive		DC INVERTER	DC INVERTER	DC INVERTER
	Discharge	Side / Top	TOP	TOP	TOP
Pipe Connections #1	Liquid Pipe	mm(inch)	9.52(3/8)	9.52(3/8)	12.7(1/2)
	Low Pressure Gas Pipe	mm(inch)	19.05(3/4)	22.2(7/8)	28.58(1-1/8)
	High Pressure Gas Pipe	mm(inch)	15.88(5/8)	19.05(3/4)	19.05(3/4)
Pipe Connections #2	Liquid Pipe	mm(inch)	9.52(3/8)	9.52(3/8)	12.7(1/2)
	Gas Pipe	mm(inch)	19.05(3/4)	22.2(7/8)	28.58(1-1/8)
Dimensions(W × H × D)		mm	(930 × 1,690 × 760) × 1	(930 × 1,690 × 760) × 1	(930 × 1,690 × 760) × 1
		inch	(36-5/8 × 66-17/32 × 29-29/32) × 1	(36-5/8 × 66-17/32 × 29-29/32) × 1	(36-5/8 × 66-17/32 × 29-29/32) × 1
Net Weight		kg	198 × 1	215 × 1	215 × 1
		lbs	437 × 1	474 × 1	474 × 1
Sound Pressure Level	Cooling	dB(A)	58.0	58.0	59.0
	Heating	dB(A)	59.0	59.0	60.0
Sound Power Level	Cooling	dB(A)	84.0	85.0	86.0
	Heating	dB(A)	87.0	88.0	89.0
Protection Devices	High pressure protection	-	High pressure sensor / High pressure switch		
	Compressor/Fan	-	Over-heat protection / Fan driver overload protector		
	Inverter	-	Over-heat protection / Over-current protection		
Communication Cable (VCTF-SB)		No.xmm^2	2C x 1.0 ~ 1.5	2C x 1.0 ~ 1.5	2C x 1.0 ~ 1.5
Refigerant	Refrigerant name		R410A	R410A	R410A
	Precharged Amount	kg	7.5	9.5	9.5
		lbs	16.5	20.9	20.9
	t-CO_2 eq		15.7	19.8	19.8
	Control		Electronic Expansion Valve	Electronic Expansion Valve	Electronic Expansion Valve
Power Supply		Ø , V, Hz	380~415, 3, 50	380~415, 3, 50	380~415, 3, 50
			380, 3, 60	380, 3, 60	380, 3, 60
Number of maximum connectable indoor units ***			13(20)	16(25)	20(30)

Notes:

1. Capacities are based on the following conditions:
   Cooling: - Indoor Temperature 27°C(80.6°F) DB/19°C(66.2°F) WB
   - Outdoor Temperature 35°C(95°F) DB/24°C(75.2°F) WB
   Heating: - Indoor Temperature 20°C(68°F) DB/15°C(59°F) WB
   - Outdoor Temperature 7°C(44.6°F) DB/6°C(42.8°F) WB
   Piping Length: - Interconnecting Piping Length 7.5m
   - Level Difference of Zero
2. Capacities are net capacity
3. EEV : Electronic Expansion Valve
4. Wiring cable size must comply with the applicable local and national code.
5. Due to our policy of innovation some specifications may be changed without prior notification

Conversion Formula
RT = kW x 0.284
kcal/h = kW x 860
Btu/h = kW x 3412
cfm = m^3/min x 35.3

HP			14	16	18
Model Name	Combination Unit		ARUM140LTE5	ARUM160LTE5	ARUM180LTE5
	Independent Unit		ARUM140LTE5	ARUM160LTE5	ARUM180LTE5
Capacity	Cooling (Total)	kW	39.2	44.8	50.4
		Btu/h	133,800	152,900	172,000
	Cooling (Net/Rated)	kW	38.3	44.3	49.0
		Btu/h	130,700	151,200	167,200
	Heating (Total)	kW	44.1	50.4	56.7
		Btu/h	150,500	172,000	193,500
	Heating (Net/Rated)	kW	38.0	43.3	49.5
		Btu/h	129,700	147,700	168,900
Power Input	Cooling (Total)	kW	8.68	10.89	10.91
	Heating (Total)	kW	9.72	12.39	11.94
EER	Total		4.52	4.11	4.62
	Net		3.80	3.33	3.80
COP	Total		4.54	4.07	4.75
	Net		4.00	3.44	4.27
Power Factor	Rated	-	0.93	0.93	0.93
Heat Exchanger			Wide Louver Puls	Wide Louver Puls	Wide Louver Puls
Exterior	Color		Morning Gray / Dawn Gray	Morning Gray / Dawn Gray	Morning Gray / Dawn Gray
	RAL code		RAL 7030 / 7037	RAL 7030 / 7037	RAL 7030 / 7037
Compressor	Type		Hermetically Sealed Scroll	Hermetically Sealed Scroll	Hermetically Sealed Scroll
	Piston Displacement	cm^3/rev	62.1	62.1	62.1 x 1 + 43.8 x 1
	Number of Revolution	rev/min	3,600	3,600	3,600 x 2
	Motor Output x Number	W x No.	5,300 x 1	5,300 x 1	5,300 x 1 + 4,200 x 1
	Starting Method		Inverter	Inverter	Inverter
	Oil Type		FW68D(PVE)	FW68D(PVE)	FW68D(PVE)
Fan	Type		Propeller fan	Propeller fan	Propeller fan
	Motor Output x Number	W	900 x 2	900 x 2	900 x 2
	Air Flow Rate(High)	m^3/min	320 x 1	320 x 1	320 x 1
		ft^3/min	1,1301 x 1	1,1301 x 1	1,1301 x 1
	External Static Perssure	Max., Pa	80	80	80
	Drive		DC INVERTER	DC INVERTER	DC INVERTER
	Discharge	Side / Top	TOP	TOP	TOP
Pipe Connections #1	Liquid Pipe	mm(inch)	12.7(1/2)	12.7(1/2)	15.88(5/8)
	Low Pressure Gas Pipe	mm(inch)	28.58(1-1/8)	28.58(1-1/8)	28.58(1-1/8)
	High Pressure Gas Pipe	mm(inch)	22.2(7/8)	22.2(7/8)	22.2(7/8)
Pipe Connections #2	Liquid Pipe	mm(inch)	12.7(1/2)	12.7(1/2)	15.88(5/8)
	Gas Pipe	mm(inch)	28.58(1-1/8)	28.58(1-1/8)	28.58(1-1/8)
Dimensions(W x H x D)		mm	(1,240 x 1,690 x 760)x1	(1,240 x 1,690 x 760)x1	(1,240 x 1,690 x 760)x1
		inch	(48-13/16 x 66-17/32 x 29-29/32) x 1	(48-13/16 x 66-17/32 x 29-29/32) x 1	(48-13/16 x 66-17/32 x 29-29/32) x 1
Net Weight		kg	242 x 1	242 x 1	300 x 1
		lbs	534 x 1	534 x 1	661 x 1
Sound Pressure Level	Cooling	dB(A)	60.0	60.5	61.0
	Heating	dB(A)	61.0	61.5	62.0
Sound Power Level	Cooling	dB(A)	89.0	90.0	92.0
	Heating	dB(A)	93.0	94.0	95.0
Protection Devices	High pressure protection	-	High pressure sensor / High pressure switch		
	Compressor/Fan	-	Over-heat protection / Fan driver overload protector		
	Inverter	-	Over-heat protection / Over-current protection		
Communication Cable (VCTF-SB)		No.xmm^2	2C x 1.0 ~ 1.5	2C x 1.0 ~ 1.5	2C x 1.0 ~ 1.5
Refigerant	Refrigerant name		R410A	R410A	R410A
	Precharged Amount	kg	13.5	13.5	16.0
		lbs	29.8	29.8	35.3
	t-CO_2 eq		28.2	28.2	33.4
	Control		Electronic Expansion Valve	Electronic Expansion Valve	Electronic Expansion Valve
Power Supply		Ø , V, Hz	380~415, 3, 50	380~415, 3, 50	380~415, 3, 50
			380, 3, 60	380, 3, 60	380, 3, 60
Number of maximum connectable indoor units ***			23(35)	26(40)	29(45)

Notes:

1. Capacities are based on the following conditions:
   Cooling: - Indoor Temperature 27°C(80.6°F) DB/19°C(66.2°F) WB
   - Outdoor Temperature 35°C(95°F) DB/24°C(75.2°F) WB
   Heating: - Indoor Temperature 20°C(68°F) DB/15°C(59°F) WB
   - Outdoor Temperature 7°C(44.6°F) DB/6°C(42.8°F) WB
   Piping Length: - Interconnecting Piping Length 7.5m
   - Level Difference of Zero
2. Capacities are net capacity
3. EEV : Electronic Expansion Valve
4. Wiring cable size must comply with the applicable local and national code.
5. Due to our policy of innovation some specifications may be changed without prior notification

Conversion Formula
RT = kW x 0.284
kcal/h = kW x 860
Btu/h = kW x 3412
cfm = m^3/min x 35.3

HP			20	22	24
Model Name	Combination Unit		ARUM200LTE5	ARUM220LTE5	ARUM240LTE5
	Independent Unit		ARUM200LTE5	ARUM220LTE5	ARUM240LTE5
Capacity	Cooling (Total)	kW	56.0	61.6	67.2
		Btu/h	191,100	210,200	229,300
	Cooling (Net/Rated)	kW	54.8	60.0	66.0
		Btu/h	187,000	204,700	225,200
	Heating (Total)	kW	63.0	69.3	74.3
		Btu/h	215,000	236,500	253,400
	Heating (Net/Rated)	kW	55.5	59.5	65.3
		Btu/h	189,400	203,000	222,800
Power Input	Cooling (Total)	kW	12.77	15.70	17.40
	Heating (Total)	kW	14.69	16.76	18.80
EER	Total		4.39	3.92	3.86
	Net		3.66	3.34	3.34
COP	Total		4.29	4.13	3.95
	Net		3.97	3.84	4.32
Power Factor	Rated	-	0.93	0.93	0.93
Heat Exchanger			Wide Louver Puls	Wide Louver Puls	Wide Louver Puls
Exterior	Color		Morning Gray / Dawn Gray	Morning Gray / Dawn Gray	Morning Gray / Dawn Gray
	RAL code		RAL 7030 / 7037	RAL 7030 / 7037	RAL 7030 / 7037
Compressor	Type		Hermetically Sealed Scroll	Hermetically Sealed Scroll	Hermetically Sealed Scroll
	Piston Displacement	cm^3/rev	62.1 × 1 + 43.8 × 1	62.1 × 1 + 43.8 × 1	62.1 × 2
	Number of Revolution	rev/min	3,600 × 2	3,600 × 2	3,600 × 2
	Motor Output × Number	W × No.	5,300 × 1 + 4,200 × 1	5,300 × 1 + 4,200 × 1	5,300 × 2
	Starting Method		Inverter	Inverter	Inverter
	Oil Type		FW68D(PVE)	FW68D(PVE)	FW68D(PVE)
Fan	Type		Propeller fan	Propeller fan	Propeller fan
	Motor Output × Number	W	900 × 2	900 × 2	900 × 2
	Air Flow Rate(High)	m^3/min	320 × 1	320 × 1	320 × 1
		ft^3/min	1,1301 × 1	1,1301 × 1	1,1301 × 1
	External Static Perssure	Max., Pa	80	80	80
	Drive		DC INVERTER	DC INVERTER	DC INVERTER
	Discharge	Side / Top	TOP	TOP	TOP
Pipe Connections #1	Liquid Pipe	mm(inch)	15.88(5/8)	15.88(5/8)	15.88(5/8)
	Low Pressure Gas Pipe	mm(inch)	28.58(1-1/8)	28.58(1-1/8)	34.9(1-3/8)
	High Pressure Gas Pipe	mm(inch)	22.2(7/8)	28.58(1-1/8)	28.58(1-1/8)
Pipe Connections #2	Liquid Pipe	mm(inch)	15.88(5/8)	15.88(5/8)	15.88(5/8)
	Gas Pipe	mm(inch)	28.58(1-1/8)	28.58(1-1/8)	34.9(1-3/8)
Dimensions(W × H × D)		mm	(1,240 × 1,690 × 760)×1	(1,240 × 1,690 × 760)×1	(1,240 × 1,690 × 760)×1
		inch	(48-13/16 x 66-17/32 x 29-29/32) x 1	(48-13/16 x 66-17/32 x 29-29/32) x 1	(48-13/16 x 66-17/32 x 29-29/32) x 1
Net Weight		kg	300 × 1	300 × 1	310 × 1
		lbs	661 × 1	661 × 1	683 × 1
Sound Pressure Level	Cooling	dB(A)	62.0	64.5	65.0
	Heating	dB(A)	64.5	65.5	67.0
Sound Power Level	Cooling	dB(A)	93.0	93.0	95.0
	Heating	dB(A)	96.0	97.0	99.0
Protection Devices	High pressure protection	-	High pressure sensor / High pressure switch		
	Compressor/Fan	-	Over-heat protection / Fan driver overload protector		
	Inverter	-	Over-heat protection / Over-current protection		
Communication Cable (VCTF-SB)		No.xmm^2	2C × 1.0 ~ 1.5	2C × 1.0 ~ 1.5	2C × 1.0 ~ 1.5
Refigerant	Refrigerant name		R410A	R410A	R410A
	Precharged Amount	kg	16.0	16.0	17.0
		lbs	35.3	35.3	37.5
	t-CO2 eq		33.4	33.4	35.5
	Control		Electronic Expansion Valve	Electronic Expansion Valve	Electronic Expansion Valve
Power Supply		Ø , V, Hz	380~415, 3, 50	380~415, 3, 50	380~415, 3, 50
			380, 3, 60	380, 3, 60	380, 3, 60
Number of maximum connectable indoor units ***			32(50)	35(56)	39(61)

Notes:

1. Capacities are based on the following conditions:
   Cooling: - Indoor Temperature 27°C(80.6°F) DB/19°C(66.2°F) WB
   - Outdoor Temperature 35°C(95°F) DB/24°C(75.2°F) WB
   Heating: - Indoor Temperature 20°C(68°F) DB/15°C(59°F) WB
   - Outdoor Temperature 7°C(44.6°F) DB/6°C(42.8°F) WB
   Piping Length: - Interconnecting Piping Length 7.5m
   - Level Difference of Zero
2. Capacities are net capacity
3. EEV : Electronic Expansion Valve
4. Wiring cable size must comply with the applicable local and national code.
5. Due to our policy of innovation some specifications may be changed without prior notification

Conversion Formula
RT = kW x 0.284
kcal/h = kW x 860
Btu/h = kW x 3412
cfm = m^3/min x 35.3

Specifications (For Australia)

HP			26	22	24
Model Name	Combination Unit		ARUM260LTE5	ARUM221LTE5	ARUM241LTE5
	Independent Unit		ARUM260LTE5	ARUM120LTE5	ARUM120LTE5
				ARUM100LTE5	ARUM120LTE5
Capacity	Cooling (Total)	kW	72.8	61.6	67.2
		Btu/h	248,400	210,200	229,300
	Cooling (Net/Rated)	kW	70.5	59.8	65.0
		Btu/h	240,600	204,100	221,800
	Heating (Total)	kW	74.3	69.3	75.6
		Btu/h	253,400	236,500	257,900
	Heating (Net/Rated)	kW	65.8	60.9	66.6
		Btu/h	224,500	207,800	227,300
Power Input	Cooling (Total)	kW	20.20	13.38	15.16
	Heating (Total)	kW	19.15	14.18	16.52
EER	Total		3.60	4.60	4.43
	Net		3.11	3.95	3.90
COP	Total		3.88	4.89	4.58
	Net		4.45	4.33	4.16
Power Factor	Rated	-	0.93	0.93	0.93
Heat Exchanger			Wide Louver Puls	Wide Louver Puls	Wide Louver Puls
Exterior	Color		Morning Gray / Dawn Gray	Morning Gray / Dawn Gray	Morning Gray / Dawn Gray
	RAL code		RAL 7030 / 7037	RAL 7030 / 7037	RAL 7030 / 7037
Compressor	Type		Hermetically Sealed Scroll	Hermetically Sealed Scroll	Hermetically Sealed Scroll
	Piston Displacement	cm^3/rev	62.1 × 2	62.1 × 2	62.1 × 2
	Number of Revolution	rev/min	3,600 × 2	3,600 × 2	3,600 × 2
	Motor Output × Number	W × No.	5,300 × 2	5,300 × 2	5,300 × 2
	Starting Method		Inverter	Inverter	Inverter
	Oil Type		FW68D(PVE)	FW68D(PVE)	FW68D(PVE)
Fan	Type		Propeller fan	Propeller fan	Propeller fan
	Motor Output × Number	W	900 × 2	(1200 × 1) + (1,200 × 1)	(1200 × 1) + (1,200 × 1)
	Air Flow Rate(High)	m^3/min	320 × 1	(240 × 1) + (240 × 1)	(240 × 1) + (240 × 1)
		ft^3/min	1,1301 × 1	(8,476 × 1) + (8,476 × 1)	(8,476 × 1) + (8,476 × 1)
	External Static Perssure	Max., Pa	80	80	80
	Drive		DC INVERTER	DC INVERTER	DC INVERTER
	Discharge	Side / Top	TOP	TOP	TOP
Pipe Connections #1	Liquid Pipe	mm(inch)	19.05(3/4)	15.88(5/8)	15.88(5/8)
	Low Pressure Gas Pipe	mm(inch)	34.9(1-3/8)	28.58(1-1/8)	34.9(1-3/8)
	High Pressure Gas Pipe	mm(inch)	28.58(1-1/8)	28.58(1-1/8)	28.58(1-1/8)
Pipe Connections #2	Liquid Pipe	mm(inch)	19.05(3/4)	15.88(5/8)	15.88(5/8)
	Gas Pipe	mm(inch)	34.9(1-3/8)	28.58(1-1/8)	34.9(1-3/8)
Dimensions(W × H × D)		mm	(1,240 × 1,690 × 760)×1	(930 × 1,690 × 760) × 1 + (930 × 1,690 × 760) × 1	(930 × 1,690 × 760) × 1 + (930 × 1,690 × 760) × 1
		inch	(48-13/16 × 66-17/32 × 29-29/32) × 1	(36-5/8 × 66-17/32 × 29-29/32) × 1 + (36-5/8 × 66-17/32 × 29-29/32) × 1	(36-5/8 × 66-17/32 × 29-29/32) × 1 + (36-5/8 × 66-17/32 × 29-29/32) × 1
Net Weight		kg	310 × 1	(215 × 1) + (215 × 1)	(215 × 1) + (215 × 1)
		lbs	683 × 1	(474 × 1) + (474 × 1)	(474 × 1) + (474 × 1)
Sound Pressure Level	Cooling	dB(A)	65.0	61.5	62.0
	Heating	dB(A)	67.0	62.5	63.0
Sound Power Level	Cooling	dB(A)	95.0	88.5	89.0
	Heating	dB(A)	99.0	91.5	92.0
Protection Devices	High pressure protection	-	High pressure sensor / High pressure switch		
	Compressor/Fan	-	Over-heat protection / Fan driver overload protector		
	Inverter	-	Over-heat protection / Over-current protection		
Communication Cable (VCTF-SB)		No.xmm^2	2C × 1.0 ~ 1.5	2C × 1.0 ~ 1.5	2C × 1.0 ~ 1.5
Refigerant	Refrigerant name		R410A	R410A	R410A
	Precharged Amount	kg	17.0	19.0	19.0
		lbs	37.5	41.9	41.9
	t-CO2 eq		35.5	39.7	39.7
	Control		Electronic Expansion Valve	Electronic Expansion Valve	Electronic Expansion Valve
Power Supply		Ø , V, Hz	380~415, 3, 50	380~415, 3, 50	380~415, 3, 50
			380, 3, 60	380, 3, 60	380, 3, 60
Number of maximum connectable indoor units ***			42(64)	35(44)	39(48)

Notes:

1. Capacities are based on the following conditions:
   Cooling: - Indoor Temperature 27°C(80.6°F) DB/19°C(66.2°F) WB
   - Outdoor Temperature 35°C(95°F) DB/24°C(75.2°F) WB
   Heating: - Indoor Temperature 20°C(68°F) DB/15°C(59°F) WB
   - Outdoor Temperature 7°C(44.6°F) DB/6°C(42.8°F) WB
   Piping Length: - Interconnecting Piping Length 7.5m
   - Level Difference of Zero
2. Capacities are net capacity
3. EEV : Electronic Expansion Valve
4. Wiring cable size must comply with the applicable local and national code.
5. Due to our policy of innovation some specifications may be changed without prior notification

Conversion Formula
RT = kW x 0.284
kcal/h = kW x 860
Btu/h = kW x 3412
cfm = m^3/min x 35.3

HP			26	28	30
Model Name	Combination Unit		ARUM261LTE5	ARUM280LTE5	ARUM300LTE5
	Independent Unit		ARUM140LTE5	ARUM160LTE5	ARUM180LTE5
			ARUM120LTE5	ARUM120LTE5	ARUM120LTE5
Capacity	Cooling (Total)	kW	72.8	78.4	84.0
		Btu/h	248,400	267,500	286,600
	Cooling (Net/Rated)	kW	70.8	76.8	81.5
		Btu/h	241,600	262,100	278,100
	Heating (Total)	kW	81.9	88.2	94.5
		Btu/h	279,400	300,900	322,400
	Heating (Net/Rated)	kW	71.3	76.6	82.8
		Btu/h	243,300	261,400	282,600
Power Input	Cooling (Total)	kW	16.26	18.47	18.49
	Heating (Total)	kW	17.98	20.65	20.20
EER	Total		4.48	4.24	4.54
	Net		3.85	3.55	3.84
COP	Total		4.56	4.27	4.68
	Net		4.07	3.72	4.22
Power Factor	Rated	-	0.93	0.93	0.93
Heat Exchanger			Wide Louver Puls	Wide Louver Puls	Wide Louver Puls
Exterior	Color		Morning Gray / Dawn Gray	Morning Gray / Dawn Gray	Morning Gray / Dawn Gray
	RAL code		RAL 7030 / 7037	RAL 7030 / 7037	RAL 7030 / 7037
Compressor	Type		Hermetically Sealed Scroll	Hermetically Sealed Scroll	Hermetically Sealed Scroll
	Piston Displacement	cm^3/rev	62.1 × 2	62.1 × 2	(62.1 × 2) + (43.8 × 1)
	Number of Revolution	rev/min	3,600 × 2	3,600 × 2	3,600 × 3
	Motor Output × Number	W × No.	5,300 × 2	5,300 × 2	(5,300 × 2) + (4,200 × 1)
	Starting Method		Inverter	Inverter	Inverter
	Oil Type		FW68D(PVE)	FW68D(PVE)	FW68D(PVE)
Fan	Type		Propeller fan	Propeller fan	Propeller fan
	Motor Output × Number	W	(900 × 2) + (1,200 × 1)	(900 × 2) + (1,200 × 1)	(900 × 2) + (1,200 × 1)
	Air Flow Rate(High)	m^3/min	(320 × 1) + (240 × 1)	(320 × 1) + (240 × 1)	(320 × 1) + (240 × 1)
		ft^3/min	(11,301 × 1) + (8,476 × 1)	(11,301 × 1) + (8,476 × 1)	(11,301 × 1) + (8,476 × 1)
	External Static Perssure	Max., Pa	80	80	80
	Drive		DC INVERTER	DC INVERTER	DC INVERTER
	Discharge	Side / Top	TOP	TOP	TOP
Pipe Connections #1	Liquid Pipe	mm(inch)	19.05(3/4)	19.05(3/4)	19.05(3/4)
	Low Pressure Gas Pipe	mm(inch)	34.9(1-3/8)	34.9(1-3/8)	34.9(1-3/8)
	High Pressure Gas Pipe	mm(inch)	28.58(1-1/8)	28.58(1-1/8)	28.58(1-1/8)
Pipe Connections #2	Liquid Pipe	mm(inch)	19.05(3/4)	19.05(3/4)	19.05(3/4)
	Gas Pipe	mm(inch)	34.9(1-3/8)	34.9(1-3/8)	34.9(1-3/8)
Dimensions(W × H × D)		mm	(1,240 × 1,690 × 760) × 1 + (930 × 1,690 × 760) × 1	(1,240 × 1,690 × 760) × 1 + (930 × 1,690 × 760) × 1	(1,240 × 1,690 × 760) × 1 + (930 × 1,690 × 760) × 1
		inch	(48-13/16 x 66-17/32 x 29-29/32) x 1 + (36-5/8 x 66-17/32 x 29-29/32) x 1	(48-13/16 x 66-17/32 x 29-29/32) x 1 + (36-5/8 x 66-17/32 x 29-29/32) x 1	(48-13/16 x 66-17/32 x 29-29/32) x 1 + (36-5/8 x 66-17/32 x 29-29/32) x 1
Net Weight		kg	(242 x 1) + (215 × 1)	(242 x 1) + (215 × 1)	(300 × 1) + (215 × 1)
		lbs	(534 x 1) + (474 × 1)	(534 x 1) + (474 × 1)	(661 × 1) + (474 × 1)
Sound Pressure Level	Cooling	dB(A)	62.5	62.8	63.1
	Heating	dB(A)	63.5	63.8	64.1
Sound Power Level	Cooling	dB(A)	90.8	91.5	93.0
	Heating	dB(A)	94.5	95.2	96.0
Protection Devices	High pressure protection	-	High pressure sensor / High pressure switch		
	Compressor/Fan	-	Over-heat protection / Fan driver overload protector		
	Inverter	-	Over-heat protection / Over-current protection		
Communication Cable (VCTF-SB)		No.xmm^2	2C × 1.0 ~ 1.5	2C × 1.0 ~ 1.5	2C × 1.0 ~ 1.5
Refigerant	Refrigerant name		R410A	R410A	R410A
	Precharged Amount	kg	23.0	23.0	25.5
		lbs	50.7	50.7	56.2
	t-CO2 eq		48.0	48.0	53.2
	Control		Electronic Expansion Valve	Electronic Expansion Valve	Electronic Expansion Valve
Power Supply		Ø , V, Hz	380~415, 3, 50	380~415, 3, 50	380~415, 3, 50
			380, 3, 60	380, 3, 60	380, 3, 60
Number of maximum connectable indoor units ***			42(52)	45(56)	49(60)

Notes:

1. Capacities are based on the following conditions:
   Cooling: - Indoor Temperature 27°C(80.6°F) DB/19°C(66.2°F) WB
   - Outdoor Temperature 35°C(95°F) DB/24°C(75.2°F) WB
   Heating: - Indoor Temperature 20°C(68°F) DB/15°C(59°F) WB
   - Outdoor Temperature 7°C(44.6°F) DB/6°C(42.8°F) WB
   Piping Length: - Interconnecting Piping Length 7.5m
   - Level Difference of Zero
2. Capacities are net capacity
3. EEV : Electronic Expansion Valve
4. Wiring cable size must comply with the applicable local and national code.
5. Due to our policy of innovation some specifications may be changed without prior notification

Conversion Formula
RT = kW x 0.284
kcal/h = kW x 860
Btu/h = kW x 3412
cfm = m^3/min x 35.3

Specifications (For Australia)

HP			32	34	36
Model Name	Combination Unit		ARUM320LTE5	ARUM340LTE5	ARUM360LTE5
	Independent Unit		ARUM200LTE5	ARUM220LTE5	ARUM240LTE5
			ARUM120LTE5	ARUM120LTE5	ARUM120LTE5
Capacity	Cooling (Total)	kW	89.6	95.2	100.8
		Btu/h	305,700	324,800	343,900
	Cooling (Net/Rated)	kW	87.3	92.5	98.5
		Btu/h	297,900	315,700	336,100
	Heating (Total)	kW	100.8	107.1	112.1
		Btu/h	343,900	365,400	382,300
	Heating (Net/Rated)	kW	88.8	92.8	98.6
		Btu/h	303,000	316,700	336,500
Power Input	Cooling (Total)	kW	20.35	23.28	24.98
	Heating (Total)	kW	22.95	25.02	27.06
EER	Total		4.40	4.09	4.04
	Net		3.75	3.52	3.51
COP	Total		4.39	4.28	4.14
	Net		4.04	3.95	4.26
Power Factor	Rated	-	0.93	0.93	0.93
Heat Exchanger			Wide Louver Puls	Wide Louver Puls	Wide Louver Puls
Exterior	Color		Morning Gray / Dawn Gray	Morning Gray / Dawn Gray	Morning Gray / Dawn Gray
	RAL code		RAL 7030 / 7037	RAL 7030 / 7037	RAL 7030 / 7037
Compressor	Type		Hermetically Sealed Scroll	Hermetically Sealed Scroll	Hermetically Sealed Scroll
	Piston Displacement	cm^3/rev	(62.1 × 2) + (43.8 × 1)	(62.1 × 2) + (43.8 × 1)	62.1 × 3
	Number of Revolution	rev/min	3,600 × 3	3,600 × 3	3,600 × 3
	Motor Output x Number	W × No.	(5,300 × 2) + (4,200 × 1)	(5,300 × 2) + (4,200 × 1)	5,300 × 3
	Starting Method		Inverter	Inverter	Inverter
	Oil Type		FW68D(PVE)	FW68D(PVE)	FW68D(PVE)
Fan	Type		Propeller fan	Propeller fan	Propeller fan
	Motor Output x Number	W	(900 × 2) + (1,200 × 1)	(900 × 2) + (1,200 × 1)	(900 × 2) + (1,200 × 1)
	Air Flow Rate(High)	m^3/min	(320 × 1) + (240 × 1)	(320 × 1) + (240 × 1)	(320 × 1) + (240 × 1)
		ft^3/min	(11,301 × 1) + (8,476 × 1)	(11,301 × 1) + (8,476 × 1)	(11,301 × 1) + (8,476 × 1)
	External Static Perssure	Max., Pa	80	80	80
	Drive		DC INVERTER	DC INVERTER	DC INVERTER
	Discharge	Side / Top	TOP	TOP	TOP
Pipe Connections #1	Liquid Pipe	mm(inch)	19.05(3/4)	19.05(3/4)	19.05(3/4)
	Low Pressure Gas Pipe	mm(inch)	34.9(1-3/8)	34.9(1-3/8)	41.3(1-5/8)
	High Pressure Gas Pipe	mm(inch)	28.58(1-1/8)	28.58(1-1/8)	28.58(1-1/8)
Pipe Connections #2	Liquid Pipe	mm(inch)	19.05(3/4)	19.05(3/4)	19.05(3/4)
	Gas Pipe	mm(inch)	34.9(1-3/8)	34.9(1-3/8)	41.3(1-5/8)
Dimensions(W × H × D)		mm	(1,240 × 1,690 × 760) × 1 + (930 × 1,690 × 760) × 1	(1,240 × 1,690 × 760) × 1 + (930 × 1,690 × 760) × 1	(1,240 × 1,690 × 760) × 1 + (930 × 1,690 × 760) × 1
		inch	(48-13/16 x 66-17/32 x 29-29/32) x 1 + (36-5/8 x 66-17/32 x 29-29/32) x 1	(48-13/16 x 66-17/32 x 29-29/32) x 1 + (36-5/8 x 66-17/32 x 29-29/32) x 1	(48-13/16 x 66-17/32 x 29-29/32) x 1 + (36-5/8 x 66-17/32 x 29-29/32) x 1
Net Weight		kg	(300 × 1) + (215 × 1)	(300 × 1) + (215 × 1)	(310 × 1) + (215 × 1)
		lbs	(661 × 1) + (474 × 1)	(661 × 1) + (474 × 1)	(683 × 1) + (474 × 1)
Sound Pressure Level	Cooling	dB(A)	63.8	65.6	66.0
	Heating	dB(A)	65.8	66.6	67.8
Sound Power Level	Cooling	dB(A)	93.8	93.8	95.5
	Heating	dB(A)	96.8	97.6	99.4
Protection Devices	High pressure protection	-	High pressure sensor / High pressure switch		
	Compressor/Fan	-	Over-heat protection / Fan driver overload protector		
	Inverter	-	Over-heat protection / Over-current protection		
Communication Cable (VCTF-SB)		No.xmm^2	2C × 1.0 ~ 1.5	2C × 1.0 ~ 1.5	2C × 1.0 ~ 1.5
Refigerant	Refrigerant name		R410A	R410A	R410A
	Precharged Amount	kg	25.5	25.5	26.5
		lbs	56.2	56.2	58.4
	t-CO2 eq		53.2	53.2	55.3
	Control		Electronic Expansion Valve	Electronic Expansion Valve	Electronic Expansion Valve
Power Supply		Ø , V, Hz	380~415, 3, 50	380~415, 3, 50	380~415, 3, 50
			380, 3, 60	380, 3, 60	380, 3, 60
Number of maximum connectable indoor units ***			52(64)	55(64)	58(64)

Notes:

1. Capacities are based on the following conditions:
   Cooling: - Indoor Temperature 27°C(80.6°F) DB/19°C(66.2°F) WB
   - Outdoor Temperature 35°C(95°F) DB/24°C(75.2°F) WB
   Heating: - Indoor Temperature 20°C(68°F) DB/15°C(59°F) WB
   - Outdoor Temperature 7°C(44.6°F) DB/6°C(42.8°F) WB
   Piping Length: - Interconnecting Piping Length 7.5m
   - Level Difference of Zero
2. Capacities are net capacity
3. EEV : Electronic Expansion Valve
4. Wiring cable size must comply with the applicable local and national code.
5. Due to our policy of innovation some specifications may be changed without prior notification

Conversion Formula
RT = kW x 0.284
kcal/h = kW x 860
Btu/h = kW x 3412
cfm = m^3/min x 35.3

HP			38	40	42
Model Name	Combination Unit		ARUM380LTE5	ARUM400LTE5	ARUM420LTE5
	Independent Unit		ARUM240LTE5	ARUM240LTE5	ARUM240LTE5
			ARUM140LTE5	ARUM160LTE5	ARUM180LTE5
Capacity	Cooling (Total)	kW	106.4	112.0	117.6
		Btu/h	363,000	382,100	401,300
	Cooling (Net/Rated)	kW	104.3	110.3	115.0
		Btu/h	355,900	376,400	392,400
	Heating (Total)	kW	118.4	124.7	131.0
		Btu/h	403,800	425,300	446,800
	Heating (Net/Rated)	kW	103.3	108.6	114.8
		Btu/h	352,500	370,600	391,700
Power Input	Cooling (Total)	kW	26.08	28.29	28.31
	Heating (Total)	kW	28.52	31.19	30.74
EER	Total		4.08	3.96	4.15
	Net		3.50	3.33	3.52
COP	Total		4.15	4.00	4.26
	Net		4.20	3.92	4.30
Power Factor	Rated	-	0.93	0.93	0.93
Heat Exchanger			Wide Louver Puls	Wide Louver Puls	Wide Louver Puls
Exterior	Color		Morning Gray / Dawn Gray	Morning Gray / Dawn Gray	Morning Gray / Dawn Gray
	RAL code		RAL 7030 / 7037	RAL 7030 / 7037	RAL 7030 / 7037
Compressor	Type		Hermetically Sealed Scroll	Hermetically Sealed Scroll	Hermetically Sealed Scroll
	Piston Displacement	cm^3/rev	62.1 × 3	62.1 × 3	(62.1 × 3) + (43.8 × 1)
	Number of Revolution	rev/min	3,600 × 3	3,600 × 3	3,600 × 4
	Motor Output x Number	W × No.	5,300 × 3	5,300 × 3	(5,300 × 3) + (4,200 × 1)
	Starting Method		Inverter	Inverter	Inverter
	Oil Type		FW68D(PVE)	FW68D(PVE)	FW68D(PVE)
Fan	Type		Propeller fan	Propeller fan	Propeller fan
	Motor Output x Number	W	900 × 4	900 × 4	900 × 4
	Air Flow Rate(High)	m^3/min	320 × 2	320 × 2	320 × 2
		ft^3/min	11,301 × 2	11,301 × 2	11,301 × 2
	External Static Perssure	Max., Pa	80	80	80
	Drive		DC INVERTER	DC INVERTER	DC INVERTER
	Discharge	Side / Top	TOP	TOP	TOP
Pipe Connections #1	Liquid Pipe	mm(inch)	19.05(3/4)	19.05(3/4)	19.05(3/4)
	Low Pressure Gas Pipe	mm(inch)	41.3(1-5/8)	41.3(1-5/8)	41.3(1-5/8)
	High Pressure Gas Pipe	mm(inch)	34.9(1-3/8)	34.9(1-3/8)	34.9(1-3/8)
Pipe Connections #2	Liquid Pipe	mm(inch)	19.05(3/4)	19.05(3/4)	19.05(3/4)
	Gas Pipe	mm(inch)	41.3(1-5/8)	41.3(1-5/8)	41.3(1-5/8)
Dimensions(W × H × D)		mm	(1,240 ×1,690 × 760) × 2	(1,240 ×1,690 × 760) × 2	(1,240 ×1,690 × 760) × 2
		inch	(48-13/16 × 66-17/32 × 29-29/32) × 2	(48-13/16 × 66-17/32 × 29-29/32) × 2	(48-13/16 × 66-17/32 × 29-29/32) × 2
Net Weight		kg	(310 × 1) + (242 x 1)	(310 × 1) + (242 x 1)	(310 × 1) + (300 × 1)
		lbs	(683 × 1) + (534 x 1)	(683 × 1) + (534 x 1)	(683 × 1) + (661 × 1)
Sound Pressure Level	Cooling	dB(A)	66.2	66.3	66.5
	Heating	dB(A)	68.0	68.1	68.2
Sound Power Level	Cooling	dB(A)	96.0	96.2	96.8
	Heating	dB(A)	100.0	100.2	100.5
Protection Devices	High pressure protection	-	High pressure sensor / High pressure switch		
	Compressor/Fan	-	Over-heat protection / Fan driver overload protector		
	Inverter	-	Over-heat protection / Over-current protection		
Communication Cable (VCTF-SB)		No.xmm^2	2C × 1.0 ~ 1.5	2C × 1.0 ~ 1.5	2C × 1.0 ~ 1.5
Refigerant	Refrigerant name		R410A	R410A	R410A
	Precharged Amount	kg	30.5	30.5	33.0
		lbs	67.2	67.2	72.8
	t-CO2 eq		63.7	63.7	68.9
	Control		Electronic Expansion Valve	Electronic Expansion Valve	Electronic Expansion Valve
Power Supply		Ø , V, Hz	380~415, 3, 50	380~415, 3, 50	380~415, 3, 50
			380, 3, 60	380, 3, 60	380, 3, 60
Number of maximum connectable indoor units ***			61(64)	64	64

Notes:

1. Capacities are based on the following conditions:
   Cooling: - Indoor Temperature 27°C(80.6°F) DB/19°C(66.2°F) WB
   - Outdoor Temperature 35°C(95°F) DB/24°C(75.2°F) WB
   Heating: - Indoor Temperature 20°C(68°F) DB/15°C(59°F) WB
   - Outdoor Temperature 7°C(44.6°F) DB/6°C(42.8°F) WB
   Piping Length: - Interconnecting Piping Length 7.5m
   - Level Difference of Zero
2. Capacities are net capacity
3. EEV : Electronic Expansion Valve
4. Wiring cable size must comply with the applicable local and national code.
5. Due to our policy of innovation some specifications may be changed without prior notification

Conversion Formula
RT = kW x 0.284
kcal/h = kW x 860
Btu/h = kW x 3412
cfm = m^3/min x 35.3

Specifications (For Australia)

HP			44	46	48
Model Name	Combination Unit		ARUM440LTE5	ARUM460LTE5	ARUM480LTE5
	Independent Unit		ARUM240LTE5	ARUM240LTE5	ARUM240LTE5
			ARUM200LTE5	ARUM220LTE5	ARUM240LTE5
Capacity	Cooling (Total)	kW	123.2	128.8	134.4
		Btu/h	420,400	439,500	458,600
	Cooling (Net/Rated)	kW	120.8	126.0	132.0
		Btu/h	412,200	430,000	450,400
	Heating (Total)	kW	137.3	143.6	148.5
		Btu/h	468,300	489,800	506,700
	Heating (Net/Rated)	kW	120.8	124.8	130.6
		Btu/h	412,200	425,900	445,700
Power Input	Cooling (Total)	kW	30.17	33.10	34.80
	Heating (Total)	kW	33.49	35.56	37.60
EER	Total		4.08	3.89	3.86
	Net		3.48	3.34	3.34
COP	Total		4.10	4.04	3.95
	Net		4.15	4.07	4.32
Power Factor	Rated	-	0.93	0.93	0.93
Heat Exchanger			Wide Louver Puls	Wide Louver Puls	Wide Louver Puls
Exterior	Color		Morning Gray / Dawn Gray	Morning Gray / Dawn Gray	Morning Gray / Dawn Gray
	RAL code		RAL 7030 / 7037	RAL 7030 / 7037	RAL 7030 / 7037
Compressor	Type		Hermetically Sealed Scroll	Hermetically Sealed Scroll	Hermetically Sealed Scroll
	Piston Displacement	cm^3/rev	(62.1 × 3) + (43.8 × 1)	(62.1 × 3) + (43.8 × 1)	62.1 × 4
	Number of Revolution	rev/min	3,600 × 4	3,600 × 4	3,600 × 4
	Motor Output x Number	W × No.	(5,300 × 3) + (4,200 × 1)	(5,300 × 3) + (4,200 × 1)	5,300 × 4
	Starting Method		Inverter	Inverter	Inverter
	Oil Type		FW68D(PVE)	FW68D(PVE)	FW68D(PVE)
Fan	Type		Propeller fan	Propeller fan	Propeller fan
	Motor Output x Number	W	900 × 4	900 × 4	900 × 4
	Air Flow Rate(High)	m^3/min	320 × 2	320 × 2	320 × 2
		ft^3/min	11,301 × 2	11,301 × 2	11,301 × 2
	External Static Perssure	Max., Pa	80	80	80
	Drive		DC INVERTER	DC INVERTER	DC INVERTER
	Discharge	Side / Top	TOP	TOP	TOP
Pipe Connections #1	Liquid Pipe	mm(inch)	19.05(3/4)	19.05(3/4)	19.05(3/4)
	Low Pressure Gas Pipe	mm(inch)	41.3(1-5/8)	41.3(1-5/8)	41.3(1-5/8)
	High Pressure Gas Pipe	mm(inch)	34.9(1-3/8)	34.9(1-3/8)	34.9(1-3/8)
Pipe Connections #2	Liquid Pipe	mm(inch)	19.05(3/4)	19.05(3/4)	19.05(3/4)
	Gas Pipe	mm(inch)	41.3(1-5/8)	41.3(1-5/8)	41.3(1-5/8)
Dimensions(W × H × D)		mm	(1,240 ×1,690 × 760) × 2	(1,240 ×1,690 × 760) × 2	(1,240 ×1,690 × 760) × 2
		inch	(48-13/16 × 66-17/32 × 29-29/32) × 2	(48-13/16 × 66-17/32 × 29-29/32) × 2	(48-13/16 × 66-17/32 × 29-29/32) × 2
Net Weight		kg	(310 × 1) + (300 × 1)	(310 × 1) + (300 × 1)	310 × 2
		lbs	(683 × 1) + (661 × 1)	(683 × 1) + (661 × 1)	683 × 2
Sound Pressure Level	Cooling	dB(A)	66.8	67.8	68.0
	Heating	dB(A)	68.9	69.3	70.0
Sound Power Level	Cooling	dB(A)	97.1	97.1	98.0
	Heating	dB(A)	100.8	101.1	102.0
Protection Devices	High pressure protection	-	High pressure sensor / High pressure switch		
	Compressor/Fan	-	Over-heat protection / Fan driver overload protector		
	Inverter	-	Over-heat protection / Over-current protection		
Communication Cable (VCTF-SB)		No.xmm^2	2C × 1.0 ~ 1.5	2C × 1.0 ~ 1.5	2C × 1.0 ~ 1.5
Refigerant	Refrigerant name		R410A	R410A	R410A
	Precharged Amount	kg	33.0	33.0	34.0
		lbs	72.8	72.8	75.0
	t-CO2 eq		68.9	68.9	71.0
	Control		Electronic Expansion Valve	Electronic Expansion Valve	Electronic Expansion Valve
Power Supply		Ø , V, Hz	380~415, 3, 50	380~415, 3, 50	380~415, 3, 50
			380, 3, 60	380, 3, 60	380, 3, 60
Number of maximum connectable indoor units ***			64	64	64

Notes:

1. Capacities are based on the following conditions:
   Cooling: - Indoor Temperature 27°C(80.6°F) DB/19°C(66.2°F) WB
   - Outdoor Temperature 35°C(95°F) DB/24°C(75.2°F) WB
   Heating: - Indoor Temperature 20°C(68°F) DB/15°C(59°F) WB
   - Outdoor Temperature 7°C(44.6°F) DB/6°C(42.8°F) WB
   Piping Length: - Interconnecting Piping Length 7.5m
   - Level Difference of Zero
2. Capacities are net capacity
3. EEV : Electronic Expansion Valve
4. Wiring cable size must comply with the applicable local and national code.
5. Due to our policy of innovation some specifications may be changed without prior notification

Conversion Formula
RT = kW x 0.284
kcal/h = kW x 860
Btu/h = kW x 3412
cfm = m^3/min x 35.3

HP			50	52	54
Model Name	Combination Unit		ARUM500LTE5	ARUM520LTE5	ARUM540LTE5
	Independent Unit		ARUM240LTE5	ARUM240LTE5	ARUM240LTE5
			ARUM140LTE5	ARUM160LTE5	ARUM180LTE5
			ARUM120LTE5	ARUM120LTE5	ARUM120LTE5
Capacity	Cooling (Total)	kW	140.0	145.6	151.2
		Btu/h	477,700	496,800	515,900
	Cooling (Net/Rated)	kW	136.8	142.8	147.5
		Btu/h	466,800	487,300	503,300
	Heating (Total)	kW	156.2	162.5	168.8
		Btu/h	532,800	554,300	575,800
	Heating (Net/Rated)	kW	136.6	141.9	148.1
		Btu/h	466,100	484,200	505,400
Power Input	Cooling (Total)	kW	33.66	35.87	35.89
	Heating (Total)	kW	36.78	39.45	39.00
EER	Total		4.16	4.06	4.21
	Net		3.58	3.45	3.60
COP	Total		4.25	4.12	4.33
	Net		4.19	3.97	4.27
Power Factor	Rated	-	0.93	0.93	0.93
Heat Exchanger			Wide Louver Puls	Wide Louver Puls	Wide Louver Puls
Exterior	Color		Morning Gray / Dawn Gray	Morning Gray / Dawn Gray	Morning Gray / Dawn Gray
	RAL code		RAL 7030 / 7037	RAL 7030 / 7037	RAL 7030 / 7037
Compressor	Type		Hermetically Sealed Scroll	Hermetically Sealed Scroll	Hermetically Sealed Scroll
	Piston Displacement	cm^3/rev	62.1 × 4	62.1 × 4	(62.1 × 4) + (43.8 × 1)
	Number of Revolution	rev/min	3,600 × 4	3,600 × 4	3,600 × 5
	Motor Output × Number	W × No.	5,300 × 4	5,300 × 4	(5,300 × 4) + (4,200 × 1)
	Starting Method		Inverter	Inverter	Inverter
	Oil Type		FW68D(PVE)	FW68D(PVE)	FW68D(PVE)
Fan	Type		Propeller fan	Propeller fan	Propeller fan
	Motor Output × Number	W	(900 × 4) + (1,200 × 1)	(900 × 4) + (1,200 × 1)	(900 × 4) + (1,200 × 1)
	Air Flow Rate(High)	m^3/min	(320 × 2) + (240 × 1)	(320 × 2) + (240 × 1)	(320 × 2) + (240 × 1)
		ft^3/min	(11,301 × 2) + (8,476 × 1)	(11,301 × 2) + (8,476 × 1)	(11,301 × 2) + (8,476 × 1)
	External Static Perssure	Max., Pa	80	80	80
	Drive		DC INVERTER	DC INVERTER	DC INVERTER
	Discharge	Side / Top	TOP	TOP	TOP
Pipe Connections #1	Liquid Pipe	mm(inch)	19.05(3/4)	19.05(3/4)	19.05(3/4)
	Low Pressure Gas Pipe	mm(inch)	41.3(1-5/8)	41.3(1-5/8)	41.3(1-5/8)
	High Pressure Gas Pipe	mm(inch)	34.9(1-3/8)	34.9(1-3/8)	34.9(1-3/8)
Pipe Connections #2	Liquid Pipe	mm(inch)	19.05(3/4)	19.05(3/4)	19.05(3/4)
	Gas Pipe	mm(inch)	41.3(1-5/8)	41.3(1-5/8)	41.3(1-5/8)
Dimensions(W × H × D)		mm	(1,240 × 1,690 × 760) × 2 + (930 × 1,690 × 760) × 1	(1,240 × 1,690 × 760) × 2 + (930 × 1,690 × 760) × 1	(1,240 × 1,690 × 760) × 2 + (930 × 1,690 × 760) × 1
		inch	(48-13/16 × 66-17/32 × 29-29/32) × 2 + (36-5/8 × 66-17/32 × 29-29/32) × 1	(48-13/16 × 66-17/32 × 29-29/32) × 2 + (36-5/8 × 66-17/32 × 29-29/32) × 1	(48-13/16 × 66-17/32 × 29-29/32) × 2 + (36-5/8 × 66-17/32 × 29-29/32) × 1
Net Weight		kg	(310 × 1) + (242 × 1) + (215 × 1)	(310 × 1) + (242 × 1) + (215 × 1)	(310 × 1) + (300 × 1) + (215 × 1)
		lbs	(683 × 1) + (534 × 1) + (474 × 1)	(683 × 1) + (534 × 1) + (474 × 1)	(683 × 1) + (661 × 1) + (474 × 1)
Sound Pressure Level	Cooling	dB(A)	67.0	67.1	67.2
	Heating	dB(A)	68.6	68.7	68.8
Sound Power Level	Cooling	dB(A)	96.4	96.6	97.1
	Heating	dB(A)	100.3	100.5	100.8
Protection Devices	High pressure protection	-	High pressure sensor / High pressure switch		
	Compressor/Fan	-	Over-heat protection / Fan driver overload protector		
	Inverter	-	Over-heat protection / Over-current protection		
Communication Cable (VCTF-SB)		No.xmm^2	2C × 1.0 ~ 1.5	2C × 1.0 ~ 1.5	2C × 1.0 ~ 1.5
Refigerant	Refrigerant name		R410A	R410A	R410A
	Precharged Amount	kg	40.0	40.0	42.5
		lbs	88.2	88.2	93.7
	t-CO2 eq		83.5	83.5	88.7
	Control		Electronic Expansion Valve	Electronic Expansion Valve	Electronic Expansion Valve
Power Supply		Ø , V, Hz	380~415, 3, 50	380~415, 3, 50	380~415, 3, 50
			380, 3, 60	380, 3, 60	380, 3, 60
Number of maximum connectable indoor units ***			64	64	64

Notes:

1. Capacities are based on the following conditions:
   Cooling: - Indoor Temperature 27°C(80.6°F) DB/19°C(66.2°F) WB
   - Outdoor Temperature 35°C(95°F) DB/24°C(75.2°F) WB
   Heating: - Indoor Temperature 20°C(68°F) DB/15°C(59°F) WB
   - Outdoor Temperature 7°C(44.6°F) DB/6°C(42.8°F) WB
   Piping Length: - Interconnecting Piping Length 7.5m
   - Level Difference of Zero
2. Capacities are net capacity
3. EEV : Electronic Expansion Valve
4. Wiring cable size must comply with the applicable local and national code.
5. Due to our policy of innovation some specifications may be changed without prior notification

Conversion Formula
RT = kW x 0.284
kcal/h = kW x 860
Btu/h = kW x 3412
cfm = m^3/min x 35.3

HP			56	58	60
Model Name	Combination Unit		ARUM560LTE5	ARUM580LTE5	ARUM600LTE5
	Independent Unit		ARUM240LTE5	ARUM240LTE5	ARUM240LTE5
			ARUM200LTE5	ARUM220LTE5	ARUM240LTE5
			ARUM120LTE5	ARUM120LTE5	ARUM120LTE5
Capacity	Cooling (Total)	kW	156.8	162.4	168.0
		Btu/h	535,000	554,100	573,200
	Cooling (Net/Rated)	kW	153.3	158.5	164.5
		Btu/h	523,100	540,900	561,300
	Heating (Total)	kW	175.1	181.4	186.3
		Btu/h	597,300	618,800	635,700
	Heating (Net/Rated)	kW	154.1	158.1	163.9
		Btu/h	525,800	539,500	559,300
Power Input	Cooling (Total)	kW	37.75	40.68	42.38
	Heating (Total)	kW	41.75	43.82	45.86
EER	Total		4.15	3.99	3.96
	Net		3.56	3.44	3.44
COP	Total		4.19	4.14	4.06
	Net		4.15	4.09	4.29
Power Factor	Rated	-	0.93	0.93	0.93
Heat Exchanger			Wide Louver Puls	Wide Louver Puls	Wide Louver Puls
Exterior	Color		Morning Gray / Dawn Gray	Morning Gray / Dawn Gray	Morning Gray / Dawn Gray
	RAL code		RAL 7030 / 7037	RAL 7030 / 7037	RAL 7030 / 7037
Compressor	Type		Hermetically Sealed Scroll	Hermetically Sealed Scroll	Hermetically Sealed Scroll
	Piston Displacement	cm^3/rev	(62.1 × 4) + (43.8 × 1)	(62.1 × 4) + (43.8 × 1)	62.1 × 5
	Number of Revolution	rev/min	3,600 × 5	3,600 × 5	3,600 × 5
	Motor Output × Number	W × No.	(5,300 × 4) + (4,200 × 1)	(5,300 × 4) + (4,200 × 1)	5,300 × 5
	Starting Method		Inverter	Inverter	Inverter
	Oil Type		FW68D(PVE)	FW68D(PVE)	FW68D(PVE)
Fan	Type		Propeller fan	Propeller fan	Propeller fan
	Motor Output × Number	W	(900 × 4) + (1,200 × 1)	(900 × 4) + (1,200 × 1)	(900 × 4) + (1,200 × 1)
	Air Flow Rate(High)	m^3/min	(320 × 2) + (240 × 1)	(320 × 2) + (240 × 1)	(320 × 2) + (240 × 1)
		ft^3/min	(11,301 × 2) + (8,476 × 1)	(11,301 × 2) + (8,476 × 1)	(11,301 × 2) + (8,476 × 1)
	External Static Perssure	Max., Pa	80	80	80
	Drive		DC INVERTER	DC INVERTER	DC INVERTER
	Discharge	Side / Top	TOP	TOP	TOP
Pipe Connections #1	Liquid Pipe	mm(inch)	19.05(3/4)	19.05(3/4)	19.05(3/4)
	Low Pressure Gas Pipe	mm(inch)	41.3(1-5/8)	41.3(1-5/8)	41.3(1-5/8)
	High Pressure Gas Pipe	mm(inch)	34.9(1-3/8)	34.9(1-3/8)	34.9(1-3/8)
Pipe Connections #2	Liquid Pipe	mm(inch)	19.05(3/4)	19.05(3/4)	19.05(3/4)
	Gas Pipe	mm(inch)	41.3(1-5/8)	41.3(1-5/8)	41.3(1-5/8)
Dimensions(W × H × D)		mm	(1,240 x 1,690 x 760) x 2 + (930 x 1,690 x 760) x 1	(1,240 x 1,690 x 760) x 2 + (930 x 1,690 x 760) x 1	(1,240 x 1,690 x 760) x 2 + (930 x 1,690 x 760) x 1
		inch	(48-13/16 x 66-17/32 x 29-29/32) x 2 + (36-5/8 x 66-17/32 x 29-29/32) x 1	(48-13/16 x 66-17/32 x 29-29/32) x 2 + (36-5/8 x 66-17/32 x 29-29/32) x 1	(48-13/16 x 66-17/32 x 29-29/32) x 2 + (36-5/8 x 66-17/32 x 29-29/32) x 1
Net Weight		kg	(310 x 1) + (300 x 1) + (215 x 1)	(310 x 1) + (300 x 1) + (215 x 1)	(310 x 2) + (215 x 1)
		lbs	(683 x 1) + (661 x 1) + (474 x 1)	(683 x 1) + (661 x 1) + (474 x 1)	(683 x 2) + (474 x 1)
Sound Pressure Level	Cooling	dB(A)	67.4	68.3	68.5
	Heating	dB(A)	69.5	69.8	70.4
Sound Power Level	Cooling	dB(A)	97.4	97.4	98.3
	Heating	dB(A)	101.0	101.4	102.2
Protection Devices	High pressure protection	-	High pressure sensor / High pressure switch		
	Compressor/Fan	-	Over-heat protection / Fan driver overload protector		
	Inverter	-	Over-heat protection / Over-current protection		
Communication Cable (VCTF-SB)		No.xmm^2	2C × 1.0 ~ 1.5	2C × 1.0 ~ 1.5	2C × 1.0 ~ 1.5
Refigerant	Refrigerant name		R410A	R410A	R410A
	Precharged Amount	kg	42.5	42.5	43.5
		lbs	93.7	93.7	95.9
	t-CO2 eq		88.7	88.7	90.8
	Control		Electronic Expansion Valve	Electronic Expansion Valve	Electronic Expansion Valve
Power Supply		Ø , V, Hz	380~415, 3, 50	380~415, 3, 50	380~415, 3, 50
			380, 3, 60	380, 3, 60	380, 3, 60
Number of maximum connectable indoor units ***			64	64	64

Notes:

1. Capacities are based on the following conditions:
   Cooling: - Indoor Temperature 27°C(80.6°F) DB/19°C(66.2°F) WB
   - Outdoor Temperature 35°C(95°F) DB/24°C(75.2°F) WB
   Heating: - Indoor Temperature 20°C(68°F) DB/15°C(59°F) WB
   - Outdoor Temperature 7°C(44.6°F) DB/6°C(42.8°F) WB
   Piping Length: - Interconnecting Piping Length 7.5m
   - Level Difference of Zero
2. Capacities are net capacity
3. EEV : Electronic Expansion Valve
4. Wiring cable size must comply with the applicable local and national code.
5. Due to our policy of innovation some specifications may be changed without prior notification

Conversion Formula
RT = kW x 0.284
kcal/h = kW x 860
Btu/h = kW x 3412
cfm = m^3/min x 35.3

HP			62	64	66
Model Name	Combination Unit		ARUM620LTE5	ARUM640LTE5	ARUM660LTE5
	Independent Unit		ARUM240LTE5	ARUM240LTE5	ARUM240LTE5
			ARUM240LTE5	ARUM240LTE5	ARUM240LTE5
			ARUM140LTE5	ARUM160LTE5	ARUM180LTE5
Capacity	Cooling (Total)	kW	173.6	179.2	184.8
		Btu/h	592,300	611,400	630,500
	Cooling (Net/Rated)	kW	170.3	176.3	181.0
		Btu/h	581,100	601,600	617,600
	Heating (Total)	kW	192.6	198.9	205.2
		Btu/h	657,200	678,700	700,200
	Heating (Net/Rated)	kW	168.6	173.9	180.1
		Btu/h	575,300	593,400	614,600
Power Input	Cooling (Total)	kW	43.48	45.69	45.71
	Heating (Total)	kW	47.32	49.99	49.54
EER	Total		3.99	3.92	4.04
	Net		3.43	3.34	3.45
COP	Total		4.07	3.98	4.14
	Net		4.24	4.06	4.30
Power Factor	Rated	-	0.93	0.93	0.93
Heat Exchanger			Wide Louver Puls	Wide Louver Puls	Wide Louver Puls
Exterior	Color		Morning Gray / Dawn Gray	Morning Gray / Dawn Gray	Morning Gray / Dawn Gray
	RAL code		RAL 7030 / 7037	RAL 7030 / 7037	RAL 7030 / 7037
Compressor	Type		Hermetically Sealed Scroll	Hermetically Sealed Scroll	Hermetically Sealed Scroll
	Piston Displacement	cm^3/rev	62.1 × 5	62.1 × 5	(62.1 × 5) + (43.8 × 1)
	Number of Revolution	rev/min	3,600 × 5	3,600 × 5	3,600 × 6
	Motor Output × Number	W × No.	5,300 × 5	5,300 × 5	(5,300 × 5) + (4,200 × 1)
	Starting Method		Inverter	Inverter	Inverter
	Oil Type		FW68D(PVE)	FW68D(PVE)	FW68D(PVE)
Fan	Type		Propeller fan	Propeller fan	Propeller fan
	Motor Output × Number	W	900 × 6	900 × 6	900 × 6
	Air Flow Rate(High)	m^3/min	320 × 3	320 × 3	320 × 3
		ft^3/min	11,301 × 3	11,301 × 3	11,301 × 3
	External Static Perssure	Max., Pa	80	80	80
	Drive		DC INVERTER	DC INVERTER	DC INVERTER
	Discharge	Side / Top	TOP	TOP	TOP
Pipe Connections #1	Liquid Pipe	mm(inch)	22.2(7/8)	22.2(7/8)	22.2(7/8)
	Low Pressure Gas Pipe	mm(inch)	41.3(1-5/8)	41.3(1-5/8)	53.98(2-1/8)
	High Pressure Gas Pipe	mm(inch)	34.9(1-3/8)	34.9(1-3/8)	41.3(1-5/8)
Pipe Connections #2	Liquid Pipe	mm(inch)	22.2(7/8)	22.2(7/8)	22.2(7/8)
	Gas Pipe	mm(inch)	41.3(1-5/8)	41.3(1-5/8)	53.98(2-1/8)
Dimensions(W × H × D)		mm	(1,240 ×1,690 × 760) × 3	(1,240 ×1,690 × 760) × 3	(1,240 ×1,690 × 760) × 3
		inch	(48-13/16 × 66-17/32 × 29-29/32) × 3	(48-13/16 × 66-17/32 × 29-29/32) × 3	(48-13/16 × 66-17/32 × 29-29/32) × 3
Net Weight		kg	(310 × 2) + (242 × 1)	(310 × 2) + (242 × 1)	(310 × 2) + (300 × 1)
		lbs	(683 × 2) + (534 × 1)	(683 × 2) + (534 × 1)	(683 × 2) + (661 × 1)
Sound Pressure Level	Cooling	dB(A)	68.6	68.7	68.8
	Heating	dB(A)	70.5	70.6	70.6
Sound Power Level	Cooling	dB(A)	98.5	98.6	99.0
	Heating	dB(A)	102.5	102.6	102.8
Protection Devices	High pressure protection	-	High pressure sensor / High pressure switch		
	Compressor/Fan	-	Over-heat protection / Fan driver overload protector		
	Inverter	-	Over-heat protection / Over-current protection		
Communication Cable (VCTF-SB)		No.xmm^2	2C × 1.0 ~ 1.5	2C × 1.0 ~ 1.5	2C × 1.0 ~ 1.5
Refigerant	Refrigerant name		R410A	R410A	R410A
	Precharged Amount	kg	47.5	47.5	50.0
		lbs	104.7	104.7	110.2
	t-CO2 eq		99.2	99.2	104.4
	Control		Electronic Expansion Valve	Electronic Expansion Valve	Electronic Expansion Valve
Power Supply		Ø , V, Hz	380~415, 3, 50	380~415, 3, 50	380~415, 3, 50
			380, 3, 60	380, 3, 60	380, 3, 60
Number of maximum connectable indoor units ***			64	64	64

Notes:

1. Capacities are based on the following conditions:
   Cooling: - Indoor Temperature 27°C(80.6°F) DB/19°C(66.2°F) WB
   - Outdoor Temperature 35°C(95°F) DB/24°C(75.2°F) WB
   Heating: - Indoor Temperature 20°C(68°F) DB/15°C(59°F) WB
   - Outdoor Temperature 7°C(44.6°F) DB/6°C(42.8°F) WB
   Piping Length: - Interconnecting Piping Length 7.5m
   - Level Difference of Zero
2. Capacities are net capacity
3. EEV : Electronic Expansion Valve
4. Wiring cable size must comply with the applicable local and national code.
5. Due to our policy of innovation some specifications may be changed without prior notification

Conversion Formula
RT = kW x 0.284
kcal/h = kW x 860
Btu/h = kW x 3412
cfm = m^3/min x 35.3

Specifications (For Australia)

HP			68	70	72
Model Name	Combination Unit		ARUM680LTE5	ARUM700LTE5	ARUM720LTE5
	Independent Unit		ARUM240LTE5	ARUM240LTE5	ARUM240LTE5
			ARUM240LTE5	ARUM240LTE5	ARUM240LTE5
			ARUM200LTE5	ARUM220LTE5	ARUM240LTE5
Capacity	Cooling (Total)	kW	190.4	196.0	201.6
		Btu/h	649,600	668,800	687,900
	Cooling (Net/Rated)	kW	186.8	192.0	198.0
		Btu/h	637,400	655,200	675,600
	Heating (Total)	kW	211.5	217.8	222.8
		Btu/h	721,700	743,200	760,100
	Heating (Net/Rated)	kW	186.1	190.1	195.9
		Btu/h	635,000	648,700	668,500
Power Input	Cooling (Total)	kW	47.57	50.50	52.20
	Heating (Total)	kW	52.29	54.36	56.40
EER	Total		4.00	3.88	3.86
	Net		3.43	3.34	3.34
COP	Total		4.05	4.01	3.95
	Net		4.21	4.16	4.32
Power Factor	Rated	-	0.93	0.93	0.93
Heat Exchanger			Wide Louver Puls	Wide Louver Puls	Wide Louver Puls
Exterior	Color		Morning Gray / Dawn Gray	Morning Gray / Dawn Gray	Morning Gray / Dawn Gray
	RAL code		RAL 7030 / 7037	RAL 7030 / 7037	RAL 7030 / 7037
Compressor	Type		Hermetically Sealed Scroll	Hermetically Sealed Scroll	Hermetically Sealed Scroll
	Piston Displacement	cm^3/rev	(62.1 × 5) + (43.8 × 1)	(62.1 × 5) + (43.8 × 1)	62.1 × 6
	Number of Revolution	rev/min	3,600 × 6	3,600 × 6	3,600 × 6
	Motor Output × Number	W × No.	(5,300 × 5) + (4,200 × 1)	(5,300 × 5) + (4,200 × 1)	5,300 × 6
	Starting Method		Inverter	Inverter	Inverter
	Oil Type		FW68D(PVE)	FW68D(PVE)	FW68D(PVE)
Fan	Type		Propeller fan	Propeller fan	Propeller fan
	Motor Output × Number	W	900 × 6	900 × 6	900 × 6
	Air Flow Rate(High)	m^3/min	320 × 3	320 × 3	320 × 3
		ft^3/min	11,301 × 3	11,301 × 3	11,301 × 3
	External Static Perssure	Max., Pa	80	80	80
	Drive		DC INVERTER	DC INVERTER	DC INVERTER
	Discharge	Side / Top	TOP	TOP	TOP
Pipe Connections #1	Liquid Pipe	mm(inch)	22.2(7/8)	22.2(7/8)	22.2(7/8)
	Low Pressure Gas Pipe	mm(inch)	53.98(2-1/8)	53.98(2-1/8)	53.98(2-1/8)
	High Pressure Gas Pipe	mm(inch)	41.3(1-5/8)	41.3(1-5/8)	41.3(1-5/8)
Pipe Connections #2	Liquid Pipe	mm(inch)	22.2(7/8)	22.2(7/8)	22.2(7/8)
	Gas Pipe	mm(inch)	53.98(2-1/8)	53.98(2-1/8)	53.98(2-1/8)
Dimensions(W × H × D)		mm	(1,240 ×1,690 × 760) × 3	(1,240 ×1,690 × 760) × 3	(1,240 ×1,690 × 760) × 3
		inch	(48-13/16 × 66-17/32 × 29-29/32) × 3	(48-13/16 × 66-17/32 × 29-29/32) × 3	(48-13/16 × 66-17/32 × 29-29/32) × 3
Net Weight		kg	(310 × 2) + (300 × 1)	(310 × 2) + (300 × 1)	310 × 3
		lbs	(683 × 2) + (661 × 1)	(683 × 2) + (661 × 1)	683 × 3
Sound Pressure Level	Cooling	dB(A)	69.0	69.6	69.8
	Heating	dB(A)	71.1	71.3	71.8
Sound Power Level	Cooling	dB(A)	99.2	99.2	99.8
	Heating	dB(A)	103.0	103.2	103.8
Protection Devices	High pressure protection	-	High pressure sensor / High pressure switch		
	Compressor/Fan	-	Over-heat protection / Fan driver overload protector		
	Inverter	-	Over-heat protection / Over-current protection		
Communication Cable (VCTF-SB)		No.xmm^2	2C × 1.0 ~ 1.5	2C × 1.0 ~ 1.5	2C × 1.0 ~ 1.5
Refigerant	Refrigerant name		R410A	R410A	R410A
	Precharged Amount	kg	50.0	50.0	51.0
		lbs	110.2	110.2	112.4
	t-CO2 eq		104.4	104.4	106.5
	Control		Electronic Expansion Valve	Electronic Expansion Valve	Electronic Expansion Valve
Power Supply		Ø , V, Hz	380~415, 3, 50	380~415, 3, 50	380~415, 3, 50
			380, 3, 60	380, 3, 60	380, 3, 60
Number of maximum connectable indoor units ***			64	64	64

Notes:

1. Capacities are based on the following conditions:
   Cooling: - Indoor Temperature 27°C(80.6°F) DB/19°C(66.2°F) WB
   - Outdoor Temperature 35°C(95°F) DB/24°C(75.2°F) WB
   Heating: - Indoor Temperature 20°C(68°F) DB/15°C(59°F) WB
   - Outdoor Temperature 7°C(44.6°F) DB/6°C(42.8°F) WB
   Piping Length: - Interconnecting Piping Length 7.5m
   - Level Difference of Zero
2. Capacities are net capacity
3. EEV : Electronic Expansion Valve
4. Wiring cable size must comply with the applicable local and national code.
5. Due to our policy of innovation some specifications may be changed without prior notification

Conversion Formula
RT = kW x 0.284
kcal/h = kW x 860
Btu/h = kW x 3412
cfm = m^3/min x 35.3

HP			74	76	78
Model Name	Combination Unit		ARUM740LTE5	ARUM760LTE5	ARUM780LTE5
	Independent Unit		ARUM240LTE5	ARUM240LTE5	ARUM240LTE5
			ARUM240LTE5	ARUM240LTE5	ARUM240LTE5
			ARUM140LTE5	ARUM160LTE5	ARUM180LTE5
			ARUM120LTE5	ARUM120LTE5	ARUM120LTE5
Capacity	Cooling (Total)	kW	207.2	212.8	218.4
		Btu/h	707,000	726,100	745,200
	Cooling (Net/Rated)	kW	202.8	208.8	213.5
		Btu/h	692,000	712,500	728,500
	Heating (Total)	kW	230.4	236.7	243.0
		Btu/h	786,200	807,700	829,200
	Heating (Net/Rated)	kW	201.9	207.2	213.4
		Btu/h	688,900	707,000	728,200
Power Input	Cooling (Total)	kW	51.06	53.27	53.29
	Heating (Total)	kW	55.58	58.25	57.80
EER	Total		4.06	3.99	4.10
	Net		3.50	3.41	3.52
COP	Total		4.15	4.06	4.20
	Net		4.23	4.08	4.28
Power Factor	Rated	-	0.93	0.93	0.93
Heat Exchanger			Wide Louver Puls	Wide Louver Puls	Wide Louver Puls
Exterior	Color		Morning Gray / Dawn Gray	Morning Gray / Dawn Gray	Morning Gray / Dawn Gray
	RAL code		RAL 7030 / 7037	RAL 7030 / 7037	RAL 7030 / 7037
Compressor	Type		Hermetically Sealed Scroll	Hermetically Sealed Scroll	Hermetically Sealed Scroll
	Piston Displacement	cm^3/rev	62.1 × 6	62.1 × 6	(62.1 × 6) + (43.8 × 1)
	Number of Revolution	rev/min	3,600 × 6	3,600 × 6	3,600 × 6
	Motor Output × Number	W × No.	5,300 × 6	5,300 × 6	(5,300 × 6) + (4,200 × 1)
	Starting Method		Inverter	Inverter	Inverter
	Oil Type		FW68D(PVE)	FW68D(PVE)	FW68D(PVE)
Fan	Type		Propeller fan	Propeller fan	Propeller fan
	Motor Output × Number	W	(900 × 6) + (1,200 × 1)	(900 × 6) + (1,200 × 1)	(900 × 6) + (1,200 × 1)
	Air Flow Rate(High)	m^3/min	(320 × 3) + (240 × 1)	(320 × 3) + (240 × 1)	(320 × 3) + (240 × 1)
		ft^3/min	(11,301 × 3) + (8,476 × 1)	(11,301 × 3) + (8,476 × 1)	(11,301 × 3) + (8,476 × 1)
	External Static Perssure	Max., Pa	80	80	80
	Drive		DC INVERTER	DC INVERTER	DC INVERTER
	Discharge	Side / Top	TOP	TOP	TOP
Pipe Connections #1	Liquid Pipe	mm(inch)	22.2(7/8)	22.2(7/8)	22.2(7/8)
	Low Pressure Gas Pipe	mm(inch)	53.98(2-1/8)	53.98(2-1/8)	53.98(2-1/8)
	High Pressure Gas Pipe	mm(inch)	41.3(1-5/8)	41.3(1-5/8)	41.3(1-5/8)
Pipe Connections #2	Liquid Pipe	mm(inch)	22.2(7/8)	22.2(7/8)	22.2(7/8)
	Gas Pipe	mm(inch)	53.98(2-1/8)	53.98(2-1/8)	53.98(2-1/8)
Dimensions(W × H × D)		mm	(1,240 x 1,690 x 760) x 3 + (930 x 1,690 x 760) x 1	(1,240 x 1,690 x 760) x 3 + (930 x 1,690 x 760) x 1	(1,240 x 1,690 x 760) x 3 + (930 x 1,690 x 760) x 1
		inch	(48-13/16 x 66-17/32 x 29-29/32) x 3 + (36-5/8 x 66-17/32 x 29-29/32) x 1	(48-13/16 x 66-17/32 x 29-29/32) x 3 + (36-5/8 x 66-17/32 x 29-29/32) x 1	(48-13/16 x 66-17/32 x 29-29/32) x 3 + (36-5/8 x 66-17/32 x 29-29/32) x 1
Net Weight		kg	(310 x 2) + (242 x 1) + (215 x 1)	(310 x 2) + (242 x 1) + (215 x 1)	(310 x 2) + (300 x 1) + (215 x 1)
		lbs	(683 x 2) + (534 x 1) + (474 x 1)	(683 x 2) + (534 x 1) + (474 x 1)	(683 x 2) + (661 x 1) + (474 x 1)
Sound Pressure Level	Cooling	dB(A)	69.1	69.2	69.2
	Heating	dB(A)	70.9	70.9	71.0
Sound Power Level	Cooling	dB(A)	98.8	98.9	99.2
	Heating	dB(A)	102.7	102.8	103.0
Protection Devices	High pressure protection	-	High pressure sensor / High pressure switch		
	Compressor/Fan	-	Over-heat protection / Fan driver overload protector		
	Inverter	-	Over-heat protection / Over-current protection		
Communication Cable (VCTF-SB)		No.xmm^2	2C × 1.0 ~ 1.5	2C × 1.0 ~ 1.5	2C × 1.0 ~ 1.5
Refigerant	Refrigerant name		R410A	R410A	R410A
	Precharged Amount	kg	57.0	57.0	59.5
		lbs	125.7	125.7	131.2
	t-CO2 eq		119.0	119.0	124.2
	Control		Electronic Expansion Valve	Electronic Expansion Valve	Electronic Expansion Valve
Power Supply		Ø , V, Hz	380~415, 3, 50	380~415, 3, 50	380~415, 3, 50
			380, 3, 60	380, 3, 60	380, 3, 60
Number of maximum connectable indoor units ***			64	64	64

Notes:

1. Capacities are based on the following conditions:
   Cooling: - Indoor Temperature 27°C(80.6°F) DB/19°C(66.2°F) WB
   - Outdoor Temperature 35°C(95°F) DB/24°C(75.2°F) WB
   Heating: - Indoor Temperature 20°C(68°F) DB/15°C(59°F) WB
   - Outdoor Temperature 7°C(44.6°F) DB/6°C(42.8°F) WB
   Piping Length: - Interconnecting Piping Length 7.5m
   - Level Difference of Zero
2. Capacities are net capacity
3. EEV : Electronic Expansion Valve
4. Wiring cable size must comply with the applicable local and national code.
5. Due to our policy of innovation some specifications may be changed without prior notification

Conversion Formula
RT = kW x 0.284
kcal/h = kW x 860
Btu/h = kW x 3412
cfm = m^3/min x 35.3

HP			80	82	84
Model Name	Combination Unit		ARUM800LTE5	ARUM820LTE5	ARUM840LTE5
	Independent Unit		ARUM240LTE5	ARUM240LTE5	ARUM240LTE5
			ARUM240LTE5	ARUM240LTE5	ARUM240LTE5
			ARUM200LTE5	ARUM220LTE5	ARUM240LTE5
			ARUM120LTE5	ARUM120LTE5	ARUM120LTE5
Capacity	Cooling (Total)	kW	224.0	229.6	235.2
		Btu/h	764,300	783,400	802,500
	Cooling (Net/Rated)	kW	219.3	224.5	230.5
		Btu/h	748,300	766,000	786,500
	Heating (Total)	kW	249.3	255.6	260.6
		Btu/h	850,700	872,100	889,100
	Heating (Net/Rated)	kW	219.4	223.4	229.2
		Btu/h	748,600	762,300	782,100
Power Input	Cooling (Total)	kW	55.15	58.08	59.78
	Heating (Total)	kW	60.55	62.62	64.66
EER	Total		4.06	3.95	3.93
	Net		3.49	3.41	3.41
COP	Total		4.12	4.08	4.03
	Net		4.20	4.16	4.30
Power Factor	Rated	-	0.93	0.93	0.93
Heat Exchanger			Wide Louver Puls	Wide Louver Puls	Wide Louver Puls
Exterior	Color		Morning Gray / Dawn Gray	Morning Gray / Dawn Gray	Morning Gray / Dawn Gray
	RAL code		RAL 7030 / 7037	RAL 7030 / 7037	RAL 7030 / 7037
Compressor	Type		Hermetically Sealed Scroll	Hermetically Sealed Scroll	Hermetically Sealed Scroll
	Piston Displacement	cm^3/rev	(62.1 × 6) + (43.8 × 1)	(62.1 × 6) + (43.8 × 1)	62.1 × 7
	Number of Revolution	rev/min	3,600 × 6	3,600 × 6	3,600 × 7
	Motor Output x Number	W × No.	(5,300 × 6) + (4,200 × 1)	(5,300 × 6) + (4,200 × 1)	5,300 × 7
	Starting Method		Inverter	Inverter	Inverter
	Oil Type		FW68D(PVE)	FW68D(PVE)	FW68D(PVE)
Fan	Type		Propeller fan	Propeller fan	Propeller fan
	Motor Output x Number	W	(900 × 6) + (1,200 × 1)	(900 × 6) + (1,200 × 1)	(900 × 6) + (1,200 × 1)
	Air Flow Rate(High)	m^3/min	(320 × 3) + (240 × 1)	(320 × 3) + (240 × 1)	(320 × 3) + (240 × 1)
		ft^3/min	(11,301 × 3) + (8,476 × 1)	(11,301 × 3) + (8,476 × 1)	(11,301 × 3) + (8,476 × 1)
	External Static Perssure	Max., Pa	80	80	80
	Drive		DC INVERTER	DC INVERTER	DC INVERTER
	Discharge	Side / Top	TOP	TOP	TOP
Pipe Connections #1	Liquid Pipe	mm(inch)	22.2(7/8)	22.2(7/8)	22.2(7/8)
	Low Pressure Gas Pipe	mm(inch)	53.98(2-1/8)	53.98(2-1/8)	53.98(2-1/8)
	High Pressure Gas Pipe	mm(inch)	41.3(1-5/8)	41.3(1-5/8)	41.3(1-5/8)
Pipe Connections #2	Liquid Pipe	mm(inch)	22.2(7/8)	22.2(7/8)	22.2(7/8)
	Gas Pipe	mm(inch)	53.98(2-1/8)	53.98(2-1/8)	53.98(2-1/8)
Dimensions(W × H × D)		mm	(1,240 x 1,690 x 760) x 3 + (930 x 1,690 x 760) x 1	(1,240 x 1,690 x 760) x 3 + (930 x 1,690 x 760) x 1	(1,240 x 1,690 x 760) x 3 + (930 x 1,690 x 760) x 1
		inch	(48-13/16 x 66-17/32 x 29-29/32) x 3 + (36-5/8 x 66-17/32 x 29-29/32) x 1	(48-13/16 x 66-17/32 x 29-29/32) x 3 + (36-5/8 x 66-17/32 x 29-29/32) x 1	(48-13/16 x 66-17/32 x 29-29/32) x 3 + (36-5/8 x 66-17/32 x 29-29/32) x 1
Net Weight		kg	(310 x 2) + (300 x 1) + (215 x 1)	(310 x 2) + (300 x 1) + (215 x 1)	(310 x 3) + (215 x 1)
		lbs	(683 x 2) + (661 x 1) + (474 x 1)	(683 x 2) + (661 x 1) + (474 x 1)	(683 x 3) + (474 x 1)
Sound Pressure Level	Cooling	dB(A)	69.4	70.0	70.1
	Heating	dB(A)	71.4	71.6	72.1
Sound Power Level	Cooling	dB(A)	99.4	99.4	99.9
	Heating	dB(A)	103.2	103.4	103.9
Protection Devices	High pressure protection	-	High pressure sensor / High pressure switch		
	Compressor/Fan	-	Over-heat protection / Fan driver overload protector		
	Inverter	-	Over-heat protection / Over-current protection		
Communication Cable (VCTF-SB)		No.xmm^2	2C × 1.0 ~ 1.5	2C × 1.0 ~ 1.5	2C × 1.0 ~ 1.5
Refigerant	Refrigerant name		R410A	R410A	R410A
	Precharged Amount	kg	59.5	59.5	60.5
		lbs	131.2	131.2	133.4
	t-CO2 eq		124.2	124.2	126.3
	Control		Electronic Expansion Valve	Electronic Expansion Valve	Electronic Expansion Valve
Power Supply		Ø , V, Hz	380~415, 3, 50	380~415, 3, 50	380~415, 3, 50
			380, 3, 60	380, 3, 60	380, 3, 60
Number of maximum connectable indoor units ***			64	64	64

Notes:

1. Capacities are based on the following conditions:
   Cooling: - Indoor Temperature 27°C(80.6°F) DB/19°C(66.2°F) WB
   - Outdoor Temperature 35°C(95°F) DB/24°C(75.2°F) WB
   Heating: - Indoor Temperature 20°C(68°F) DB/15°C(59°F) WB
   - Outdoor Temperature 7°C(44.6°F) DB/6°C(42.8°F) WB
   Piping Length: - Interconnecting Piping Length 7.5m
   - Level Difference of Zero
2. Capacities are net capacity
3. EEV : Electronic Expansion Valve
4. Wiring cable size must comply with the applicable local and national code.
5. Due to our policy of innovation some specifications may be changed without prior notification

Conversion Formula
RT = kW x 0.284
kcal/h = kW x 860
Btu/h = kW x 3412
cfm = m^3/min x 35.3

HP			86	88	90
Model Name	Combination Unit		ARUM860LTE5	ARUM880LTE5	ARUM900LTE5
	Independent Unit		ARUM240LTE5	ARUM240LTE5	ARUM240LTE5
			ARUM240LTE5	ARUM240LTE5	ARUM240LTE5
			ARUM240LTE5	ARUM240LTE5	ARUM240LTE5
			ARUM140LTE5	ARUM160LTE5	ARUM180LTE5
Capacity	Cooling (Total)	kW	240.8	246.4	252.0
		Btu/h	821,600	840,700	859,800
	Cooling (Net/Rated)	kW	236.3	242.3	247.0
		Btu/h	806,300	826,800	842,800
	Heating (Total)	kW	266.9	273.2	279.5
		Btu/h	910,600	932,000	953,500
	Heating (Net/Rated)	kW	233.9	239.2	245.4
		Btu/h	798,100	816,200	837,400
Power Input	Cooling (Total)	kW	60.88	63.09	63.11
	Heating (Total)	kW	66.12	68.79	68.34
EER	Total		3.96	3.91	3.99
	Net		3.41	3.34	3.42
COP	Total		4.04	3.97	4.09
	Net		4.26	4.13	4.31
Power Factor	Rated	-	0.93	0.93	0.93
Heat Exchanger			Wide Louver Puls	Wide Louver Puls	Wide Louver Puls
Exterior	Color		Morning Gray / Dawn Gray	Morning Gray / Dawn Gray	Morning Gray / Dawn Gray
	RAL code		RAL 7030 / 7037	RAL 7030 / 7037	RAL 7030 / 7037
Compressor	Type		Hermetically Sealed Scroll	Hermetically Sealed Scroll	Hermetically Sealed Scroll
	Piston Displacement	cm^3/rev	62.1 × 7	62.1 × 7	(62.1 × 7) + (43.8 × 1)
	Number of Revolution	rev/min	3,600 × 7	3,600 × 7	3,600 × 8
	Motor Output × Number	W × No.	5,300 × 7	5,300 × 7	(5,300 × 7) + (4,200 × 1)
	Starting Method		Inverter	Inverter	Inverter
	Oil Type		FW68D(PVE)	FW68D(PVE)	FW68D(PVE)
Fan	Type		Propeller fan	Propeller fan	Propeller fan
	Motor Output × Number	W	900 × 8	900 × 8	900 × 8
	Air Flow Rate(High)	m^3/min	320 × 4	320 × 4	320 × 4
		ft^3/min	11,301 × 4	11,301 × 4	11,301 × 4
	External Static Perssure	Max., Pa	80	80	80
	Drive		DC INVERTER	DC INVERTER	DC INVERTER
	Discharge	Side / Top	TOP	TOP	TOP
Pipe Connections #1	Liquid Pipe	mm(inch)	22.2(7/8)	22.2(7/8)	22.2(7/8)
	Low Pressure Gas Pipe	mm(inch)	53.98(2-1/8)	53.98(2-1/8)	53.98(2-1/8)
	High Pressure Gas Pipe	mm(inch)	41.3(1-5/8)	41.3(1-5/8)	41.3(1-5/8)
Pipe Connections #2	Liquid Pipe	mm(inch)	22.2(7/8)	22.2(7/8)	22.2(7/8)
	Gas Pipe	mm(inch)	53.98(2-1/8)	53.98(2-1/8)	53.98(2-1/8)
Dimensions(W × H × D)		mm	(1,240 ×1,690 × 760) × 4	(1,240 ×1,690 × 760) × 4	(1,240 ×1,690 × 760) × 4
		inch	(48-13/16 × 66-17/32 × 29-29/32) × 4	(48-13/16 × 66-17/32 × 29-29/32) × 4	(48-13/16 × 66-17/32 × 29-29/32) × 4
Net Weight		kg	(310 × 3) + (242 × 1)	(310 × 3) + (242 × 1)	(310 × 3) + (300 × 1)
		lbs	(683 × 3) + (534 × 1)	(683 × 3) + (534 × 1)	(683 × 3) + (661 × 1)
Sound Pressure Level	Cooling	dB(A)	70.2	70.3	70.3
	Heating	dB(A)	72.1	72.2	72.2
Sound Power Level	Cooling	dB(A)	100.1	100.2	100.4
	Heating	dB(A)	104.1	104.2	104.3
Protection Devices	High pressure protection	-	High pressure sensor / High pressure switch		
	Compressor/Fan	-	Over-heat protection / Fan driver overload protector		
	Inverter	-	Over-heat protection / Over-current protection		
Communication Cable (VCTF-SB)		No.xmm^2	2C × 1.0 ~ 1.5	2C × 1.0 ~ 1.5	2C × 1.0 ~ 1.5
Refigerant	Refrigerant name		R410A	R410A	R410A
	Precharged Amount	kg	64.5	64.5	67.0
		lbs	142.2	142.2	147.7
	t-CO2 eq		134.6	134.6	139.9
	Control		Electronic Expansion Valve	Electronic Expansion Valve	Electronic Expansion Valve
Power Supply		Ø , V, Hz	380~415, 3, 50	380~415, 3, 50	380~415, 3, 50
			380, 3, 60	380, 3, 60	380, 3, 60
Number of maximum connectable indoor units ***			64	64	64

Notes:

1. Capacities are based on the following conditions:
   Cooling: - Indoor Temperature 27°C(80.6°F) DB/19°C(66.2°F) WB
   - Outdoor Temperature 35°C(95°F) DB/24°C(75.2°F) WB
   Heating: - Indoor Temperature 20°C(68°F) DB/15°C(59°F) WB
   - Outdoor Temperature 7°C(44.6°F) DB/6°C(42.8°F) WB
   Piping Length: - Interconnecting Piping Length 7.5m
   - Level Difference of Zero
2. Capacities are net capacity
3. EEV : Electronic Expansion Valve
4. Wiring cable size must comply with the applicable local and national code.
5. Due to our policy of innovation some specifications may be changed without prior notification

Conversion Formula
RT = kW x 0.284
kcal/h = kW x 860
Btu/h = kW x 3412
cfm = m^3/min x 35.3

Specifications (For Australia)

HP			92	94	96
Model Name	Combination Unit		ARUM920LTE5	ARUM940LTE5	ARUM960LTE5
	Independent Unit		ARUM240LTE5	ARUM240LTE5	ARUM240LTE5
			ARUM240LTE5	ARUM240LTE5	ARUM240LTE5
			ARUM240LTE5	ARUM240LTE5	ARUM240LTE5
			ARUM200LTE5	ARUM220LTE5	ARUM240LTE5
Capacity	Cooling (Total)	kW	257.6	263.2	268.8
		Btu/h	878,900	898,000	917,100
	Cooling (Net/Rated)	kW	252.8	258.0	264.0
		Btu/h	862,600	880,300	900,800
	Heating (Total)	kW	285.8	292.1	297.0
		Btu/h	975,000	996,500	1,013,400
	Heating (Net/Rated)	kW	251.4	255.4	261.2
		Btu/h	857,800	871,500	891,300
Power Input	Cooling (Total)	kW	64.97	67.90	69.60
	Heating (Total)	kW	71.09	73.16	75.20
EER	Total		3.96	3.88	3.86
	Net		3.40	3.34	3.34
COP	Total		4.02	3.99	3.95
	Net		4.24	4.20	4.32
Power Factor	Rated	-	0.93	0.93	0.93
Heat Exchanger			Wide Louver Puls	Wide Louver Puls	Wide Louver Puls
Exterior	Color		Morning Gray / Dawn Gray	Morning Gray / Dawn Gray	Morning Gray / Dawn Gray
	RAL code		RAL 7030 / 7037	RAL 7030 / 7037	RAL 7030 / 7037
Compressor	Type		Hermetically Sealed Scroll	Hermetically Sealed Scroll	Hermetically Sealed Scroll
	Piston Displacement	cm^3/rev	(62.1 × 7) + (43.8 × 1)	(62.1 × 7) + (43.8 × 1)	62.1 × 8
	Number of Revolution	rev/min	3,600 × 8	3,600 × 8	3,600 × 8
	Motor Output x Number	W × No.	(5,300 × 7) + (4,200 × 1)	(5,300 × 7) + (4,200 × 1)	5,300 × 8
	Starting Method		Inverter	Inverter	Inverter
	Oil Type		FW68D(PVE)	FW68D(PVE)	FW68D(PVE)
Fan	Type		Propeller fan	Propeller fan	Propeller fan
	Motor Output x Number	W	900 × 8	900 × 8	900 × 8
	Air Flow Rate(High)	m^3/min	320 × 4	320 × 4	320 × 4
		ft^3/min	11,301 × 4	11,301 × 4	11,301 × 4
	External Static Perssure	Max., Pa	80	80	80
	Drive		DC INVERTER	DC INVERTER	DC INVERTER
	Discharge	Side / Top	TOP	TOP	TOP
Pipe Connections #1	Liquid Pipe	mm(inch)	22.2(7/8)	22.2(7/8)	22.2(7/8)
	Low Pressure Gas Pipe	mm(inch)	53.98(2-1/8)	53.98(2-1/8)	53.98(2-1/8)
	High Pressure Gas Pipe	mm(inch)	41.3(1-5/8)	41.3(1-5/8)	41.3(1-5/8)
Pipe Connections #2	Liquid Pipe	mm(inch)	22.2(7/8)	22.2(7/8)	22.2(7/8)
	Gas Pipe	mm(inch)	53.98(2-1/8)	53.98(2-1/8)	53.98(2-1/8)
Dimensions(W × H × D)		mm	(1,240 ×1,690 × 760) × 4	(1,240 ×1,690 × 760) × 4	(1,240 ×1,690 × 760) × 4
		inch	(48-13/16 × 66-17/32 × 29-29/32) × 4	(48-13/16 × 66-17/32 × 29-29/32) × 4	(48-13/16 × 66-17/32 × 29-29/32) × 4
Net Weight		kg	(310 × 3) + (300 × 1)	(310 × 3) + (300 × 1)	310 × 4
		lbs	(683 × 3) + (661 × 1)	(683 × 3) + (661 × 1)	683 × 4
Sound Pressure Level	Cooling	dB(A)	70.4	70.9	71.0
	Heating	dB(A)	72.5	72.7	73.0
Sound Power Level	Cooling	dB(A)	100.6	100.6	101.0
	Heating	dB(A)	104.4	104.6	105.0
Protection Devices	High pressure protection	-	High pressure sensor / High pressure switch		
	Compressor/Fan	-	Over-heat protection / Fan driver overload protector		
	Inverter	-	Over-heat protection / Over-current protection		
Communication Cable (VCTF-SB)		No.xmm^2	2C × 1.0 ~ 1.5	2C × 1.0 ~ 1.5	2C × 1.0 ~ 1.5
Refigerant	Refrigerant name		R410A	R410A	R410A
	Precharged Amount	kg	67.0	67.0	68.0
		lbs	147.7	147.7	149.9
	t-CO2 eq		139.9	139.9	142.0
	Control		Electronic Expansion Valve	Electronic Expansion Valve	Electronic Expansion Valve
Power Supply		Ø , V, Hz	380~415, 3, 50	380~415, 3, 50	380~415, 3, 50
			380, 3, 60	380, 3, 60	380, 3, 60
Number of maximum connectable indoor units ***			64	64	64

Notes:

1. Capacities are based on the following conditions:
   Cooling: - Indoor Temperature 27°C(80.6°F) DB/19°C(66.2°F) WB
   - Outdoor Temperature 35°C(95°F) DB/24°C(75.2°F) WB
   Heating: - Indoor Temperature 20°C(68°F) DB/15°C(59°F) WB
   - Outdoor Temperature 7°C(44.6°F) DB/6°C(42.8°F) WB
   Piping Length: - Interconnecting Piping Length 7.5m
   - Level Difference of Zero
2. Capacities are net capacity
3. EEV : Electronic Expansion Valve
4. Wiring cable size must comply with the applicable local and national code.
5. Due to our policy of innovation some specifications may be changed without prior notification

Conversion Formula
RT = kW x 0.284
kcal/h = kW x 860
Btu/h = kW x 3412
cfm = m^3/min x 35.3

3. Specifications (For Latin America)

50Hz/60Hz

HP			8	10
Model Name	Combination Unit		ARUM080LTE5	ARUM100LTE5
	Independent Unit		ARUM080LTE5	ARUM100LTE5
Capacity	Cooling (Rated)	kW	22.4	28
		kcal/h	19,300	24,100
		Btu/h	76,400	95,500
	Heating (Rated)	kW	22.4	28
		kcal/h	19,300	24,100
		Btu/h	76,400	95,500
	Heating (Max)	kW	25.2	31.5
		kcal/h	21,700	27,100
		Btu/h	86,000	107,500
Input	Cooling (Rated)	kW	5.28	6.83
	Heating (Rated)	kW	3.97	4.92
	Heating (Max)	kW	4.78	5.92
Power Factor	Rated	-	0.93	0.93
Heat Exchanger			Wide Louver Plus	Wide Louver Plus
Exterior	Color		Morning Gray / Dawn Gray	Morning Gray / Dawn Gray
	RAL code		RAL 7030 / 7037	RAL 7030 / 7037
Compressor	Type		Hermetically Sealed Scroll	Hermetically Sealed Scroll
	Piston Displacement	cm^3/rev	43.8	62.1
	Number of Revolution	rev/min	3,600	3,600
	Motor Output × Number	W × No.	4,200 × 1	5,300 × 1
	Starting Method		Inverter	Inverter
	Oil Type		FW68D(PVE)	FW68D(PVE)
	Oil Charge	cc	1200	1200
Fan	Type		Propeller fan	Propeller fan
	Motor Output × Number	W	1,200 × 1	1,200 × 1
	Air Flow Rate(High)	m^3/min	240 × 1	240 × 1
		ft^3/min	8,476 × 1	8,476 × 1
	Drive		DC INVERTER	DC INVERTER
	Discharge	Side / Top	TOP	TOP
Pipe Connections #1	Liquid Pipe	mm(inch)	9.52(3/8)	9.52(3/8)
	Low Pressure Gas Pipe	mm(inch)	19.05(3/4)	22.2(7/8)
	High Pressure Gas Pipe	mm(inch)	15.88(5/8)	19.05(3/4)
Pipe Connections #2	Liquid Pipe	mm(inch)	9.52(3/8)	9.52(3/8)
	Gas Pipe	mm(inch)	19.05(3/4)	22.2(7/8)
Dimensions(W × H × D)		mm	(930 × 1,690 × 760) × 1	(930 × 1,690 × 760) × 1
		inch	(36-5/8 × 66-17/32 × 29-29/32) × 1	(36-5/8 × 66-17/32 × 29-29/32) × 1
Net Weight		kg	198 × 1	215 × 1
		lbs	437 × 1	474 × 1
Sound Pressure Level	Cooling	dB(A)	58	58
	Heating	dB(A)	59	59
Sound Power Level	Cooling	dB(A)	79.0	79.0
	Heating	dB(A)	79.0	79.0
Protection Devices	High pressure protection	-	High pressure sensor / High pressure switch	High pressure sensor / High pressure switch
	Compressor/Fan	-	Over-heat protection / Fan driver overload protector	Over-heat protection / Fan driver overload protector
	Inverter	-	Over-heat protection / Over-current protection	Over-heat protection / Over-current protection
Communication Cable		No.xmm^2(VCTF-SB)	2C × 1.0 ~ 1.5	2C × 1.0 ~ 1.5
Refigerant	Refrigerant name		R410A	R410A
	Precharged Amount	kg	7.5	9.5
	in factory	lbs	16.5	20.9
	Control		Electronic Expansion Valve	Electronic Expansion Valve
Power Supply		Ø , V, Hz	3, 380-415, 50	3, 380-415, 50
			3, 380, 60	3, 380, 60

Notes:

1. Capacities are based on the following conditions:
   Cooling: - Indoor Temperature 27°C(80.6°F) DB/19°C(66.2°F) WB
   - Outdoor Temperature 35°C(95°F) DB/24°C(75.2°F) WB
   Heating: - Indoor Temperature 20°C(68°F) DB/15°C(59°F) WB
   - Outdoor Temperature 7°C(44.6°F) DB/6°C(42.8°F) WB
   Piping Length: - Interconnecting Piping Length 7.5m
   - Level Difference of Zero
2. Capacities are net capacity
3. EEV : Electronic Expansion Valve
4. Wiring cable size must comply with the applicable local and national code.
5. Due to our policy of innovation some specifications may be changed without prior notification

Conversion Formula
RT = kW x 0.284
kcal/h = kW x 860
Btu/h = kW x 3412
cfm = m^3/min x 35.3

Specifications (For Latin America)

HP			12	14
Model Name	Combination Unit		ARUM120LTE5	ARUM140LTE5
	Independent Unit		ARUM120LTE5	ARUM140LTE5
Capacity	Cooling (Rated)	kW	33.6	39.2
		kcal/h	28,900	33,700
		Btu/h	114,600	133,800
	Heating (Rated)	kW	33.6	39.2
		kcal/h	28,900	33,700
		Btu/h	114,600	133,800
	Heating (Max)	kW	37.8	44.1
		kcal/h	32,500	37,900
		Btu/h	129,000	150,500
Input	Cooling (Rated)	kW	7.71	8.67
	Heating (Rated)	kW	6.85	8.48
	Heating (Max)	kW	8.26	9.72
Power Factor	Rated	-	0.93	0.93
Heat Exchanger			Wide Louver Plus	Wide Louver Plus
Exterior	Color		Morning Gray / Dawn Gray	Morning Gray / Dawn Gray
	RAL code		RAL 7030 / 7037	RAL 7030 / 7037
Compressor	Type		Hermetically Sealed Scroll	Hermetically Sealed Scroll
	Piston Displacement	cm^3/rev	62.1	62.1
	Number of Revolution	rev/min	3,600	3,600
	Motor Output × Number	W × No.	5,300 × 1	5,300 × 1
	Starting Method		Inverter	Inverter
	Oil Type		FW68D(PVE)	FW68D(PVE)
	Oil Charge	cc	1200	2400
Fan	Type		Propeller fan	Propeller fan
	Motor Output × Number	W	1,200 × 1	900 × 2
	Air Flow Rate(High)	m^3/min	240 × 1	320 × 1
		ft^3/min	8,476 × 1	1,1301 × 1
	Drive		DC INVERTER	DC INVERTER
	Discharge	Side / Top	TOP	TOP
Pipe Connections #1	Liquid Pipe	mm(inch)	12.7(1/2)	12.7(1/2)
	Low Pressure Gas Pipe	mm(inch)	28.58(1-1/8)	28.58(1-1/8)
	High Pressure Gas Pipe	mm(inch)	19.05(3/4)	22.2(7/8)
Pipe Connections #2	Liquid Pipe	mm(inch)	12.7(1/2)	12.7(1/2)
	Gas Pipe	mm(inch)	28.58(1-1/8)	28.58(1-1/8)
Dimensions(W × H × D)		mm	(930 × 1,690 × 760) × 1	(1,240 × 1,690 × 760)×1
		inch	(36-5/8 × 66-17/32 × 29-29/32) × 1	(48-13/16 × 66-17/32 × 29-29/32) × 1
Net Weight		kg	215 × 1	237 × 1
		lbs	474 × 1	522 × 1
Sound Pressure Level	Cooling	dB(A)	59	60
	Heating	dB(A)	60	61
Sound Power Level	Cooling	dB(A)	81.0	81.0
	Heating	dB(A)	81.0	82.0
Protection Devices	High pressure protection	-	High pressure sensor / High pressure switch	High pressure sensor / High pressure switch
	Compressor/Fan	-	Over-heat protection / Fan driver overload protector	Over-heat protection / Fan driver overload protector
	Inverter	-	Over-heat protection / Over-current protection	Over-heat protection / Over-current protection
Communication Cable		No.×mm^2(VCTF-SB)	2C × 1.0 ~ 1.5	2C × 1.0 ~ 1.5
Refigerant	Refrigerant name		R410A	R410A
	Precharged Amount	kg	9.5	13.5
	in factory	lbs	20.9	29.8
	Control		Electronic Expansion Valve	Electronic Expansion Valve
Power Supply		Ø , V, Hz	3, 380-415, 50	3, 380-415, 50
			3, 380, 60	3, 380, 60

Notes:

1. Capacities are based on the following conditions:
   Cooling: - Indoor Temperature 27°C(80.6°F) DB/19°C(66.2°F) WB
   - Outdoor Temperature 35°C(95°F) DB/24°C(75.2°F) WB
   Heating: - Indoor Temperature 20°C(68°F) DB/15°C(59°F) WB
   - Outdoor Temperature 7°C(44.6°F) DB/6°C(42.8°F) WB
   Piping Length: - Interconnecting Piping Length 7.5m
   - Level Difference of Zero
2. Capacities are net capacity
3. EEV : Electronic Expansion Valve
4. Wiring cable size must comply with the applicable local and national code.
5. Due to our policy of innovation some specifications may be changed without prior notification

Conversion Formula
RT = kW x 0.284
kcal/h = kW x 860
Btu/h = kW x 3412
cfm = m^3/min x 35.3

HP			16	18
Model Name	Combination Unit		ARUM160LTE5	ARUM180LTE5
	Independent Unit		ARUM160LTE5	ARUM180LTE5
Capacity	Cooling (Rated)	kW	44.8	50.4
		kcal/h	38,500	43,300
		Btu/h	152,900	172,000
	Heating (Rated)	kW	44.8	50.4
		kcal/h	38,500	43,300
		Btu/h	152,900	172,000
	Heating (Max)	kW	50.4	56.7
		kcal/h	43,300	48,800
		Btu/h	172,000	193,500
Input	Cooling (Rated)	kW	10.90	11.03
	Heating (Rated)	kW	10.28	10.12
	Heating (Max)	kW	12.39	11.94
Power Factor	Rated	-	0.93	0.93
Heat Exchanger			Wide Louver Plus	Wide Louver Plus
Exterior	Color		Morning Gray / Dawn Gray	Morning Gray / Dawn Gray
	RAL code		RAL 7030 / 7037	RAL 7030 / 7037
Compressor	Type		Hermetically Sealed Scroll	Hermetically Sealed Scroll
	Piston Displacement	cm^3/rev	62.1	62.1 × 1 + 43.8 × 1
	Number of Revolution	rev/min	3,600	3,600 × 2
	Motor Output × Number	W × No.	5,300 × 1	5,300 × 1 + 4,200 × 1
	Starting Method		Inverter	Inverter
	Oil Type		FW68D(PVE)	FW68D(PVE)
	Oil Charge	cc	2400	2400
Fan	Type		Propeller fan	Propeller fan
	Motor Output × Number	W	900 × 2	900 × 2
	Air Flow Rate(High)	m^3/min	320 × 1	320 × 1
		ft^3/min	1,1301 × 1	1,1301 × 1
	Drive		DC INVERTER	DC INVERTER
	Discharge	Side / Top	TOP	TOP
Pipe Connections #1	Liquid Pipe	mm(inch)	12.7(1/2)	15.88(5/8)
	Low Pressure Gas Pipe	mm(inch)	28.58(1-1/8)	28.58(1-1/8)
	High Pressure Gas Pipe	mm(inch)	22.2(7/8)	22.2(7/8)
Pipe Connections #2	Liquid Pipe	mm(inch)	12.7(1/2)	15.88(5/8)
	Gas Pipe	mm(inch)	28.58(1-1/8)	28.58(1-1/8)
Dimensions(W × H × D)		mm	(1,240 × 1,690 × 760)×1	(1,240 × 1,690 × 760)×1
		inch	(48-13/16 x 66-17/32 x 29-29/32) x 1	(48-13/16 x 66-17/32 x 29-29/32) x 1
Net Weight		kg	237 × 1	300 × 1
		lbs	522 × 1	661 × 1
Sound Pressure Level	Cooling	dB(A)	60.5	61
	Heating	dB(A)	61.5	62
Sound Power Level	Cooling	dB(A)	85.0	87.0
	Heating	dB(A)	86.0	87.0
Protection Devices	High pressure protection	-	High pressure sensor / High pressure switch	High pressure sensor / High pressure switch
	Compressor/Fan	-	Over-heat protection / Fan driver overload protector	Over-heat protection / Fan driver overload protector
	Inverter	-	Over-heat protection / Over-current protection	Over-heat protection / Over-current protection
Communication Cable		No.xmm^2(VCTF-SB)	2C × 1.0 ~ 1.5	2C × 1.0 ~ 1.5
Refigerant	Refrigerant name		R410A	R410A
	Precharged Amount	kg	13.5	16
	in factory	lbs	29.8	35.3
	Control		Electronic Expansion Valve	Electronic Expansion Valve
Power Supply		Ø , V, Hz	3, 380-415, 50	3, 380-415, 50
			3, 380, 60	3, 380, 60

Notes:

1. Capacities are based on the following conditions:
   Cooling: - Indoor Temperature 27°C(80.6°F) DB/19°C(66.2°F) WB
   - Outdoor Temperature 35°C(95°F) DB/24°C(75.2°F) WB
   Heating: - Indoor Temperature 20°C(68°F) DB/15°C(59°F) WB
   - Outdoor Temperature 7°C(44.6°F) DB/6°C(42.8°F) WB
   Piping Length: - Interconnecting Piping Length 7.5m
   - Level Difference of Zero
2. Capacities are net capacity
3. EEV : Electronic Expansion Valve
4. Wiring cable size must comply with the applicable local and national code.
5. Due to our policy of innovation some specifications may be changed without prior notification

Conversion Formula
RT = kW x 0.284
kcal/h = kW x 860
Btu/h = kW x 3412
cfm = m^3/min x 35.3

Specifications (For Latin America)

HP			20	22
Model Name	Combination Unit		ARUM200LTE5	ARUM220LTE5
	Independent Unit		ARUM200LTE5	ARUM220LTE5
Capacity	Cooling (Rated)	kW	56	61.6
		kcal/h	48,100	53,000
		Btu/h	191,100	210,200
	Heating (Rated)	kW	56	61.6
		kcal/h	48,100	53,000
		Btu/h	191,100	210,200
	Heating (Max)	kW	63	69.3
		kcal/h	54,200	59,600
		Btu/h	215,000	236,500
Input	Cooling (Rated)	kW	12.76	15.92
	Heating (Rated)	kW	12.2	14.15
	Heating (Max)	kW	14.69	16.76
Power Factor	Rated	-	0.93	0.93
Heat Exchanger			Wide Louver Plus	Wide Louver Plus
Exterior	Color		Morning Gray / Dawn Gray	Morning Gray / Dawn Gray
	RAL code		RAL 7030 / 7037	RAL 7030 / 7037
Compressor	Type		Hermetically Sealed Scroll	Hermetically Sealed Scroll
	Piston Displacement	cm^3/rev	62.1 × 1 + 43.8 × 1	62.1 × 1 + 43.8 × 1
	Number of Revolution	rev/min	3,600 × 2	3,600 × 2
	Motor Output × Number	W × No.	5,300 × 1 + 4,200 × 1	5,300 × 1 + 4,200 × 1
	Starting Method		Inverter	Inverter
	Oil Type		FW68D(PVE)	FW68D(PVE)
	Oil Charge	cc	2400	2400
Fan	Type		Propeller fan	Propeller fan
	Motor Output × Number	W	900 × 2	900 × 2
	Air Flow Rate(High)	m^3/min	320 × 1	320 × 1
		ft^3/min	1,1301 × 1	1,1301 × 1
	Drive		DC INVERTER	DC INVERTER
	Discharge	Side / Top	TOP	TOP
Pipe Connections #1	Liquid Pipe	mm(inch)	15.88(5/8)	15.88(5/8)
	Low Pressure Gas Pipe	mm(inch)	28.58(1-1/8)	28.58(1-1/8)
	High Pressure Gas Pipe	mm(inch)	22.2(7/8)	28.58(1-1/8)
Pipe Connections #2	Liquid Pipe	mm(inch)	15.88(5/8)	15.88(5/8)
	Gas Pipe	mm(inch)	28.58(1-1/8)	28.58(1-1/8)
Dimensions(W × H × D)		mm	(1,240 × 1,690 × 760)×1	(1,240 × 1,690 × 760)×1
		inch	(48-13/16 × 66-17/32 × 29-29/32) × 1	(48-13/16 × 66-17/32 × 29-29/32) × 1
Net Weight		kg	300 × 1	300 × 1
		lbs	661 × 1	661 × 1
Sound Pressure Level	Cooling	dB(A)	62	64.5
	Heating	dB(A)	64.5	65.5
Sound Power Level	Cooling	dB(A)	89.0	91.0
	Heating	dB(A)	90.0	93.0
Protection Devices	High pressure protection	-	High pressure sensor / High pressure switch	High pressure sensor / High pressure switch
	Compressor/Fan	-	Over-heat protection / Fan driver overload protector	Over-heat protection / Fan driver overload protector
	Inverter	-	Over-heat protection / Over-current protection	Over-heat protection / Over-current protection
Communication Cable		No.xmm^2(VCTF-SB)	2C × 1.0 ~ 1.5	2C × 1.0 ~ 1.5
Refigerant	Refrigerant name		R410A	R410A
	Precharged Amount	kg	16	16
	in factory	lbs	35.3	35.3
	Control		Electronic Expansion Valve	Electronic Expansion Valve
Power Supply		Ø , V, Hz	3, 380-415, 50	3, 380-415, 50
			3, 380, 60	3, 380, 60

Notes:

1. Capacities are based on the following conditions:
   Cooling: - Indoor Temperature 27°C(80.6°F) DB/19°C(66.2°F) WB
   - Outdoor Temperature 35°C(95°F) DB/24°C(75.2°F) WB
   Heating: - Indoor Temperature 20°C(68°F) DB/15°C(59°F) WB
   - Outdoor Temperature 7°C(44.6°F) DB/6°C(42.8°F) WB
   Piping Length: - Interconnecting Piping Length 7.5m
   - Level Difference of Zero
2. Capacities are net capacity
3. EEV : Electronic Expansion Valve
4. Wiring cable size must comply with the applicable local and national code.
5. Due to our policy of innovation some specifications may be changed without prior notification

Conversion Formula
RT = kW x 0.284
kcal/h = kW x 860
Btu/h = kW x 3412
cfm = m^3/min x 35.3

HP			24	26
Model Name	Combination Unit		ARUM240LTE5	ARUM260LTE5
	Independent Unit		ARUM240LTE5	ARUM260LTE5
Capacity	Cooling (Rated)	kW	67.2	72.8
		kcal/h	57,800	62,600
		Btu/h	229,300	248,400
	Heating (Rated)	kW	67.2	67.2
		kcal/h	57,800	57,800
		Btu/h	229,300	229,300
	Heating (Max)	kW	74.3	74.3
		kcal/h	63,800	63,800
		Btu/h	253,400	253,400
Input	Cooling (Rated)	kW	17.41	20.22
	Heating (Rated)	kW	15.89	15.89
	Heating (Max)	kW	18.8	19.15
Power Factor	Rated	-	0.93	0.93
Heat Exchanger			Wide Louver Plus	Wide Louver Plus
Exterior	Color		Morning Gray / Dawn Gray	Morning Gray / Dawn Gray
	RAL code		RAL 7030 / 7037	RAL 7030 / 7037
Compressor	Type		Hermetically Sealed Scroll	Hermetically Sealed Scroll
	Piston Displacement	cm^3/rev	62.1 × 2	62.1 × 2
	Number of Revolution	rev/min	3,600 × 2	3,600 × 2
	Motor Output × Number	W × No.	5,300 × 2	5,300 × 2
	Starting Method		Inverter	Inverter
	Oil Type		FW68D(PVE)	FW68D(PVE)
	Oil Charge	cc	2400	2400
Fan	Type		Propeller fan	Propeller fan
	Motor Output × Number	W	900 × 2	900 × 2
	Air Flow Rate(High)	m^3/min	320 × 1	320 × 1
		ft^3/min	1,1301 × 1	1,1301 × 1
	Drive		DC INVERTER	DC INVERTER
	Discharge	Side / Top	TOP	TOP
Pipe Connections #1	Liquid Pipe	mm(inch)	15.88(5/8)	19.05(3/4)
	Low Pressure Gas Pipe	mm(inch)	34.9(1-3/8)	34.9(1-3/8)
	High Pressure Gas Pipe	mm(inch)	28.58(1-1/8)	28.58(1-1/8)
Pipe Connections #2	Liquid Pipe	mm(inch)	15.88(5/8)	19.05(3/4)
	Gas Pipe	mm(inch)	34.9(1-3/8)	34.9(1-3/8)
Dimensions(W × H × D)		mm	(1,240 × 1,690 × 760)×1	(1,240 × 1,690 × 760)×1
		inch	(48-13/16 × 66-17/32 × 29-29/32) × 1	(48-13/16 × 66-17/32 × 29-29/32) × 1
Net Weight		kg	310 × 1	310 × 1
		lbs	683 × 1	683 × 1
Sound Pressure Level	Cooling	dB(A)	65	65
	Heating	dB(A)	67	67
Sound Power Level	Cooling	dB(A)	91.0	91.0
	Heating	dB(A)	93.0	93.0
Protection Devices	High pressure protection	-	High pressure sensor / High pressure switch	High pressure sensor / High pressure switch
	Compressor/Fan	-	Over-heat protection / Fan driver overload protector	Over-heat protection / Fan driver overload protector
	Inverter	-	Over-heat protection / Over-current protection	Over-heat protection / Over-current protection
Communication Cable		No.xmm^2(VCTF-SB)	2C × 1.0 ~ 1.5	2C × 1.0 ~ 1.5
Refigerant	Refrigerant name		R410A	R410A
	Precharged Amount	kg	17	17
	in factory	lbs	37.5	37.5
	Control		Electronic Expansion Valve	Electronic Expansion Valve
Power Supply		Ø , V, Hz	3, 380-415, 50	3, 380-415, 50
			3, 380, 60	3, 380, 60

Notes:

1. Capacities are based on the following conditions:
   Cooling: - Indoor Temperature 27°C(80.6°F) DB/19°C(66.2°F) WB
   - Outdoor Temperature 35°C(95°F) DB/24°C(75.2°F) WB
   Heating: - Indoor Temperature 20°C(68°F) DB/15°C(59°F) WB
   - Outdoor Temperature 7°C(44.6°F) DB/6°C(42.8°F) WB
   Piping Length: - Interconnecting Piping Length 7.5m
   - Level Difference of Zero
2. Capacities are net capacity
3. EEV : Electronic Expansion Valve
4. Wiring cable size must comply with the applicable local and national code.
5. Due to our policy of innovation some specifications may be changed without prior notification

Conversion Formula
RT = kW x 0.284
kcal/h = kW x 860
Btu/h = kW x 3412
cfm = m^3/min x 35.3

4. Functions

Category	Functions	Multi V 5
Reliability	Defrost / Deicing	O
	High pressure switch	O
	Phase protection	O
	Restart delay (3-minutes)	O
	Self diagnosis	O
	Soft start	O
	Test function	O
Convenience	Night Silent Operation	O
CAC network function	Network soluation(LGAP)	O
	Power Distribution Indicator	O

[Note]
O : Applied, X : Not applied
* Option : Model name & price are different according to options, and assembled in factory with main unit.
Accessory model name : Installed at field, ordered and purchased separately by the corresponding model name, supplied with separate package.
ex) Group control is not available for 4 way cassette which is connected with synchro models.

Device		Multi V 5
Central Controller	AC EZ	PQCSZ250S0
	AC EZ Touch	PACEZA000
	AC Smart IV	PACS4B000
	ACP IV	PACP4B000
	AC Manager IV **	PACM4B000
BNU (Building Network Unit)	ACP BACnet	PQNFB17C0
	ACP Lonworks	PLNWKB000
Installation	Y branch	Accessory
	Header branch	Accessory
	Air Guide	Accessory
Cool / Heat Selector		PRDSBM
Program	LG MV	Option

[Note]
O : Applied, X : Not applied
* Option : Model name & price are different according to options, and assembled in factory with main unit.
Accessory model name : Installed at field, ordered and purchased separately by the corresponding model name, supplied with separate package.
ex) Group control is not available for 4 way cassette which is connected with synchro models.

5. Dimensions

Outdoor Unit

ARUM080LTE5
ARUM100LTE5
ARUM120LTE5

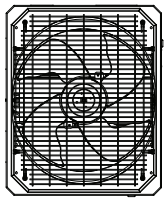

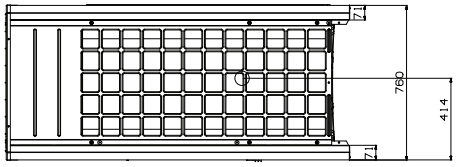

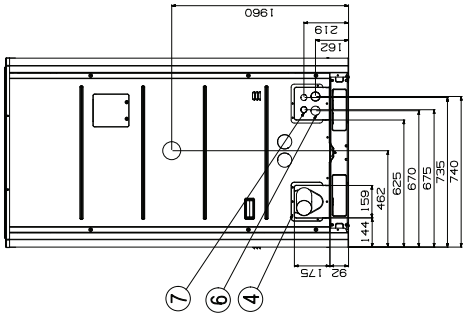

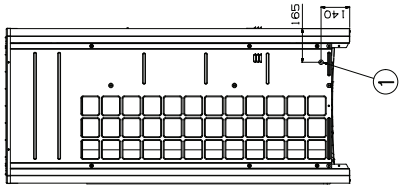

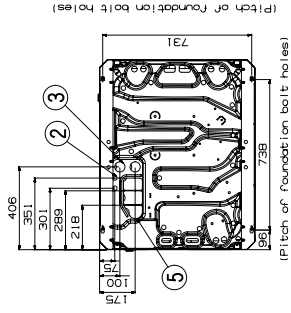

No.	Part Name	Description
7	Wire routing hole(front)	2-Ø30
6	Power cord routing hole(front)	2-Ø45
5	Pipe routing hole(bottom)	-
4	Pipe routing hole(front)	-
3	Power cord routing hole(bottom)	3-Ø50
2	Wire routiong hole(bottom)	2-Ø22.2
1	Leakage test hole(side)	Ø22.2

[Unit : mm]

LG Electronics

76, Seongsan-dong, Changwon City, Gyeongnam, 641-713, Korea

CHASSIS CODE: UXA

Outdoor Unit

ARUM140LTE5 / ARUM160LTE5
ARUM180LTE5 / ARUM200LTE5
ARUM220LTE5 / ARUM240LTE5
ARUM260LTE5

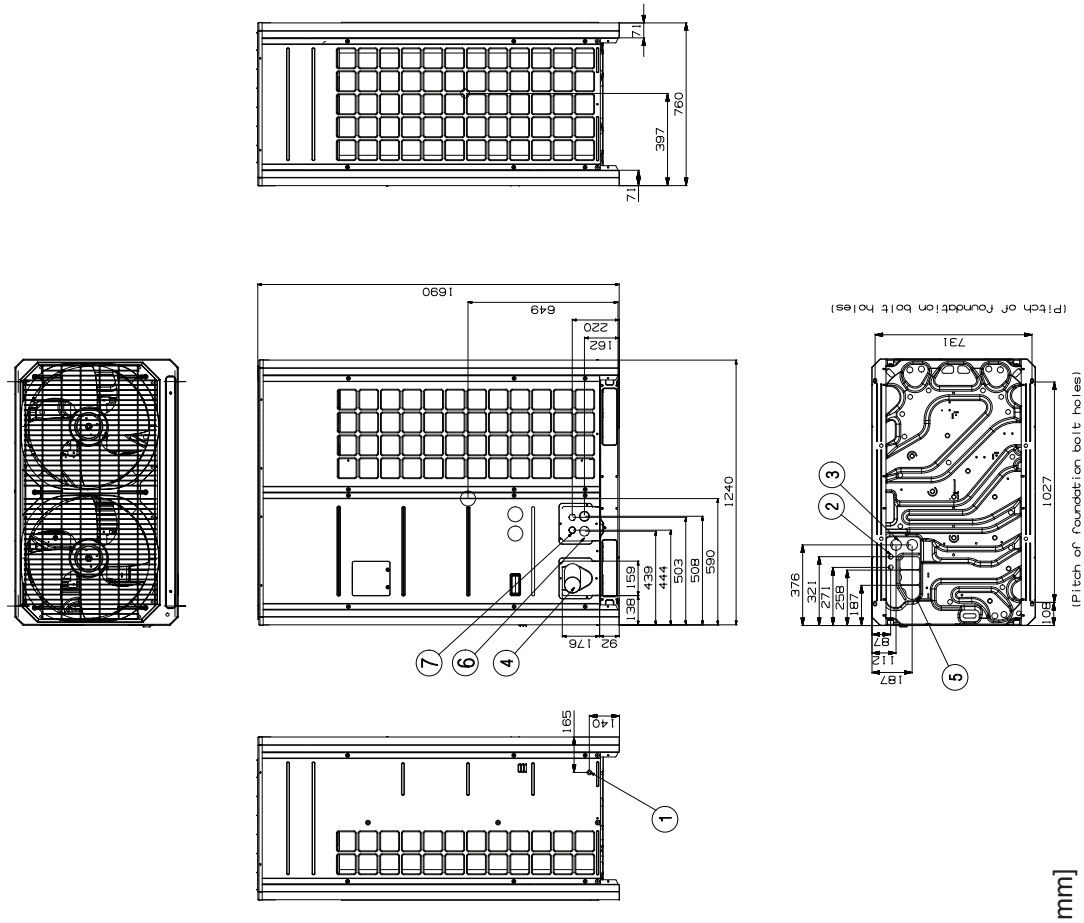

No.	Part Name	Description
5	Pipe routing hole(bottom)	-
4	Pipe routing hole(front)	-
3	Power cord routing hole(bottom)	2- Ø 50
2	Wire routing hole(bottom)	2- Ø 22.2
1	Leakage test hole(side)	Ø 22.2

[Unit : mm]

76, Seongsan-dong, Changwon City, Gyeongnam,
641-713, Korea

CHASSIS CODE: UXB

LG Electronics

6. Piping Diagrams

4.1.1 8~16HP

Heat Recovery – Cooling Mode

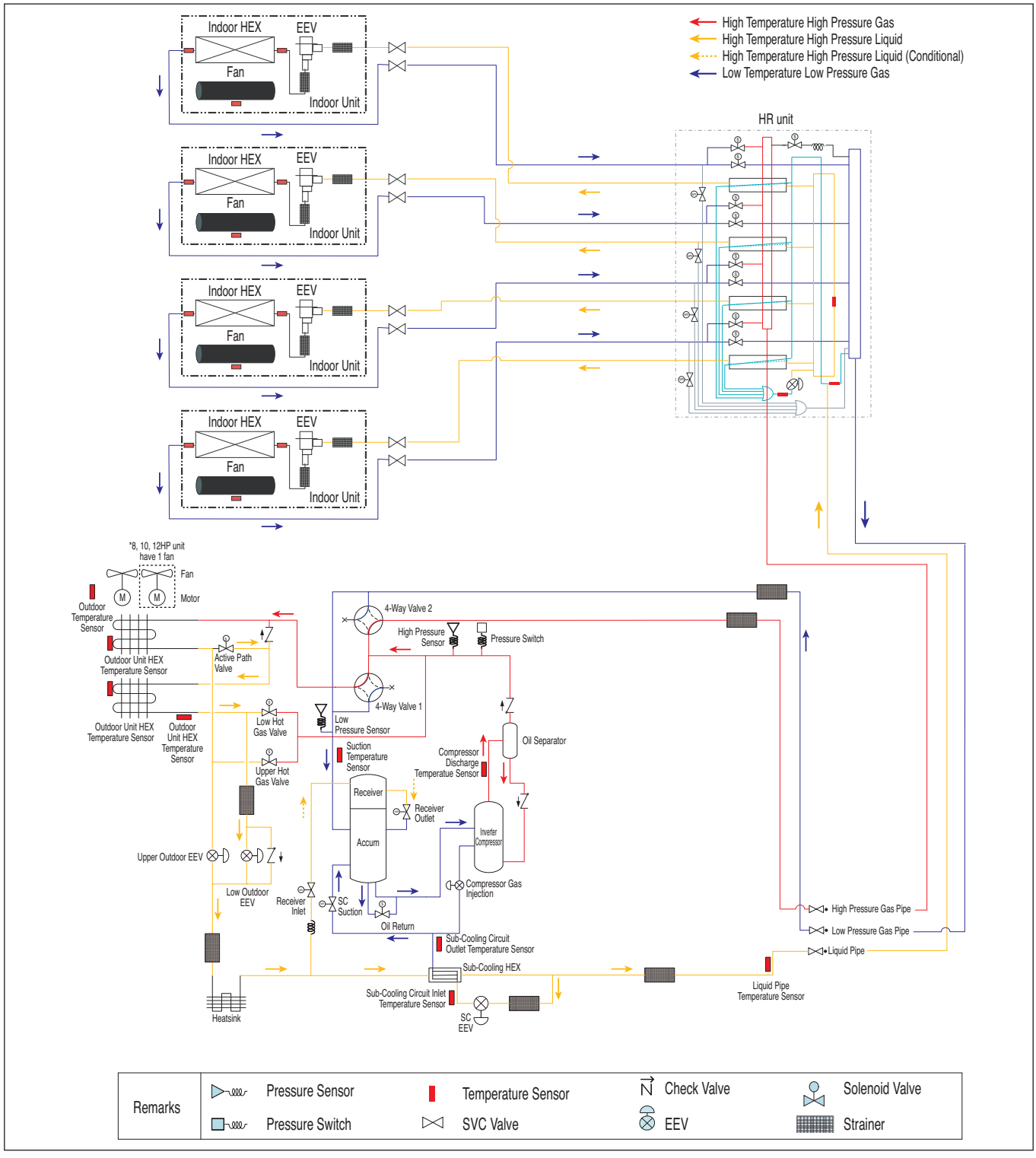

Heat Recovery – Heating Mode

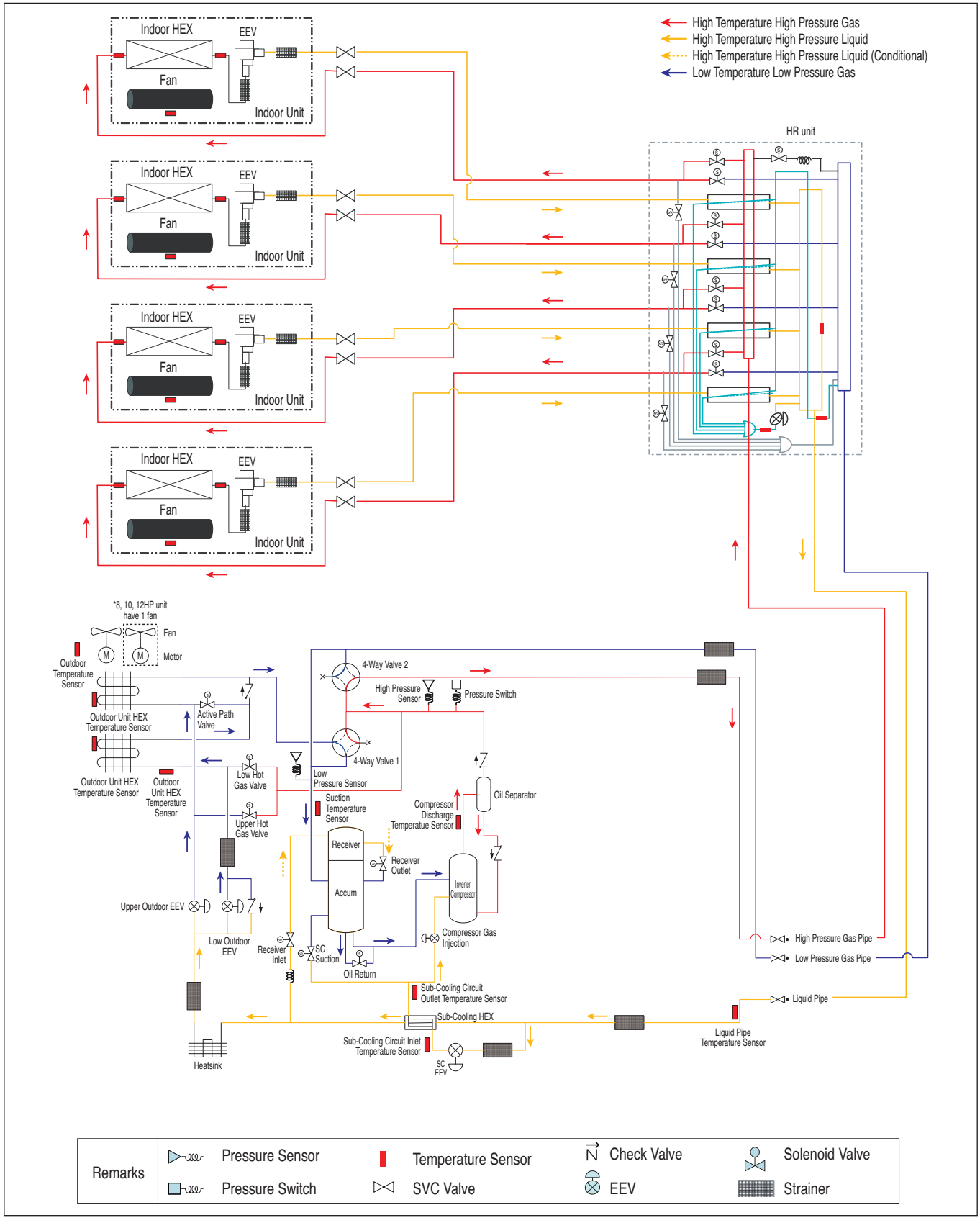

Heat Recovery – Oil Return and Defrost Operation

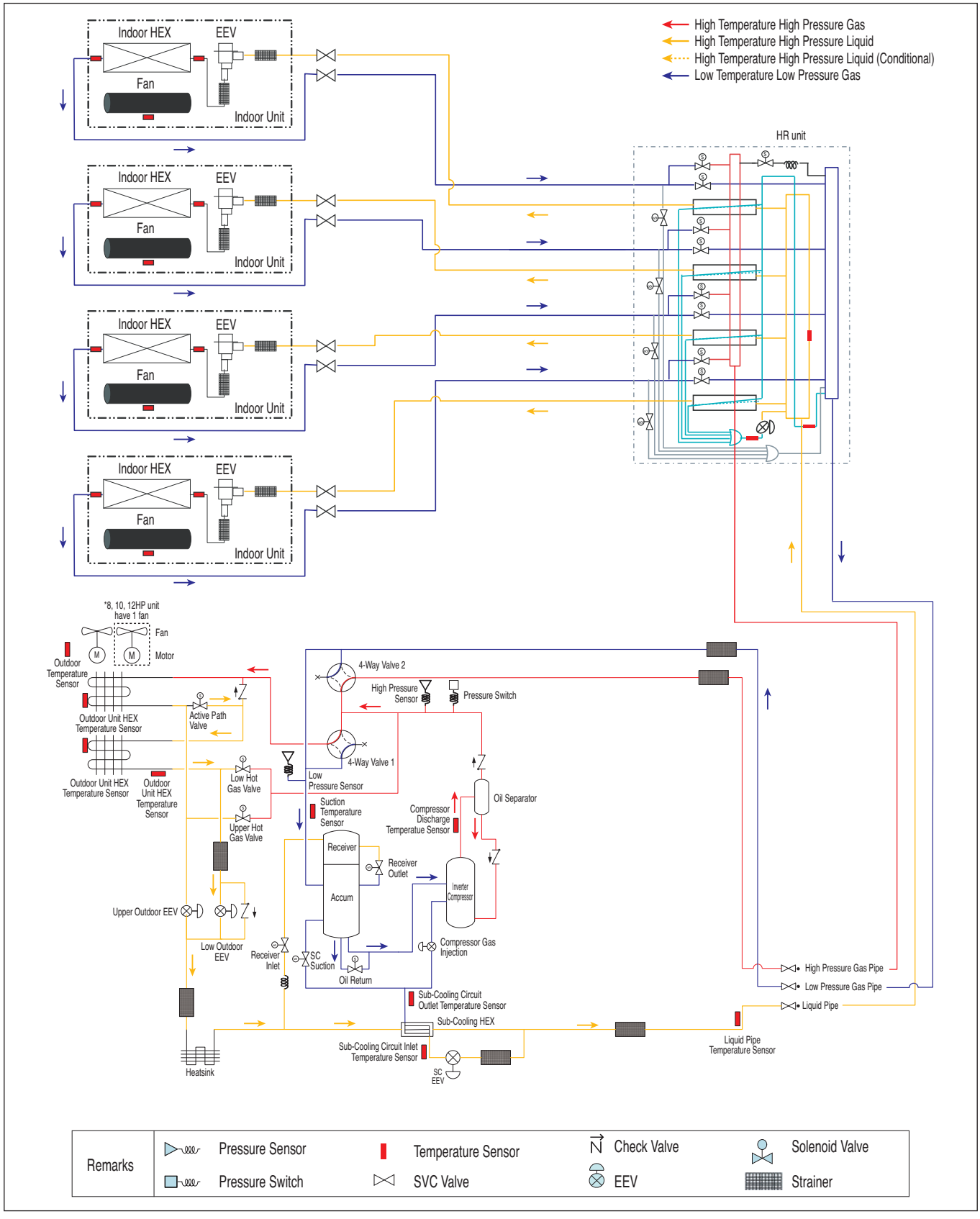

Heat Recovery – Cooling-based Simul. Operation

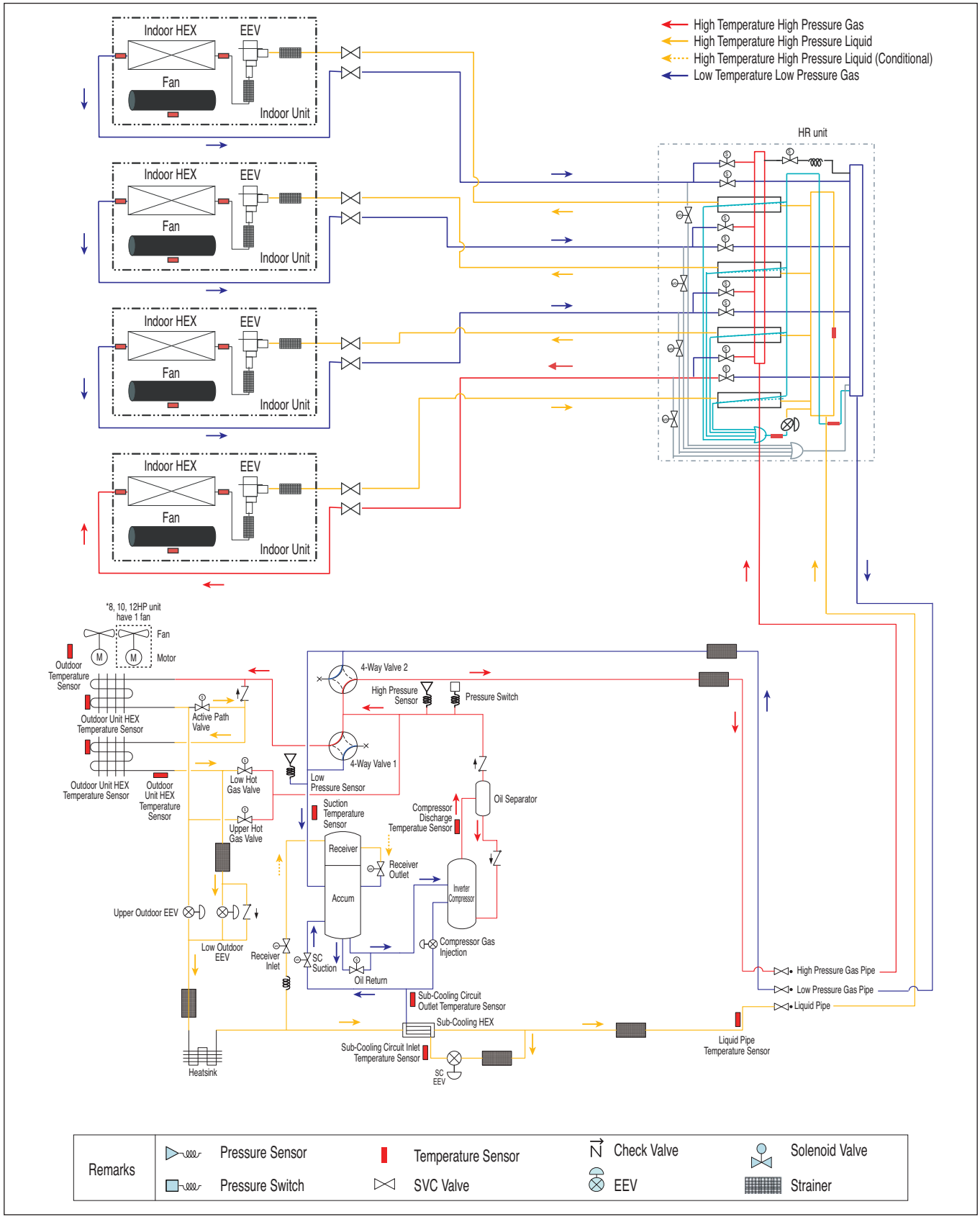

Heat Recovery – Heating-based Simul. Operation

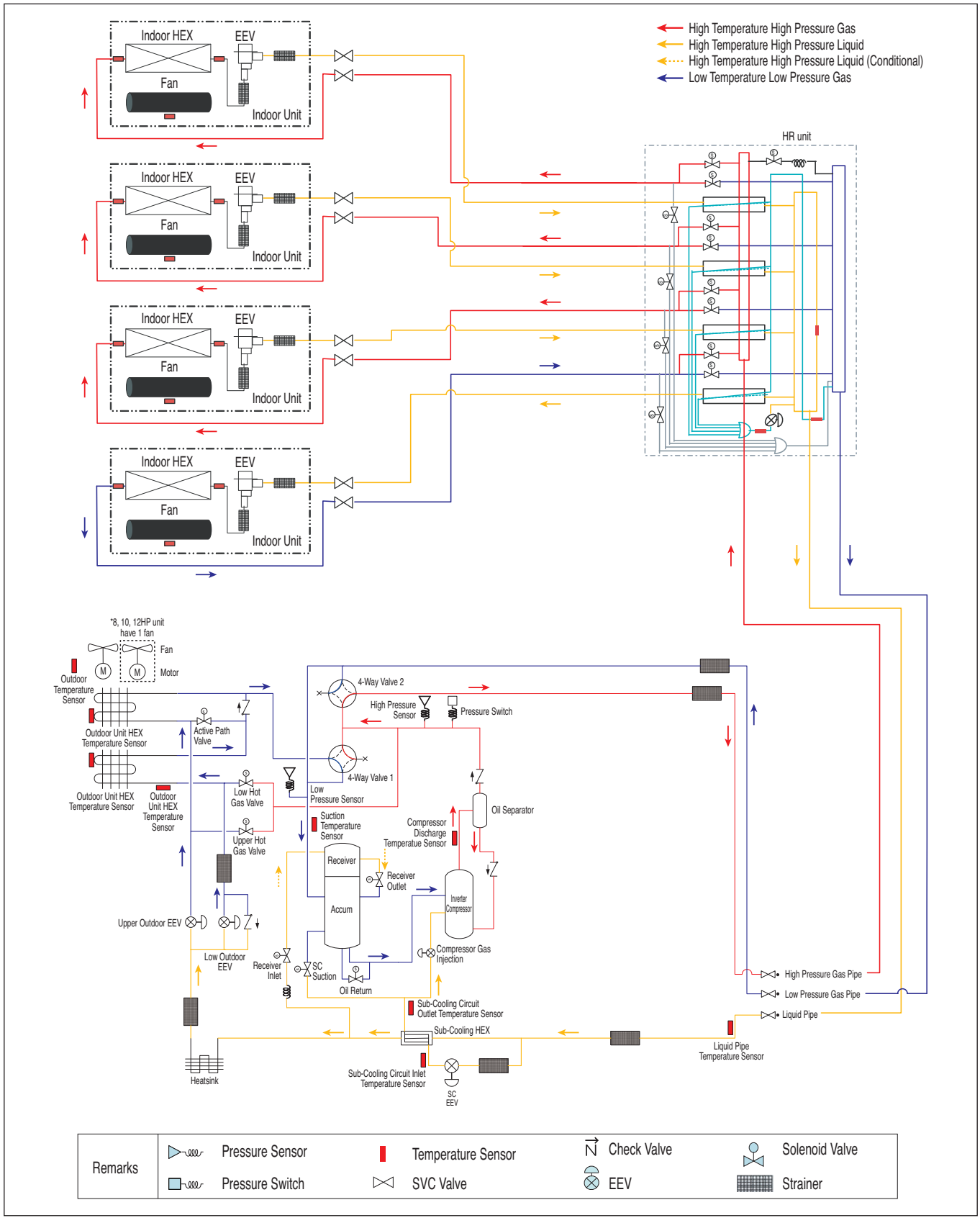

Heat Recovery – Balanced Simul. Operation

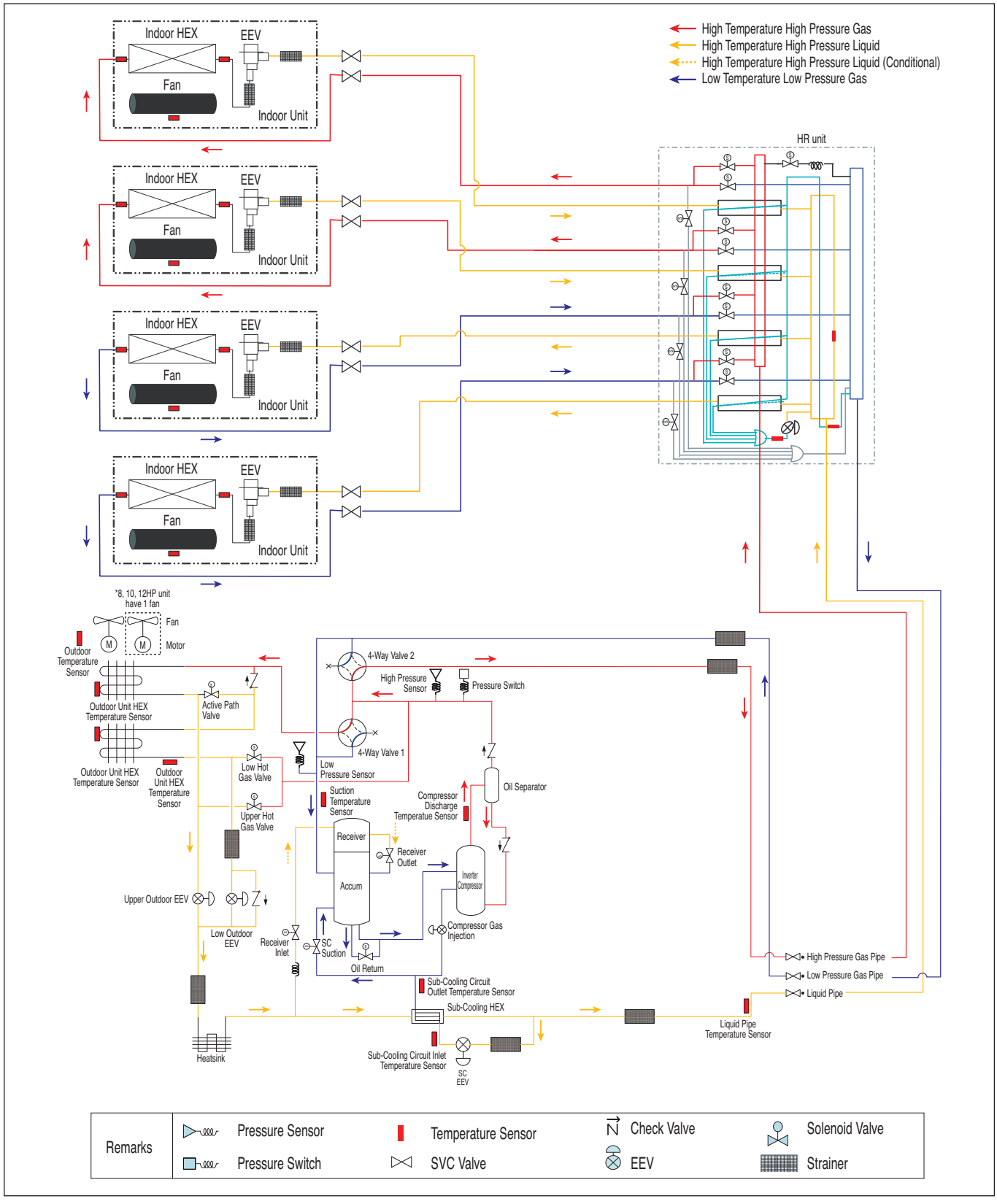

Heat Recovery – Upper HEX Defrost Operation

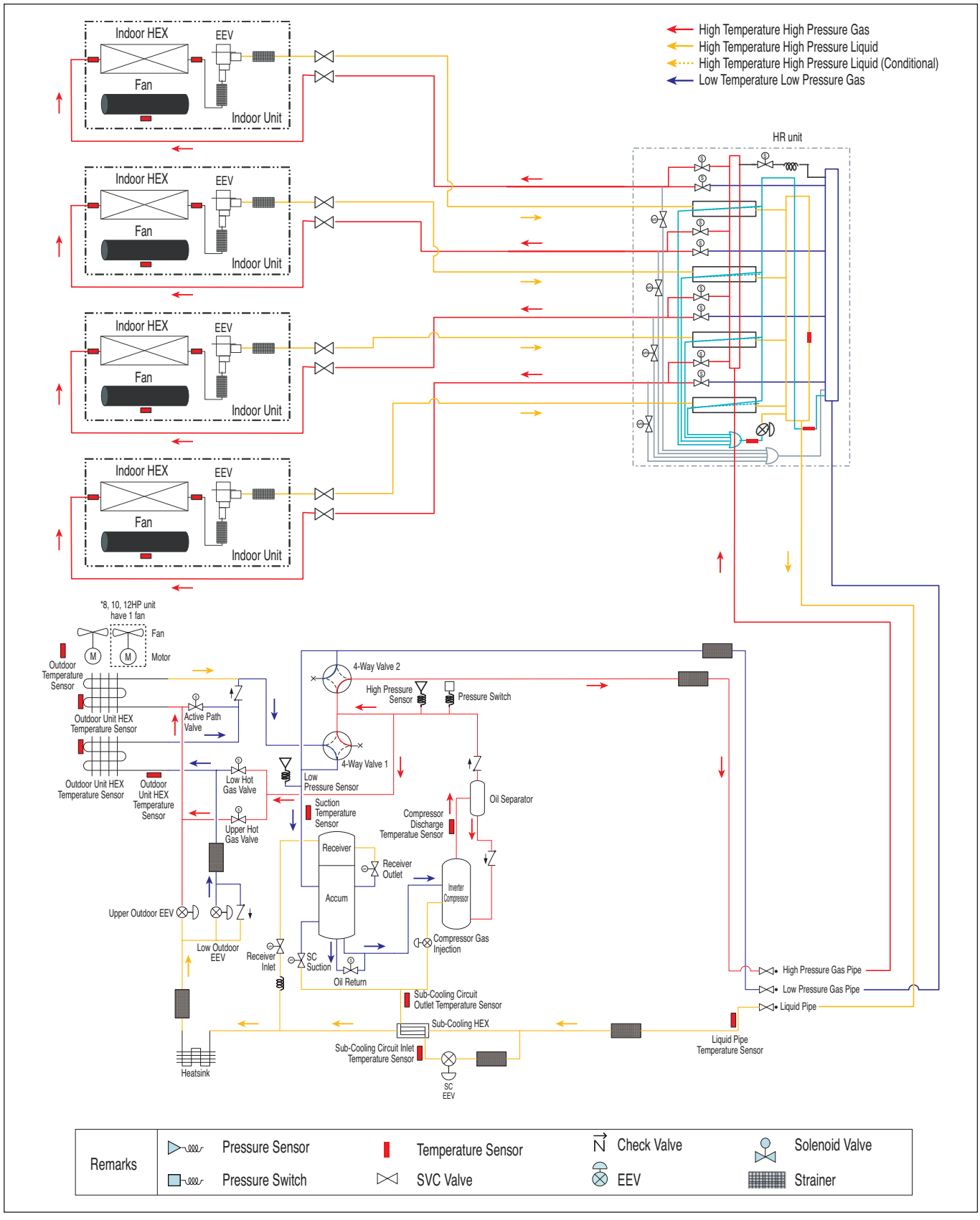

Heat Recovery – Low HEX Defrost Operation

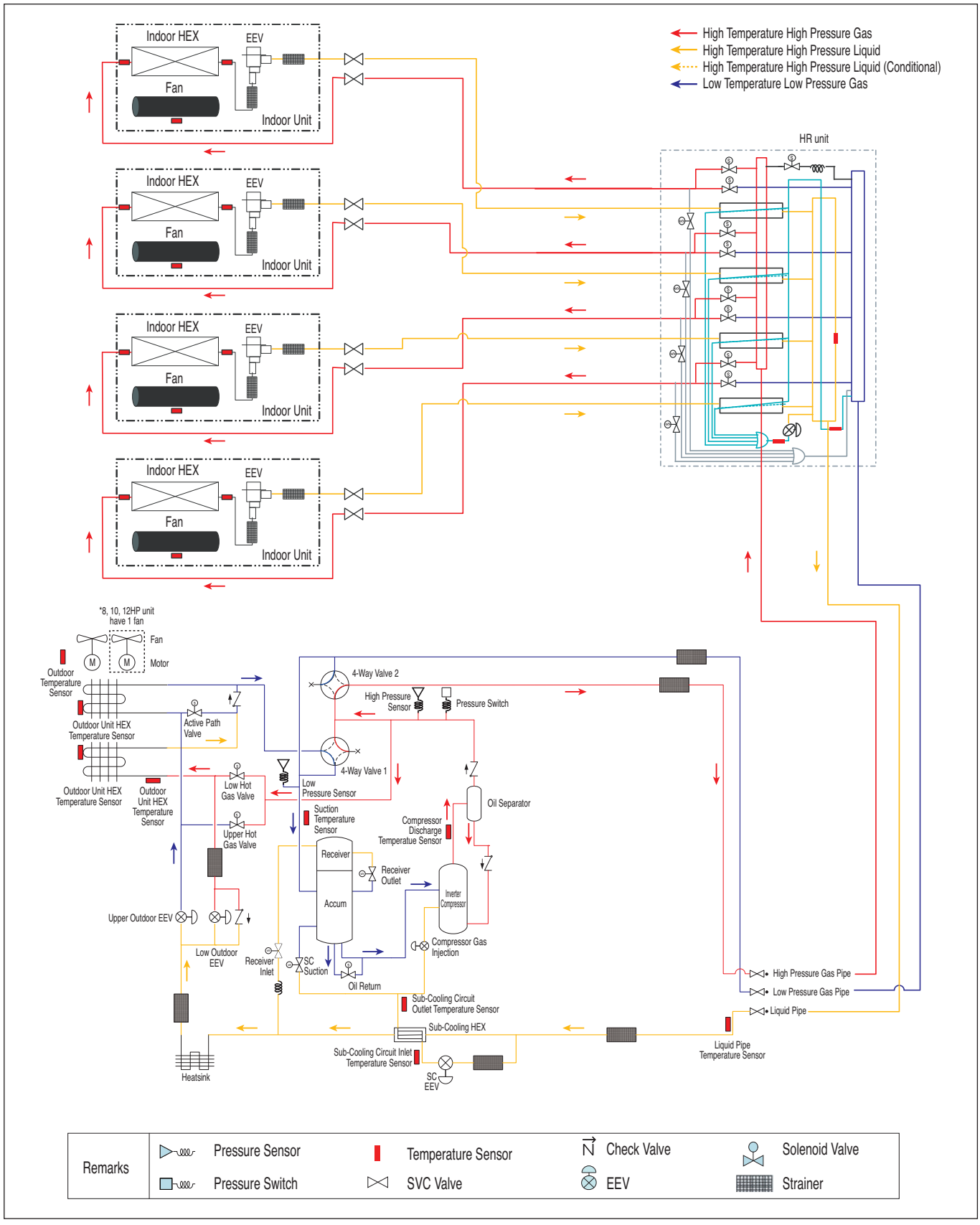

Heat Pump – Cooling Mode

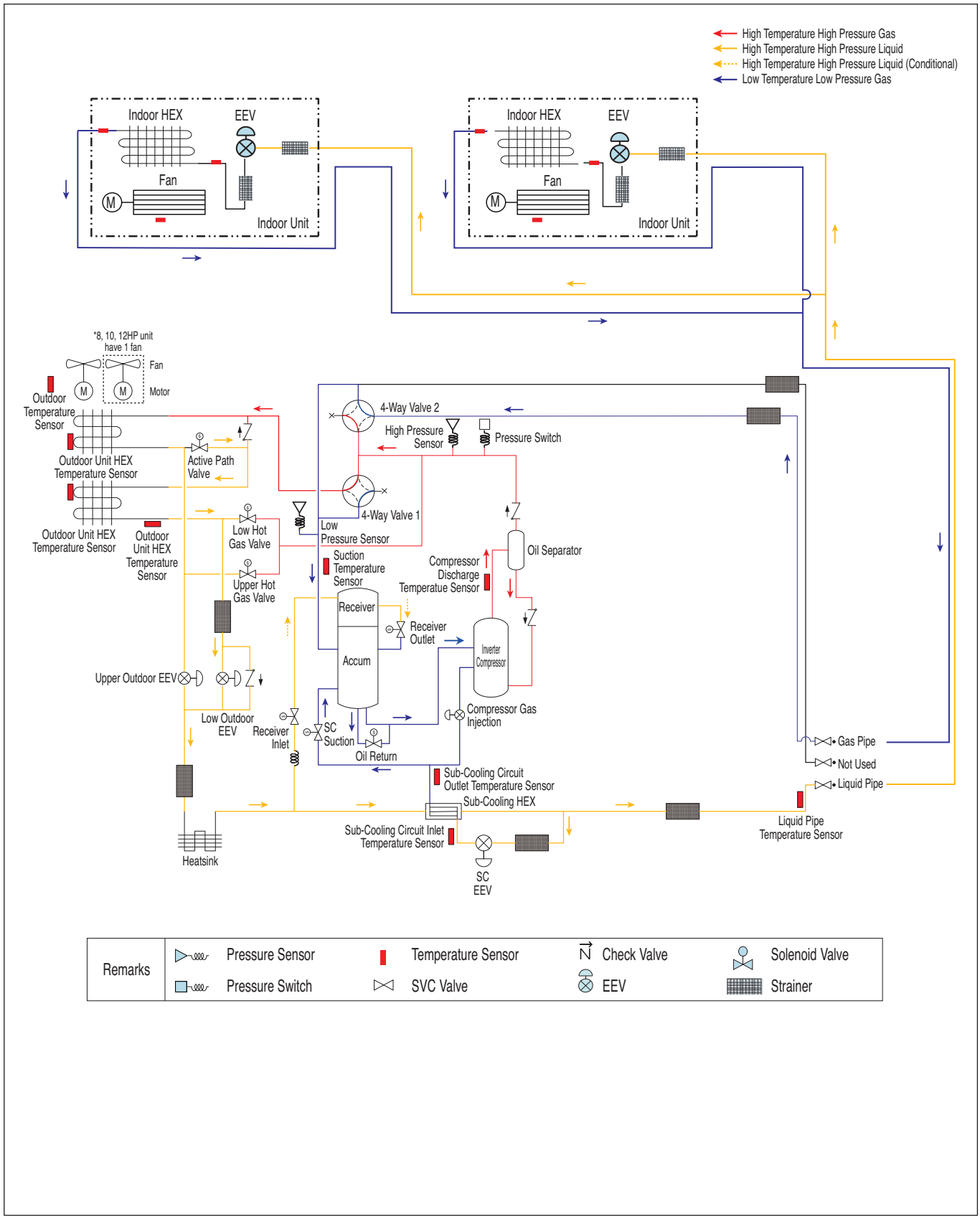

Heat Pump – Heating Mode

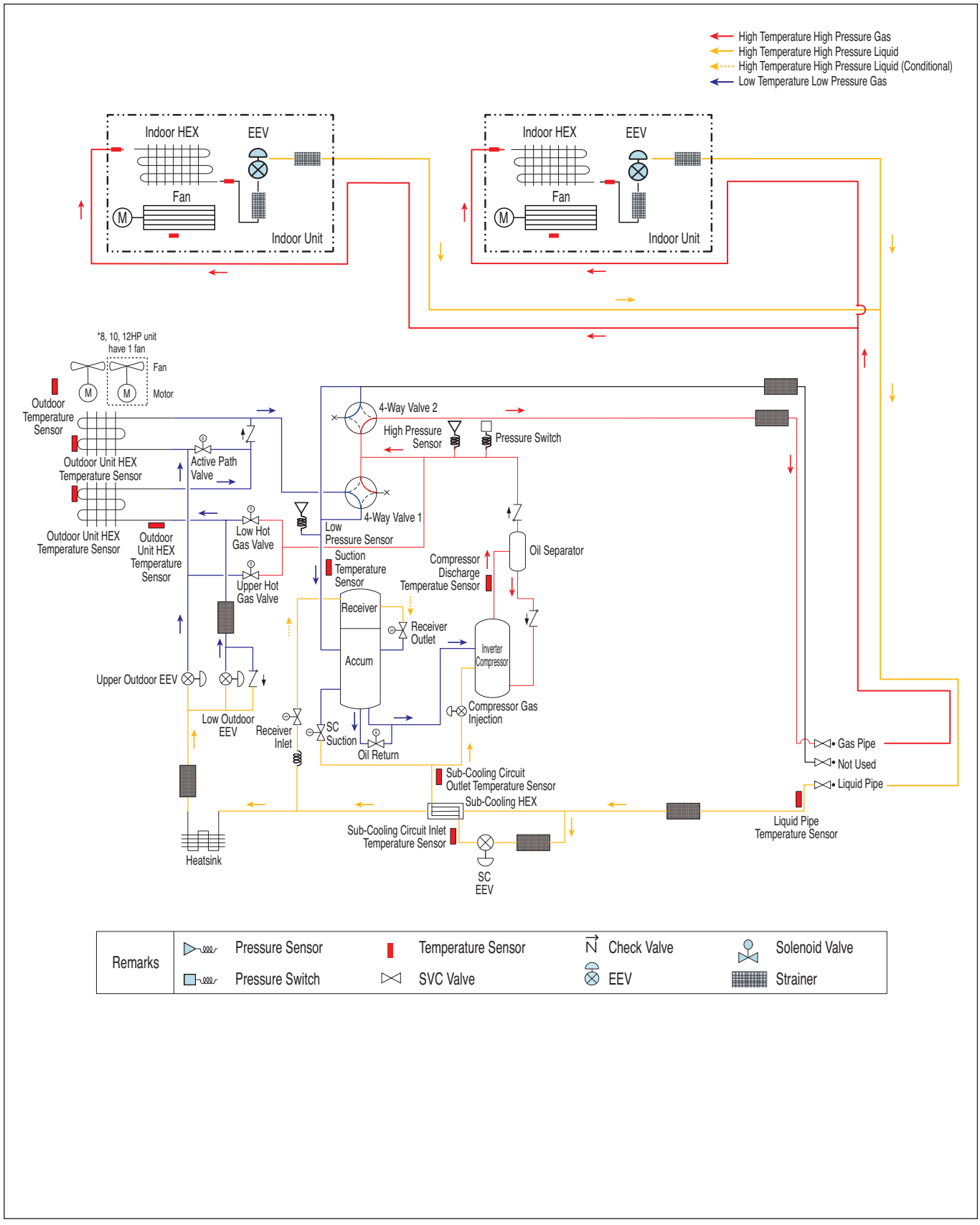

Heat Pump – Oil Return and Defrost Operation

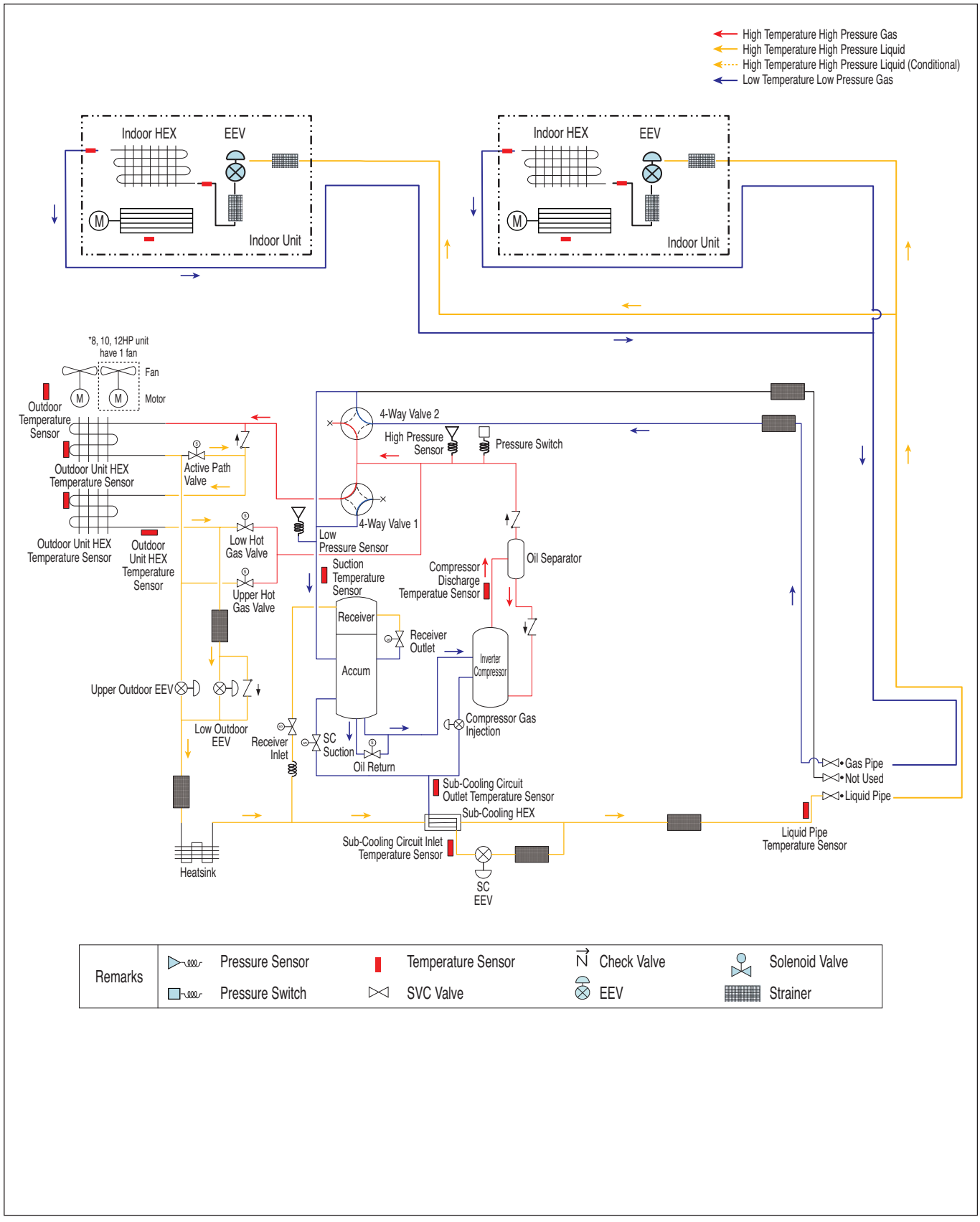

Heat Pump – Upper HEX Defrost Operation

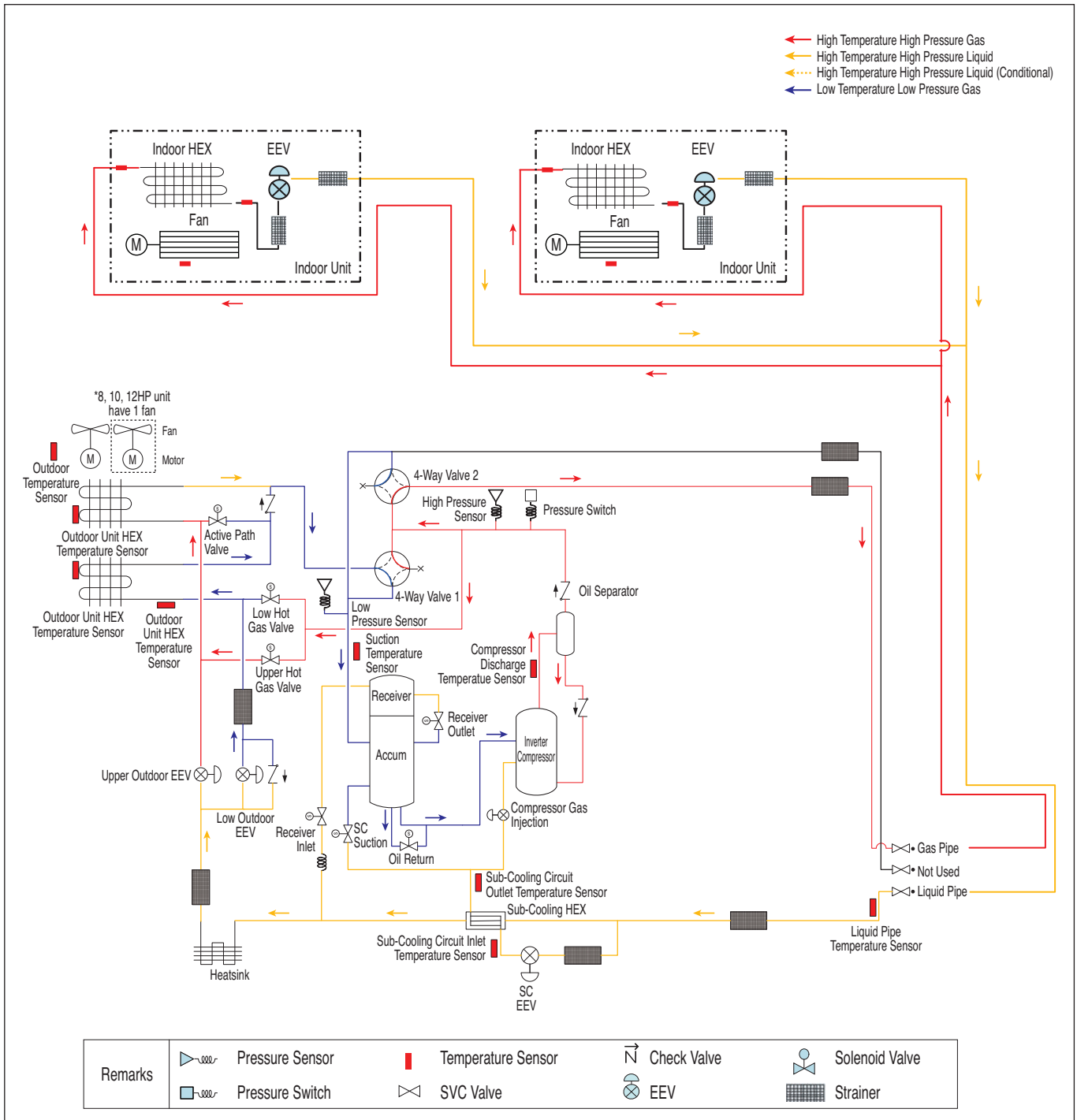

Heat Pump – Low HEX Defrost Operation

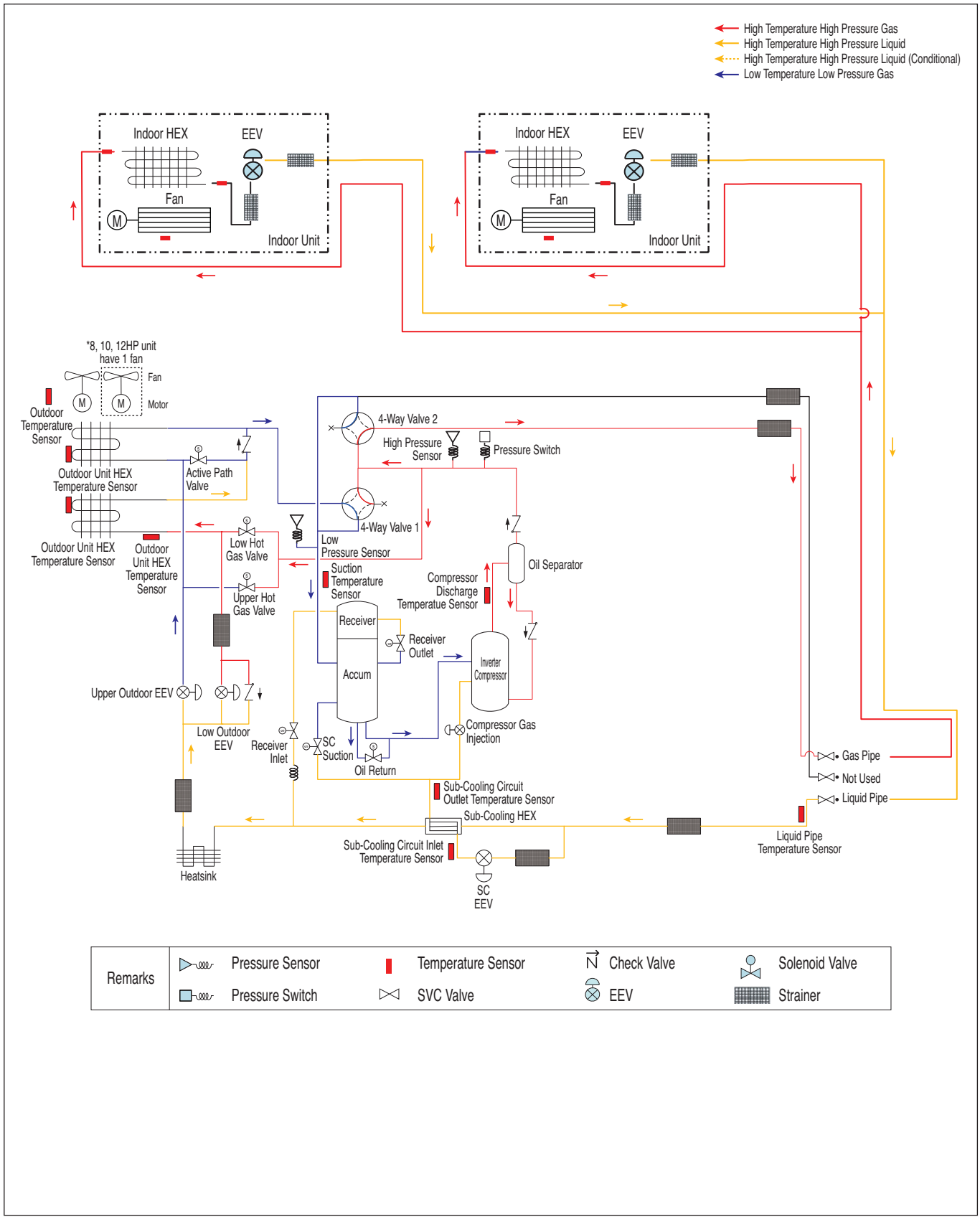

4.1.2 18~26HP

Heat Recovery – Cooling Mode

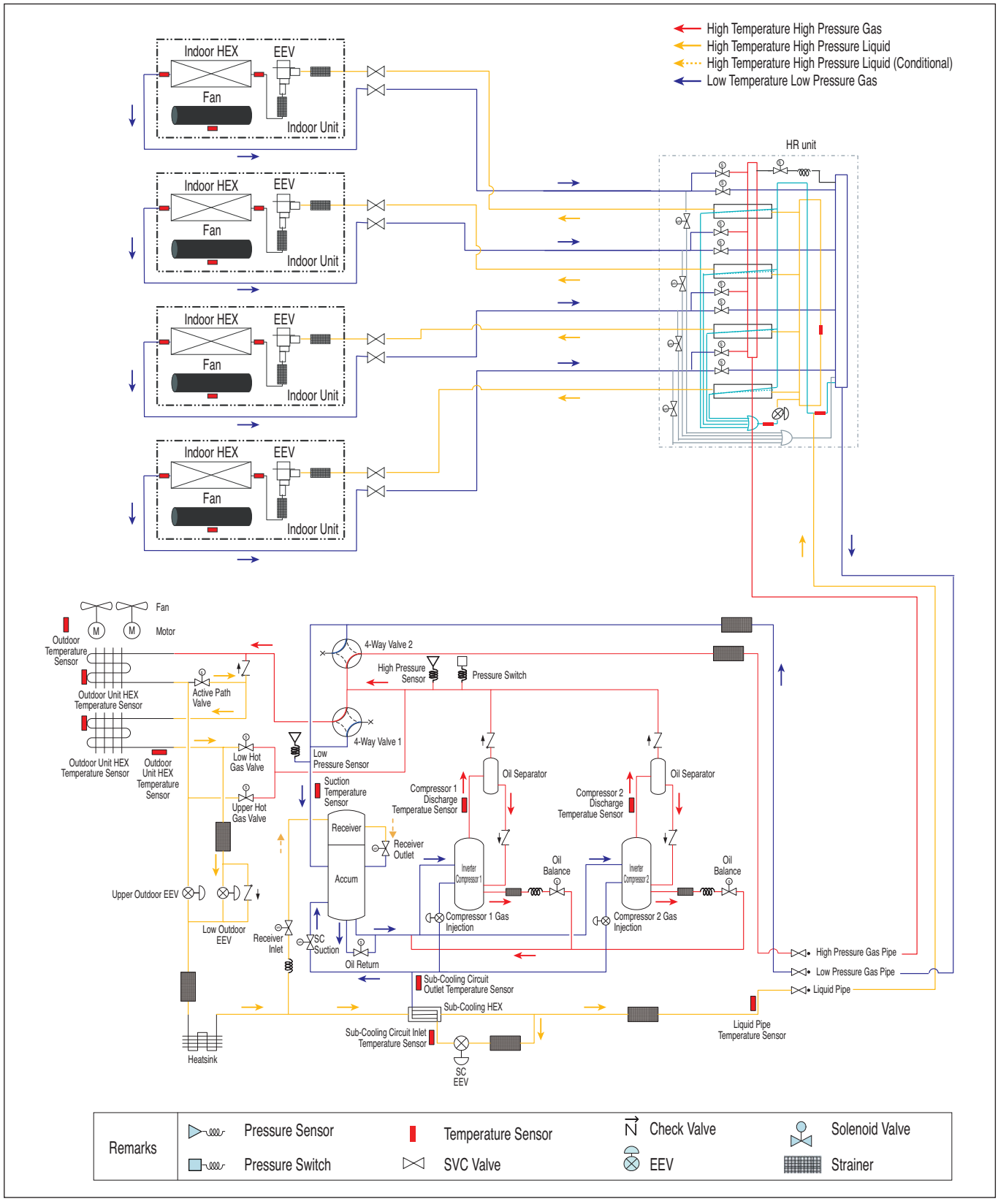

Heat Recovery – Heating Mode

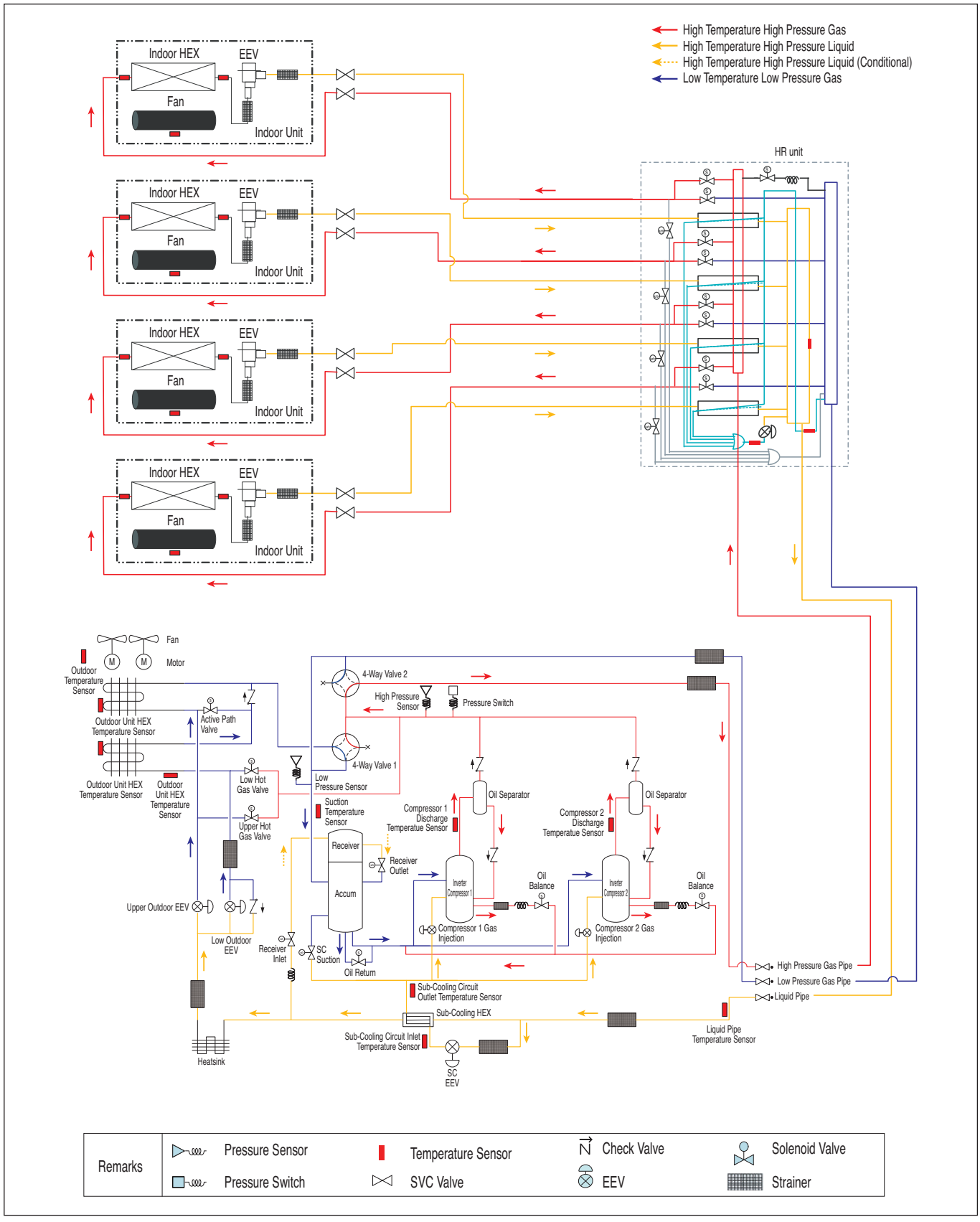

Heat Recovery – Oil Return and Defrost Operation

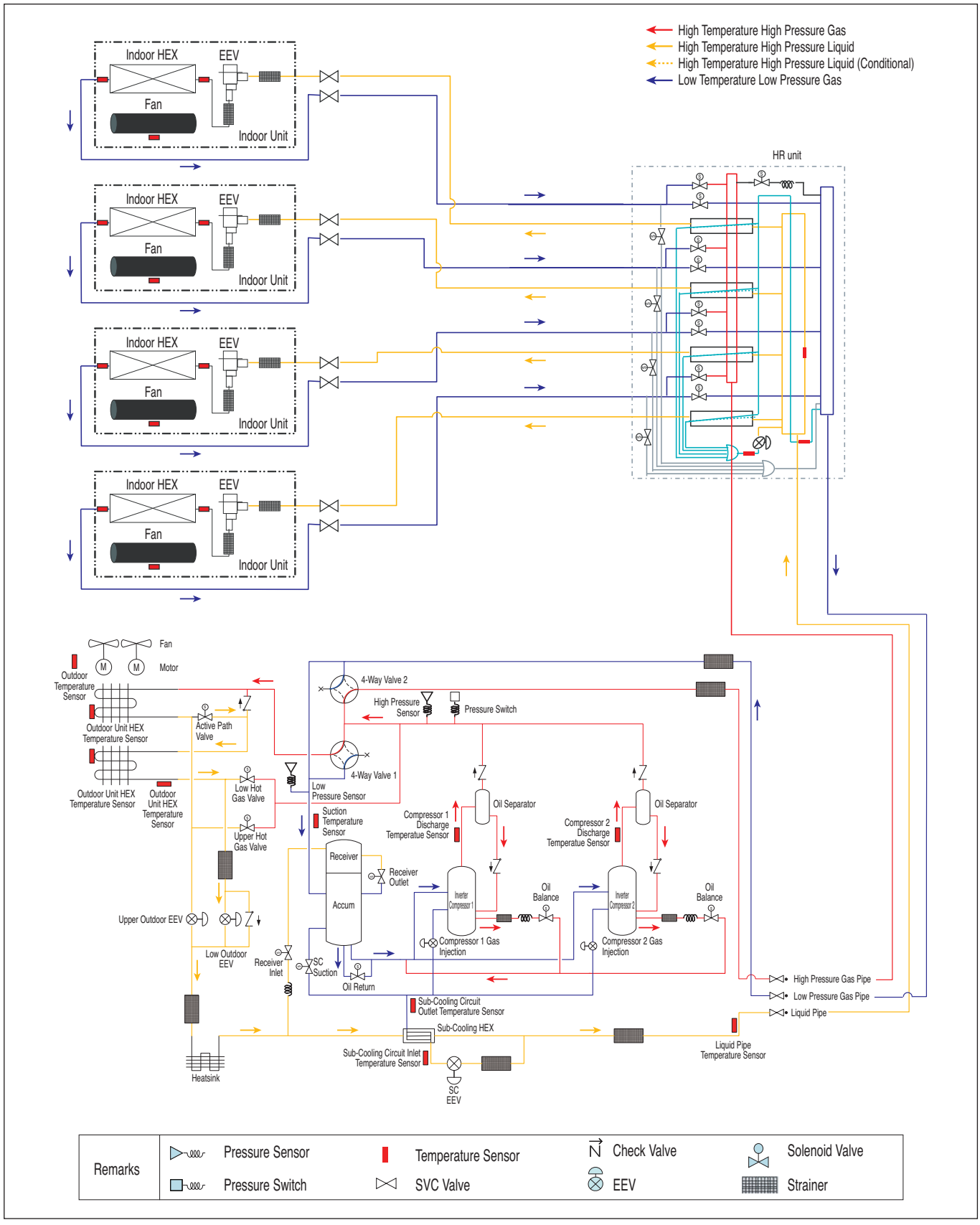

Heat Recovery – Cooling-based Simul. Operation

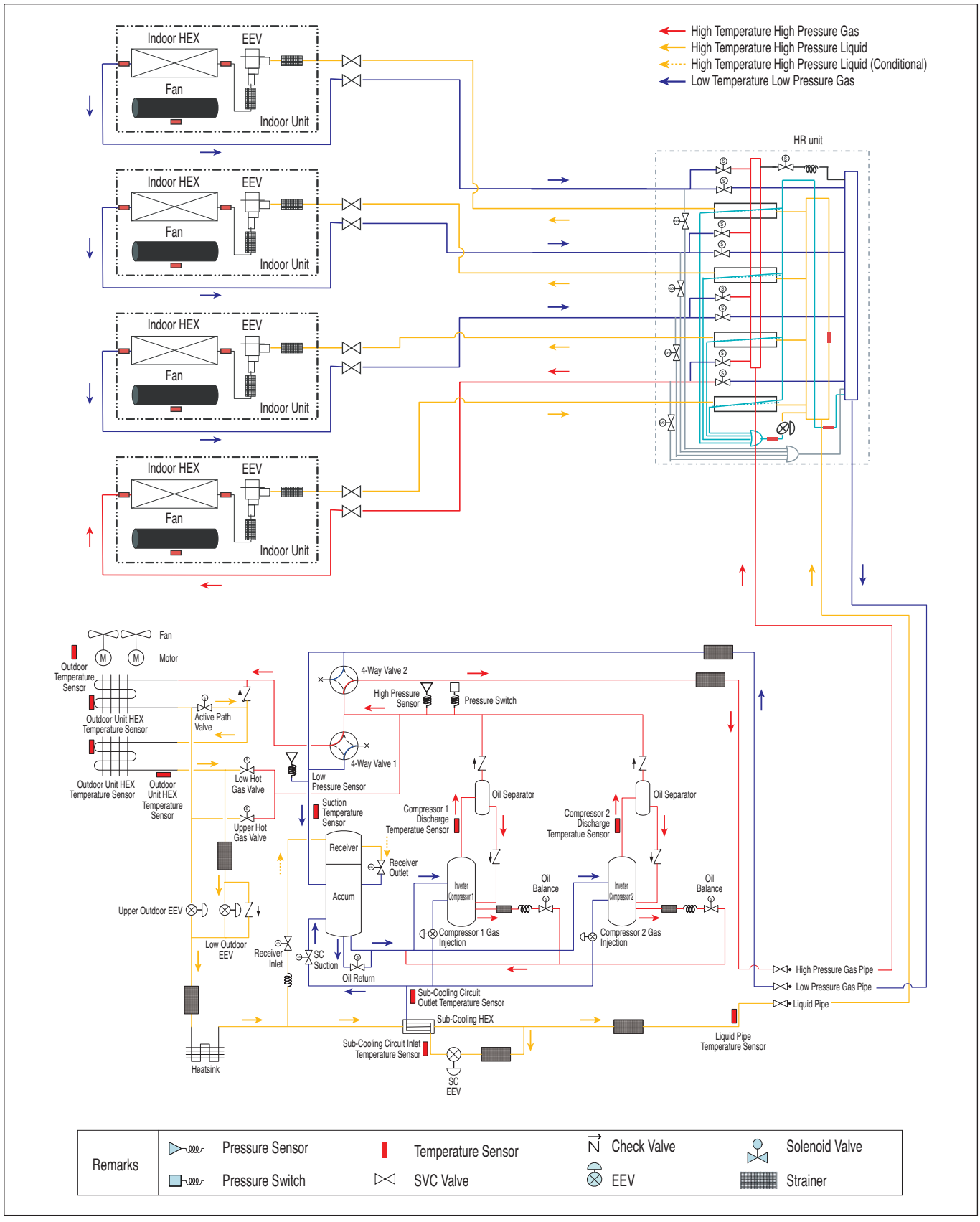

Heat Recovery – Heating-based Simul. Operation

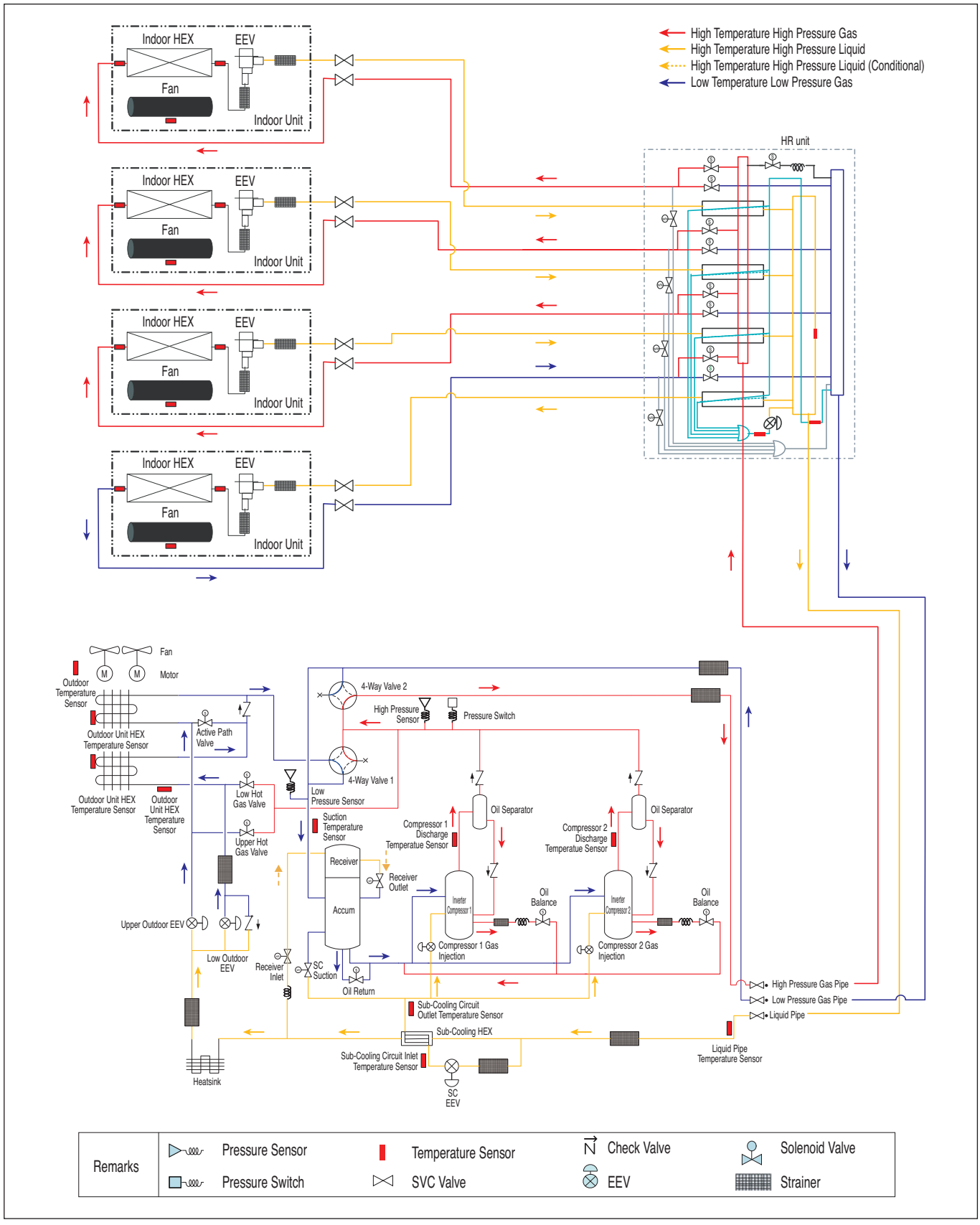

Heat Recovery – Balanced Simul. Operation

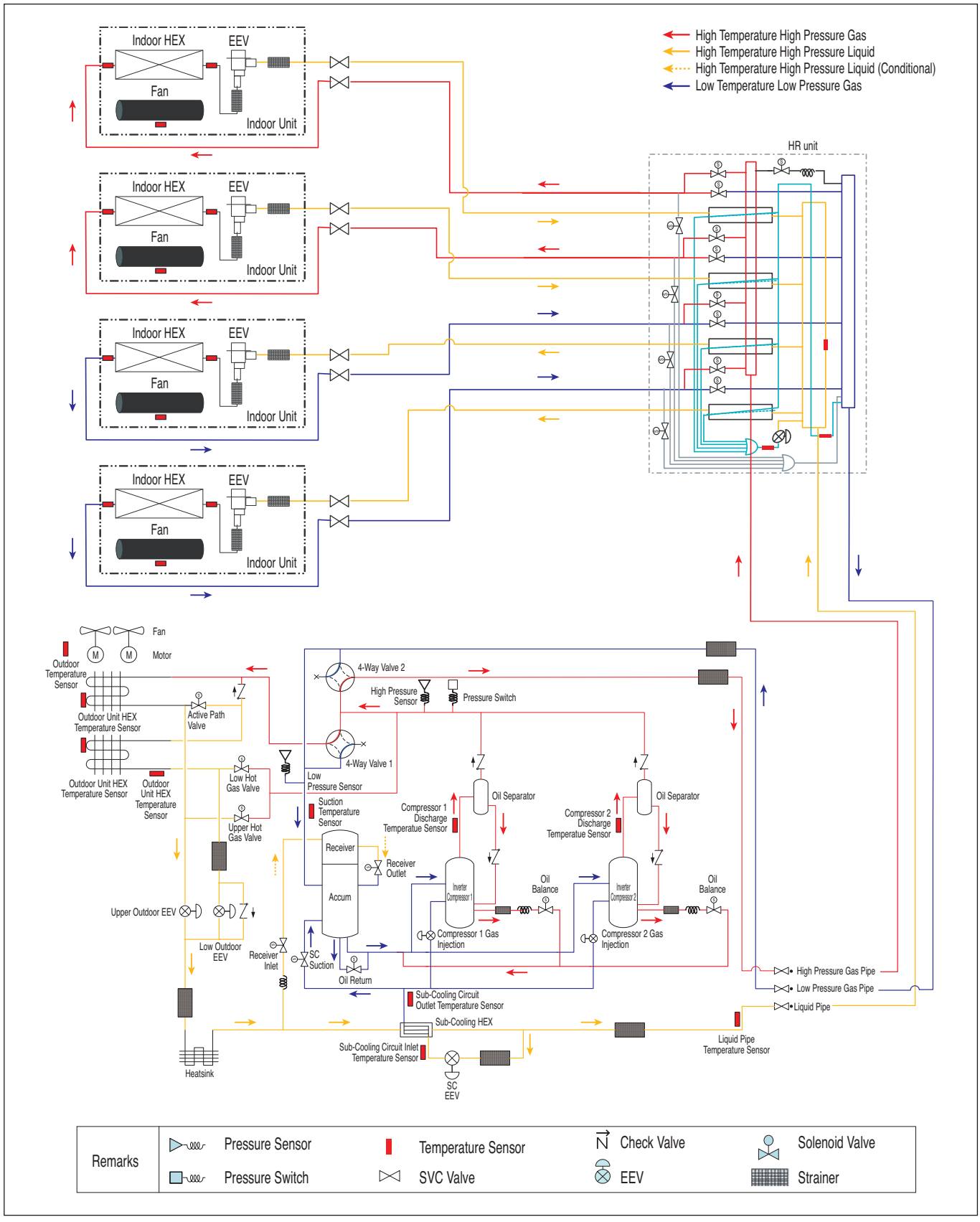

Heat Recovery – Upper HEX Defrost Operation

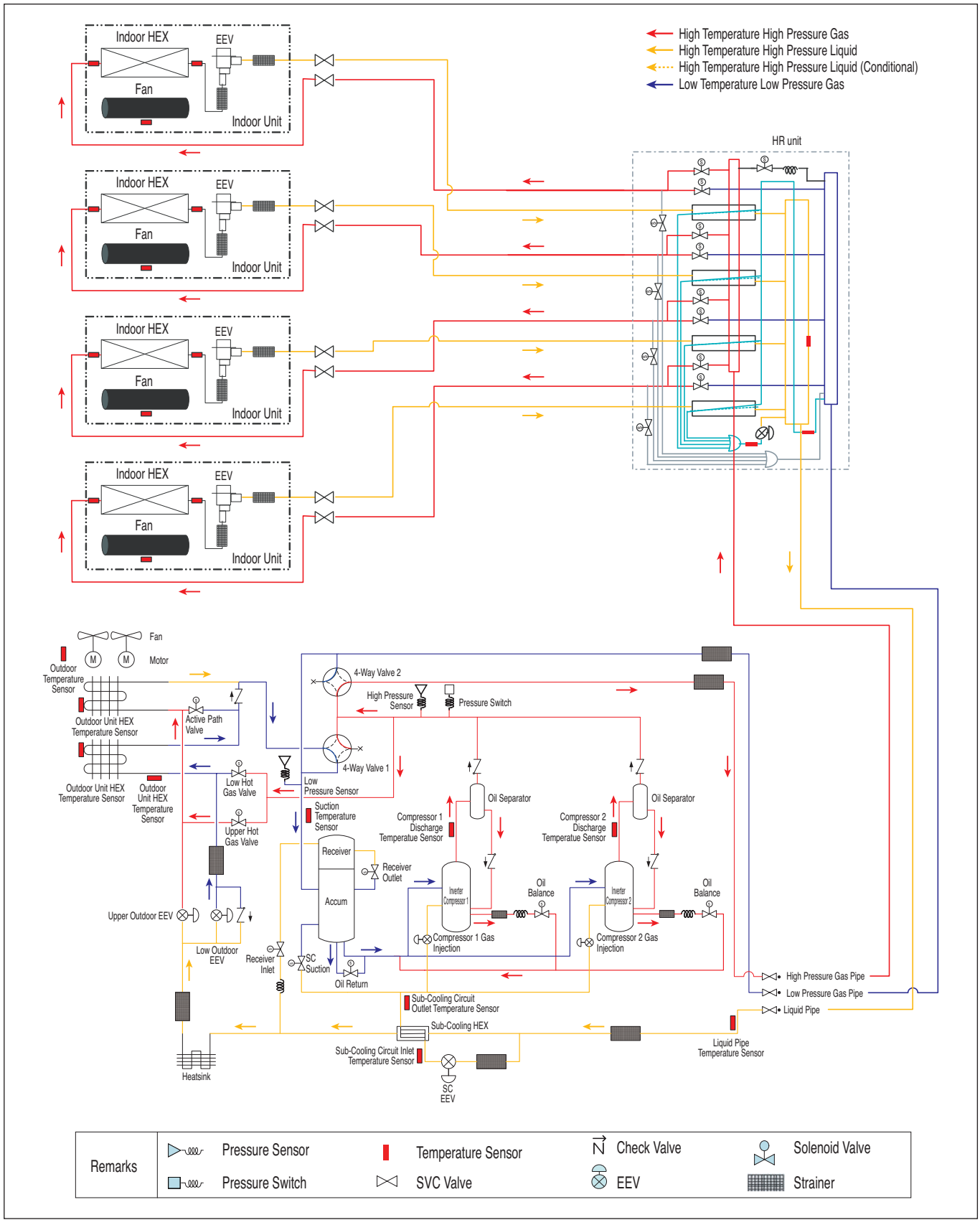

Heat Recovery – Low HEX Defrost Operation

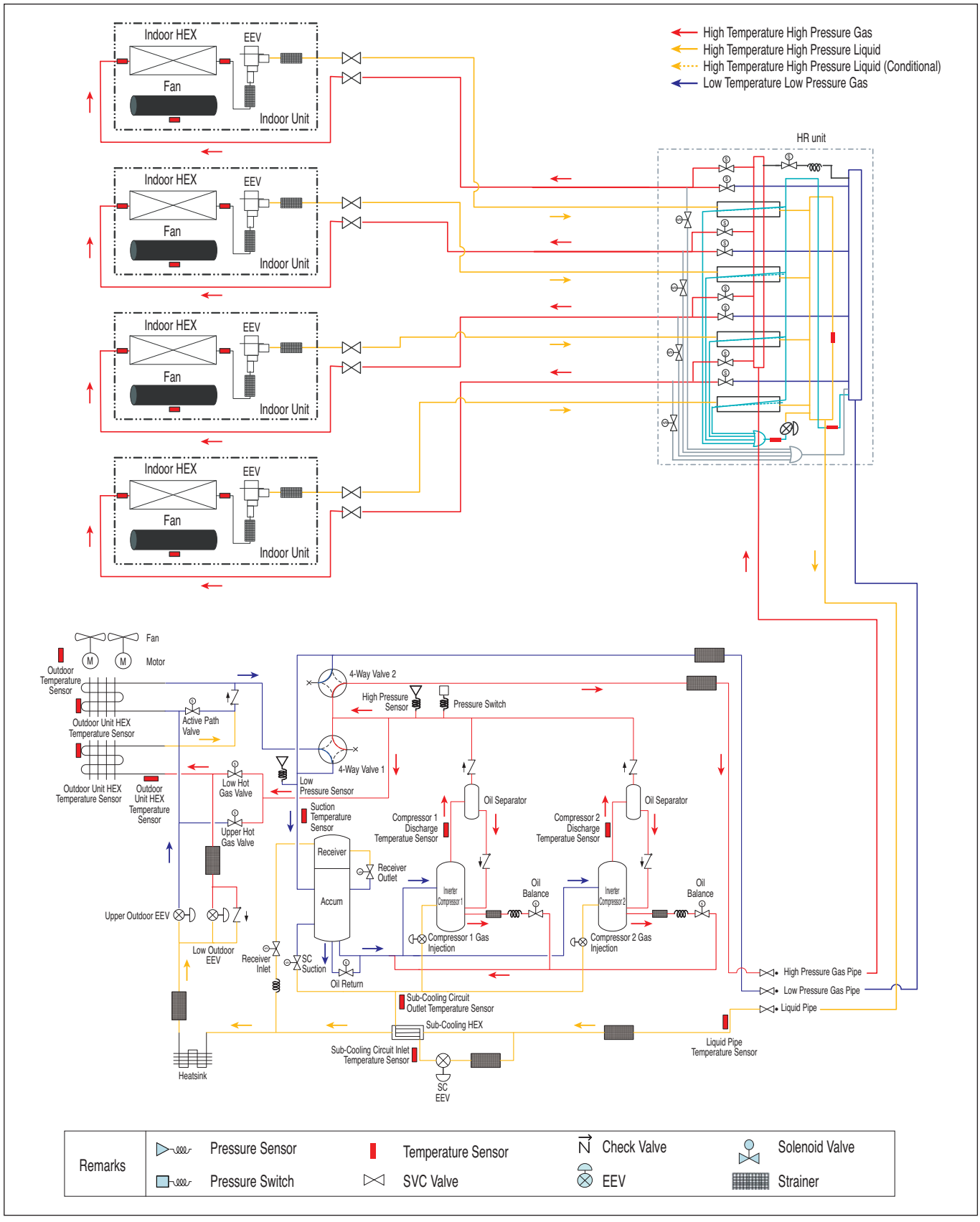

Heat Pump – Cooling Mode

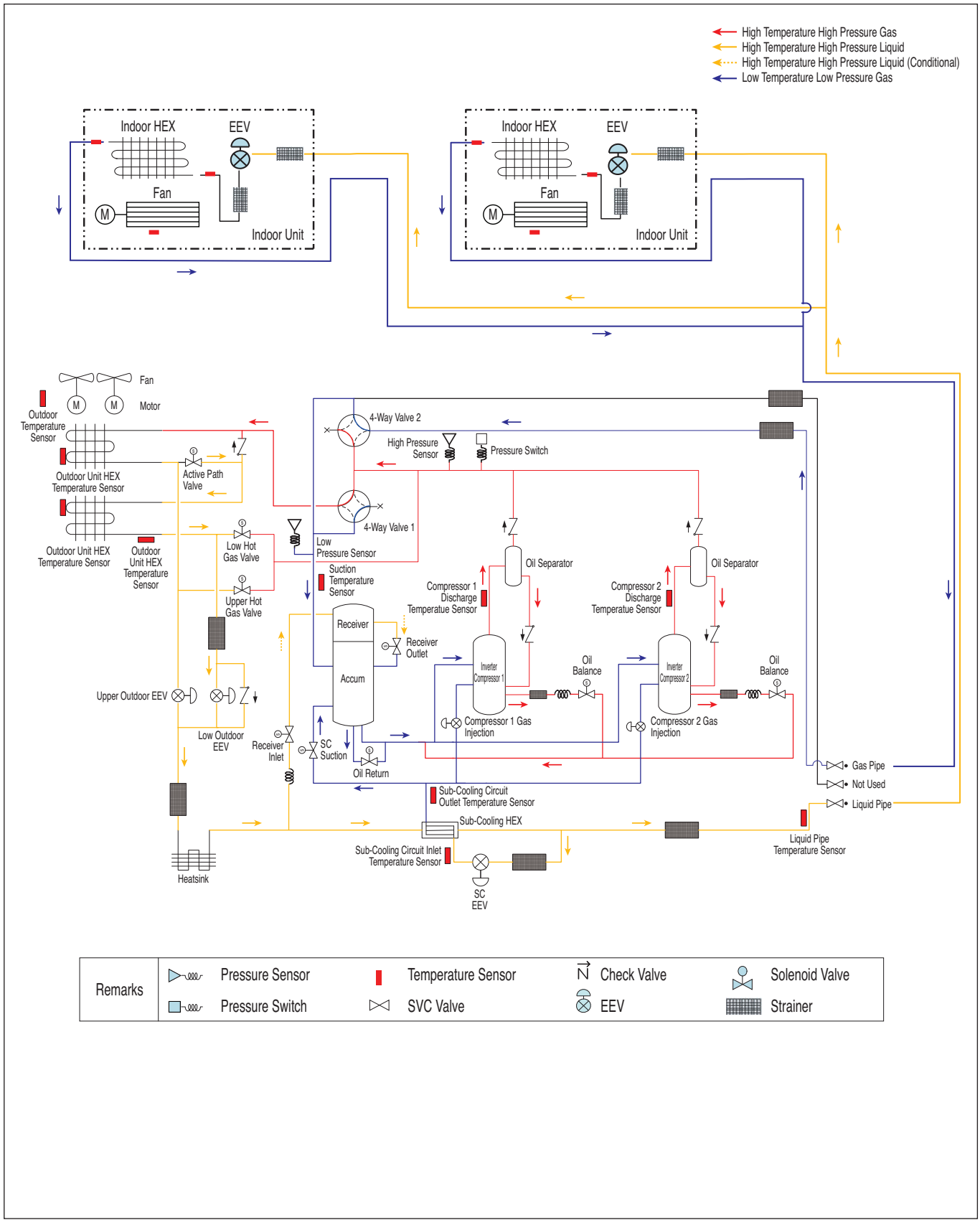

Heat Pump – Heating Mode

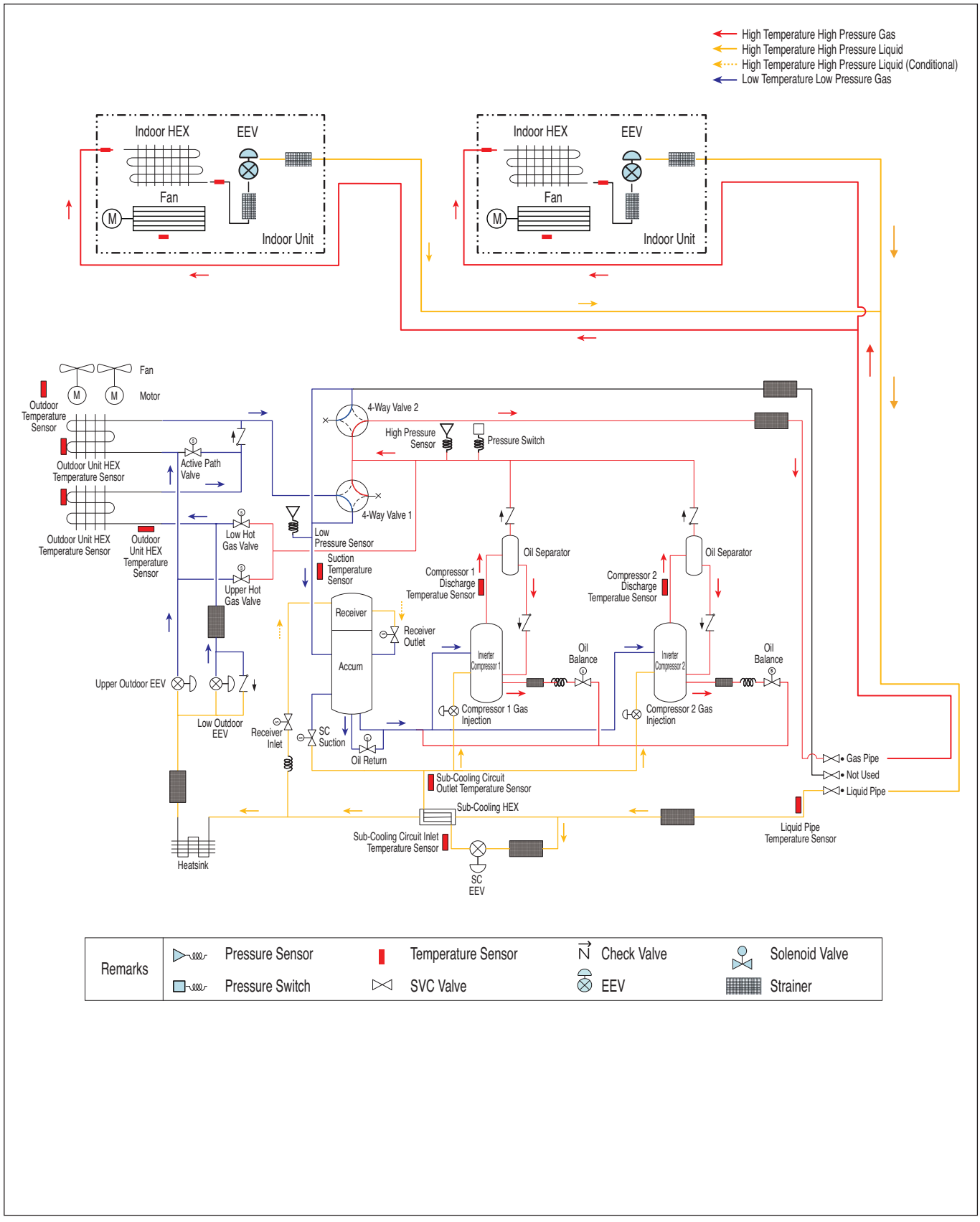

Heat Pump – Oil Return and Defrost Operation

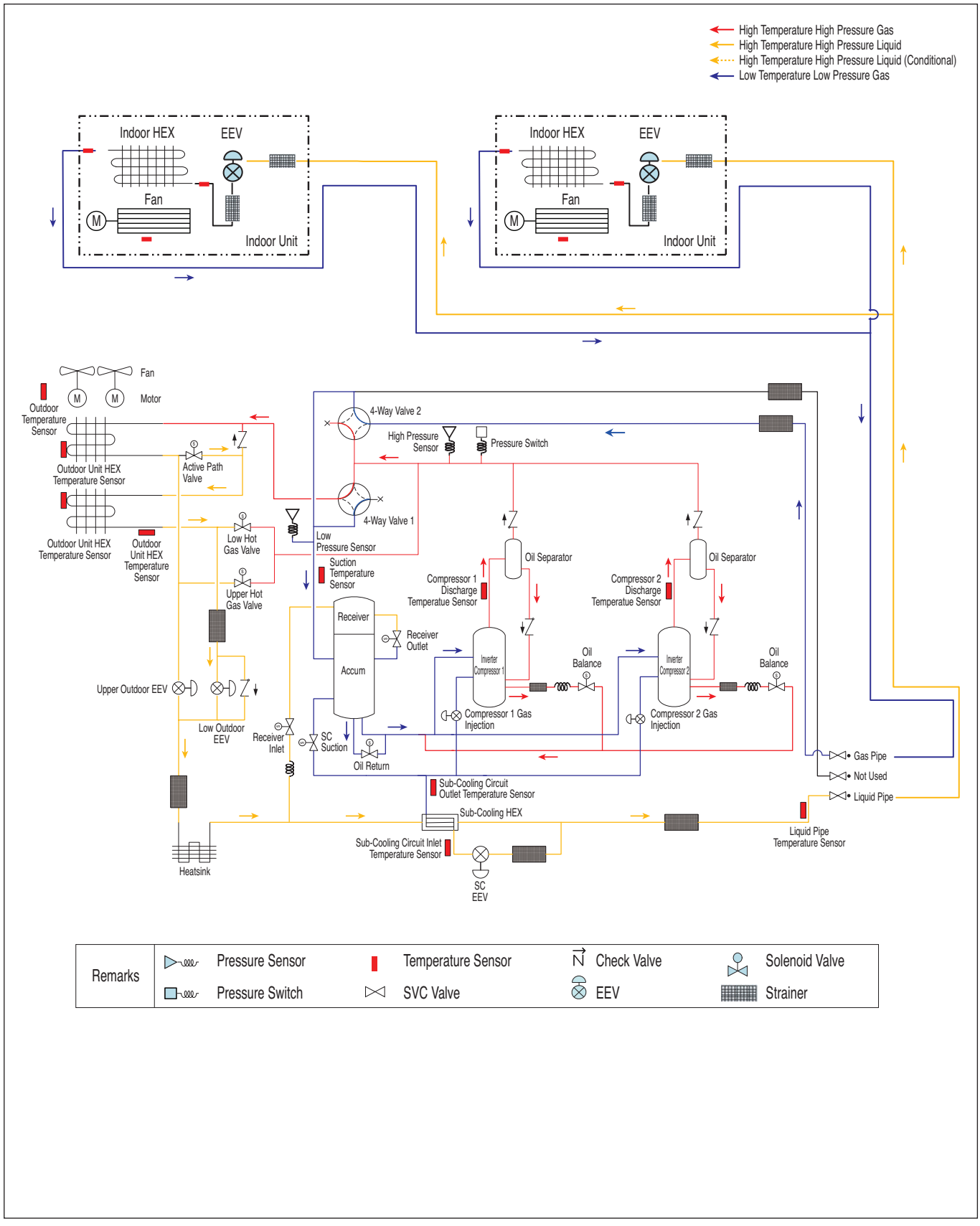

Heat Pump – Upper HEX Defrost Operation

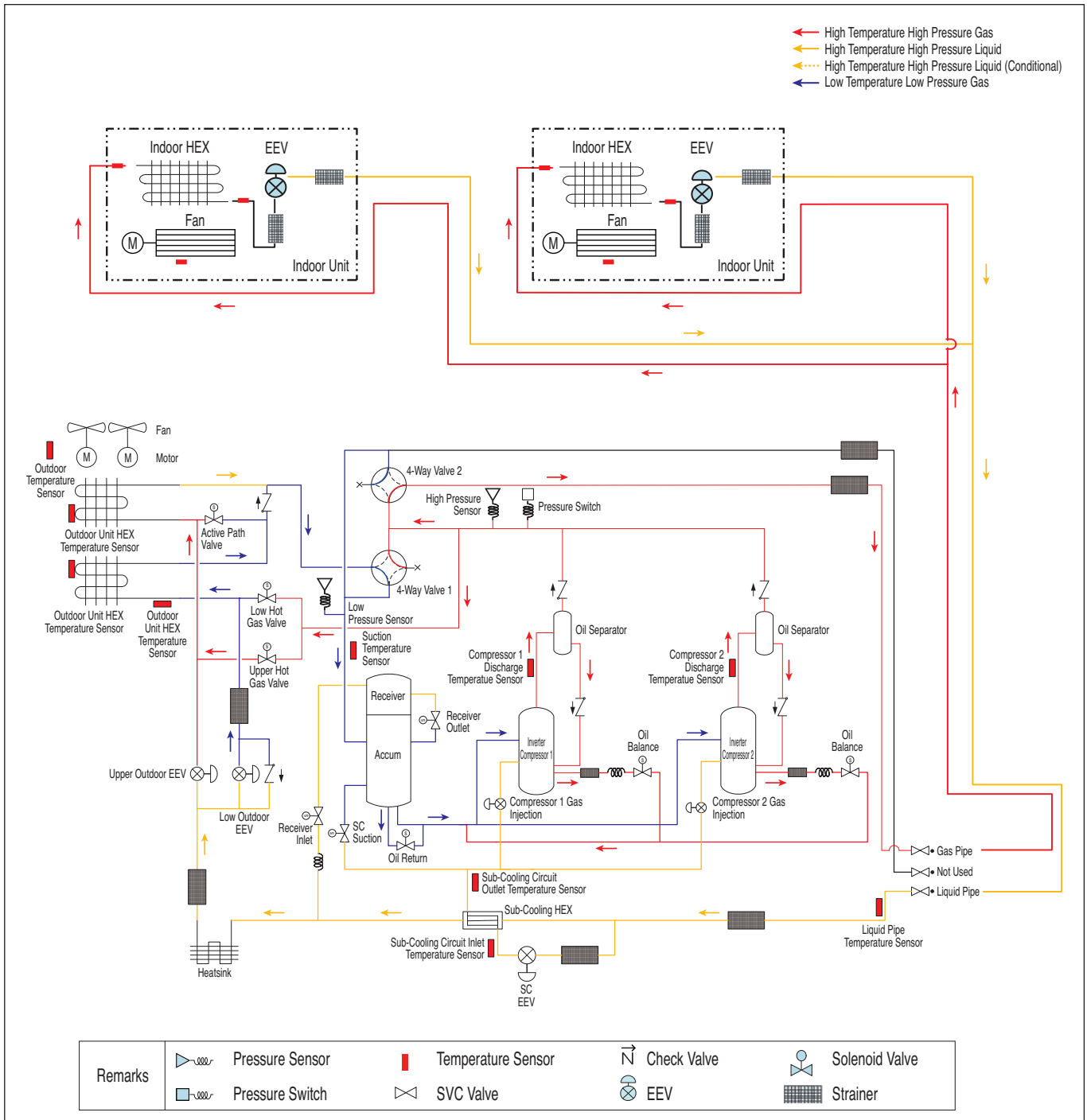

Heat Pump – Low HEX Defrost Operation

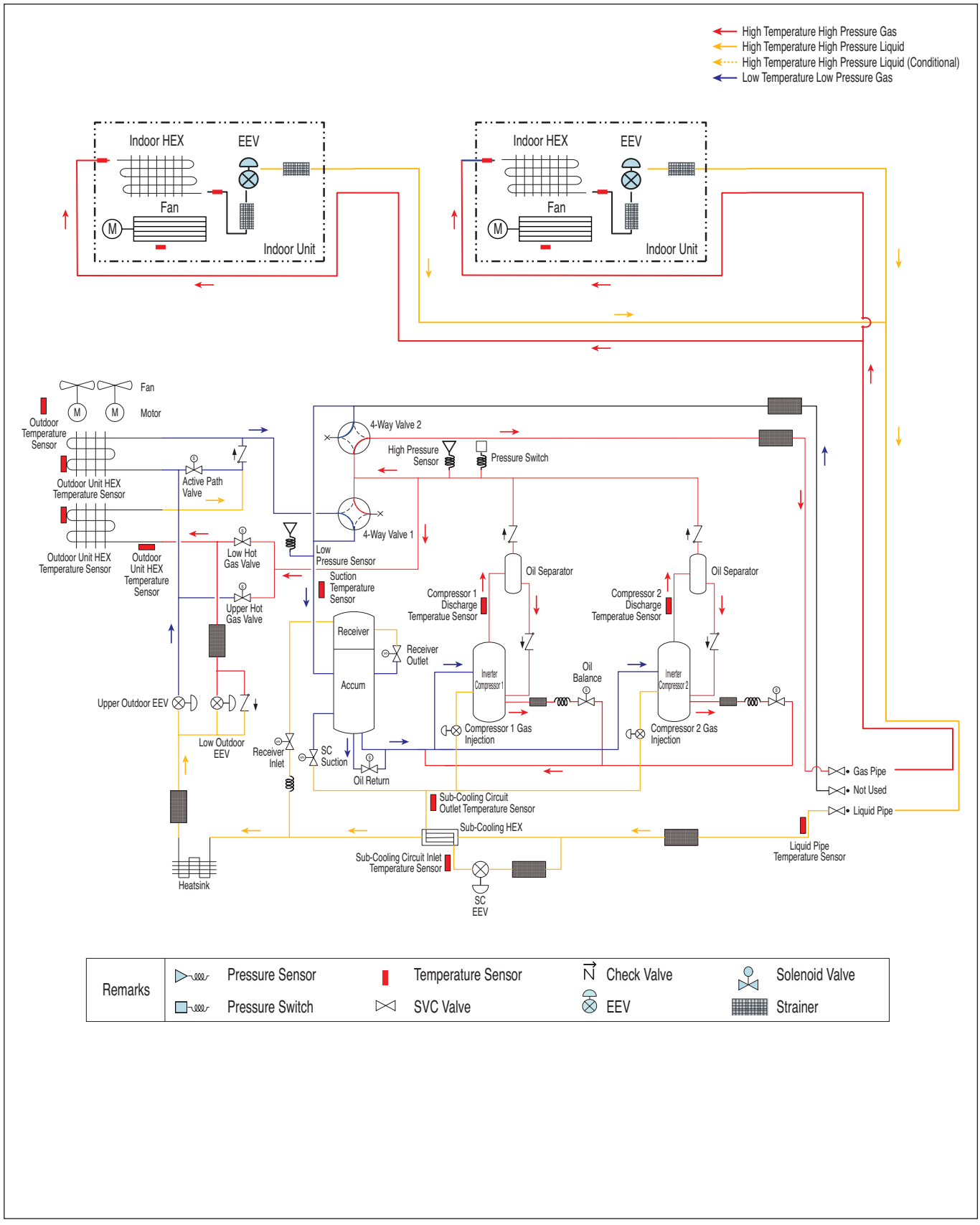

7. Wiring Diagrams

5.1.1 8~12HP

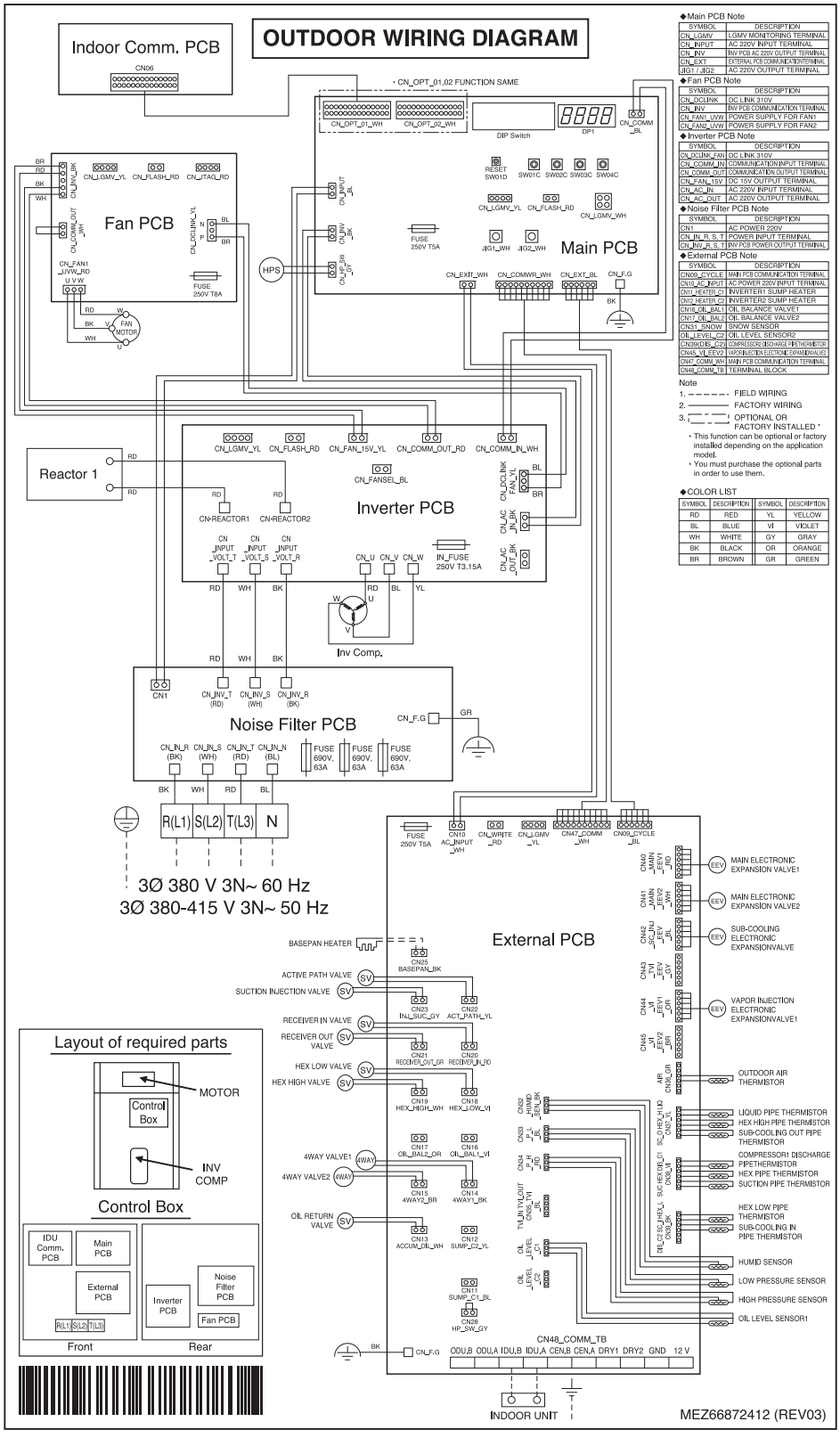

5.1.2 14~16HP (Suffix : BTK, LEU, LRU, MEA)

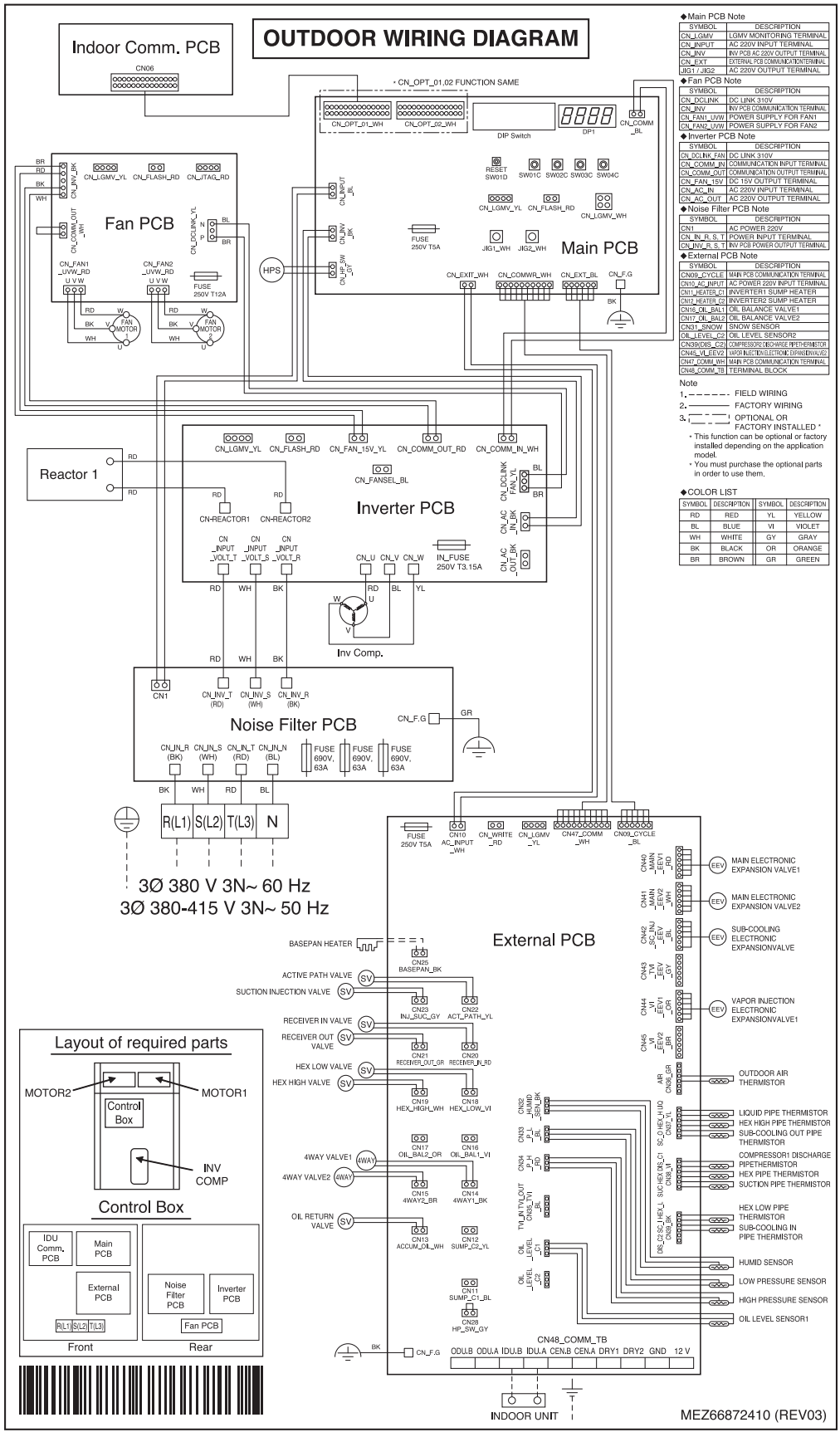

5.1.3 14~16HP (Suffix : SPD, AAS, DEL, LAR)

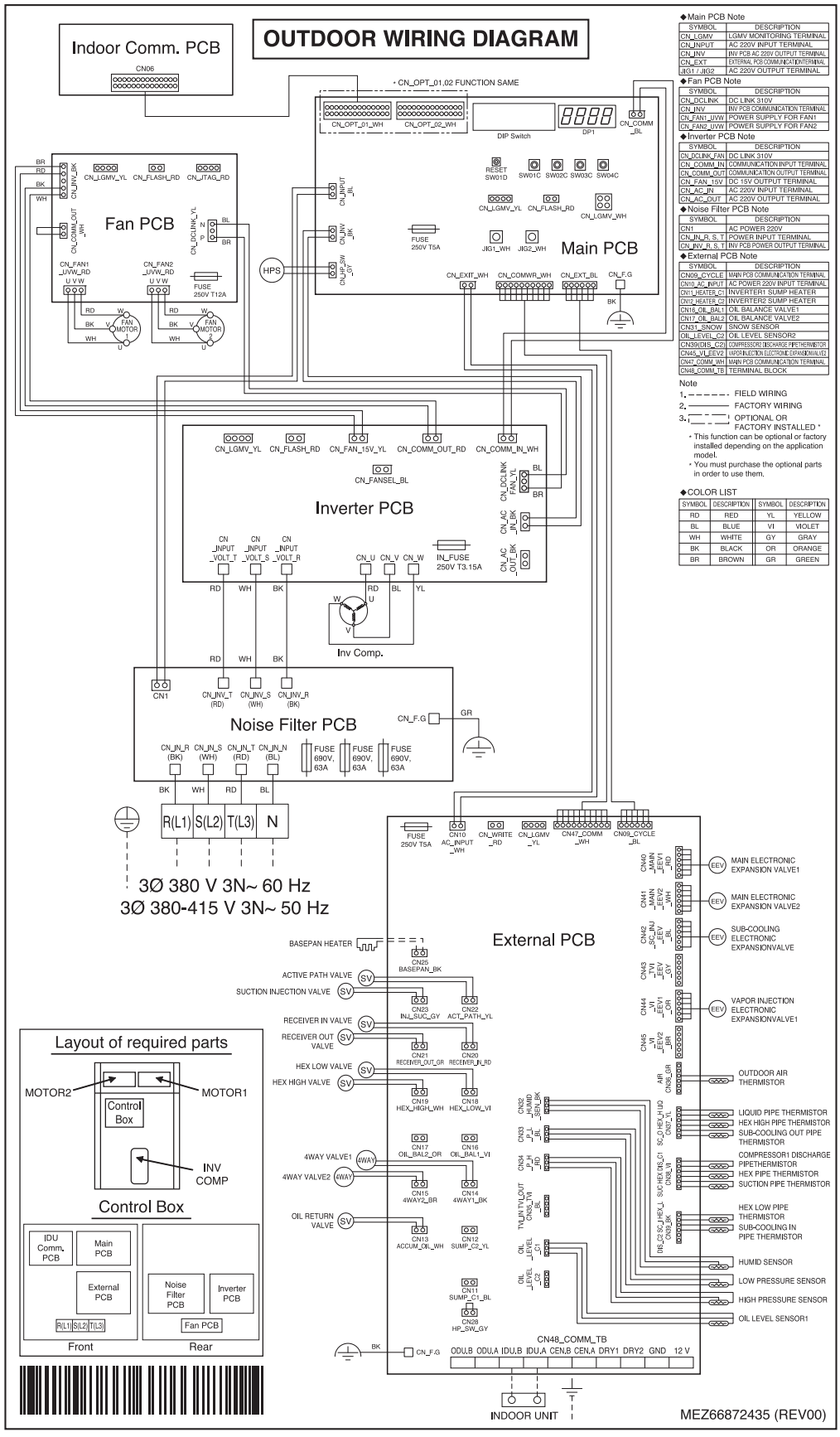

5.1.4 18~26HP (Suffix : BTK, LEU, LRU, MEA)

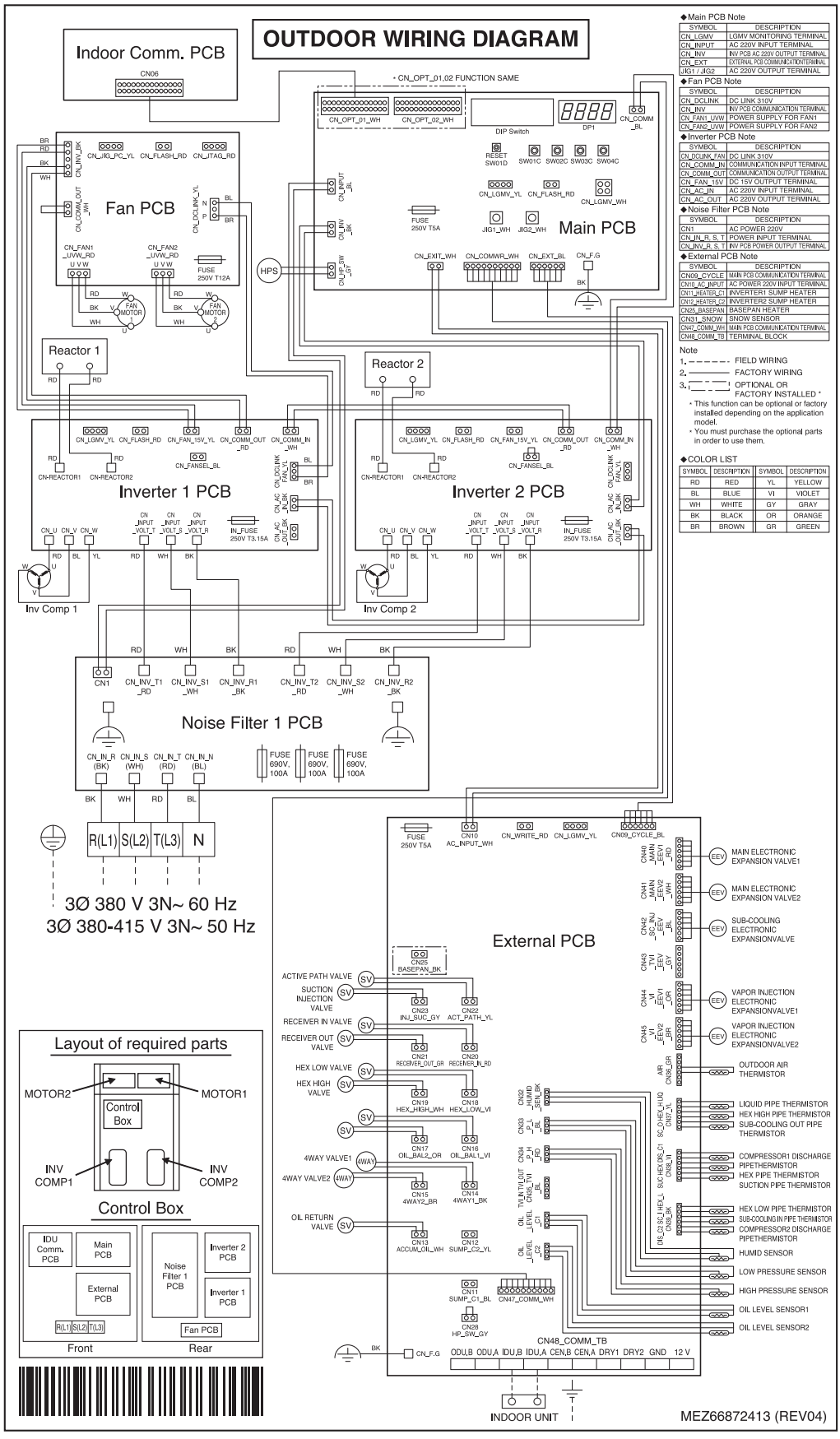

5.1.5 18~26HP (Suffix : SPD, AAS, DEL, LAR)

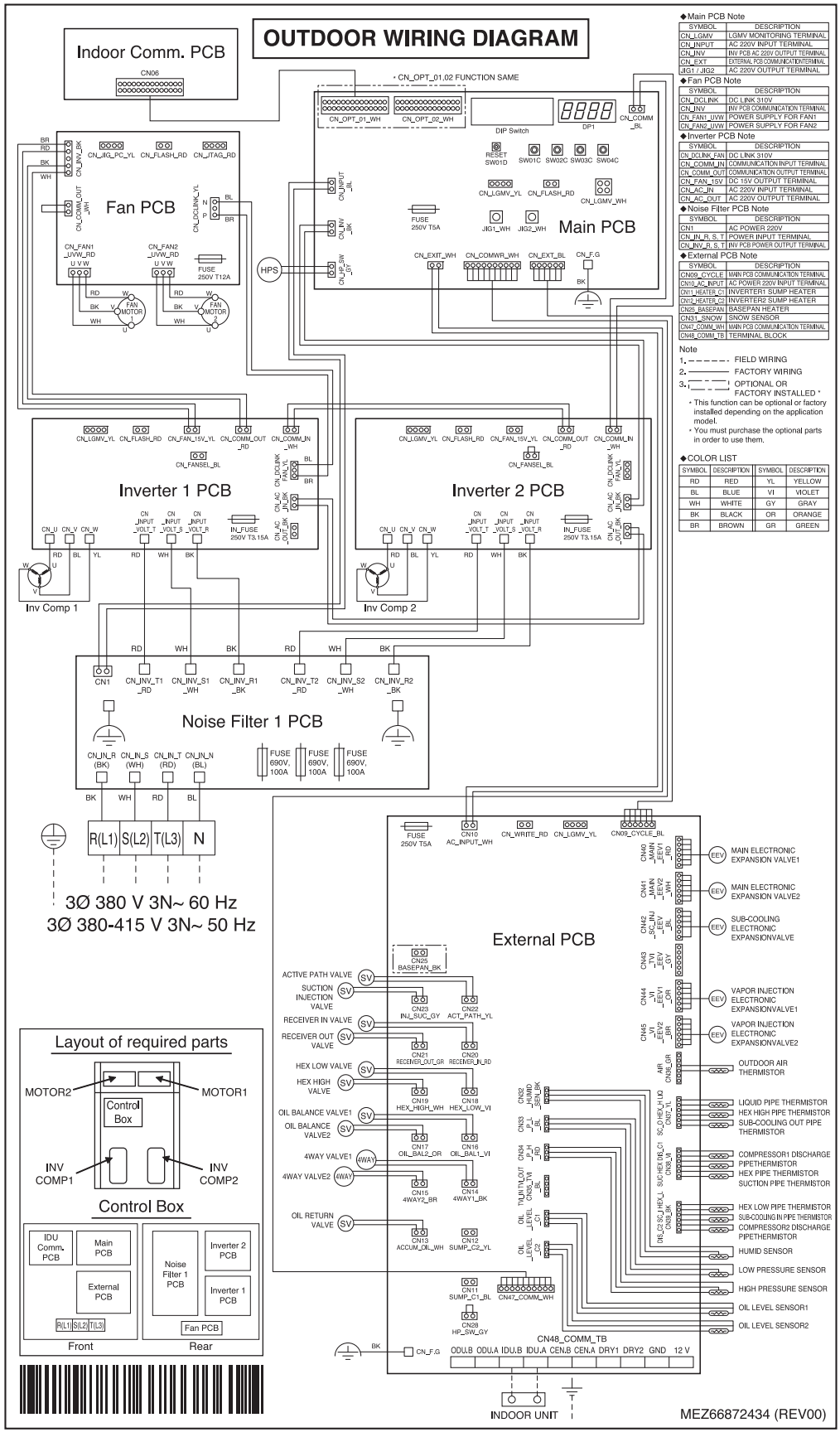

■ Main PCB

1) EBR81880101

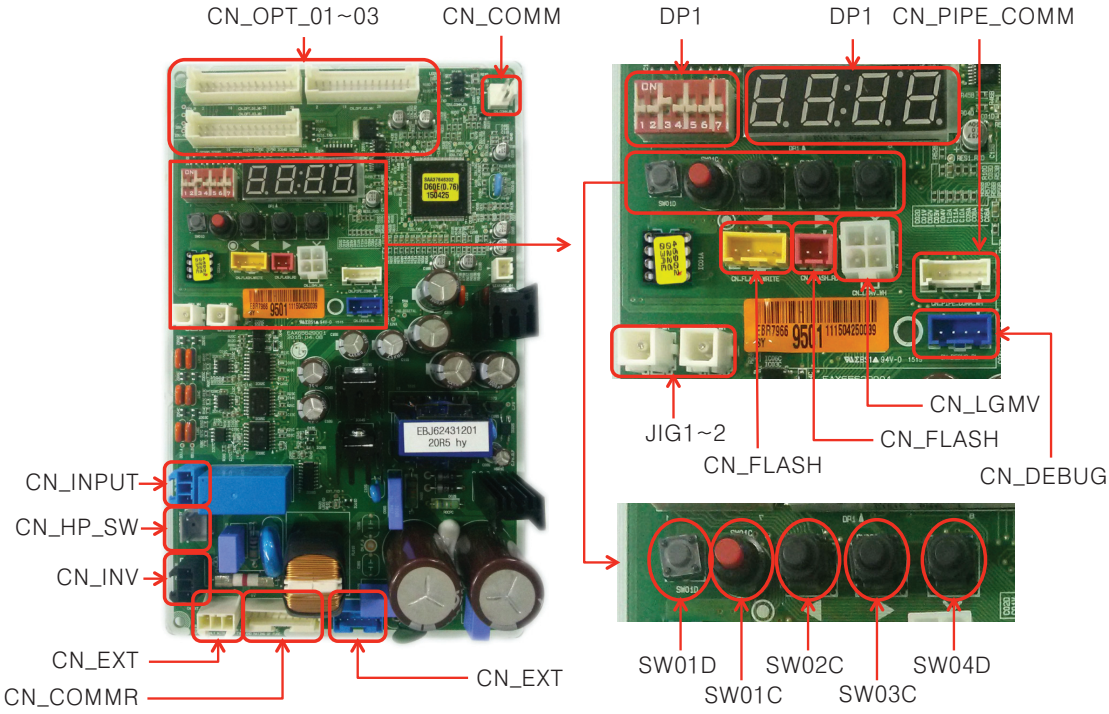

2) EBR81880102 / EBR81880103

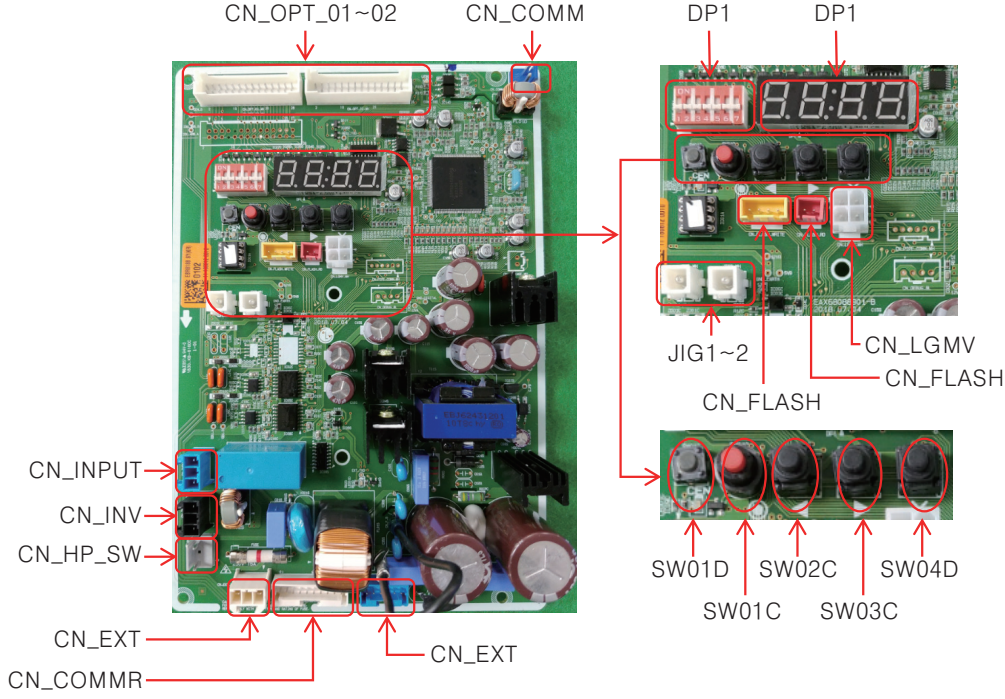

■ External PCB

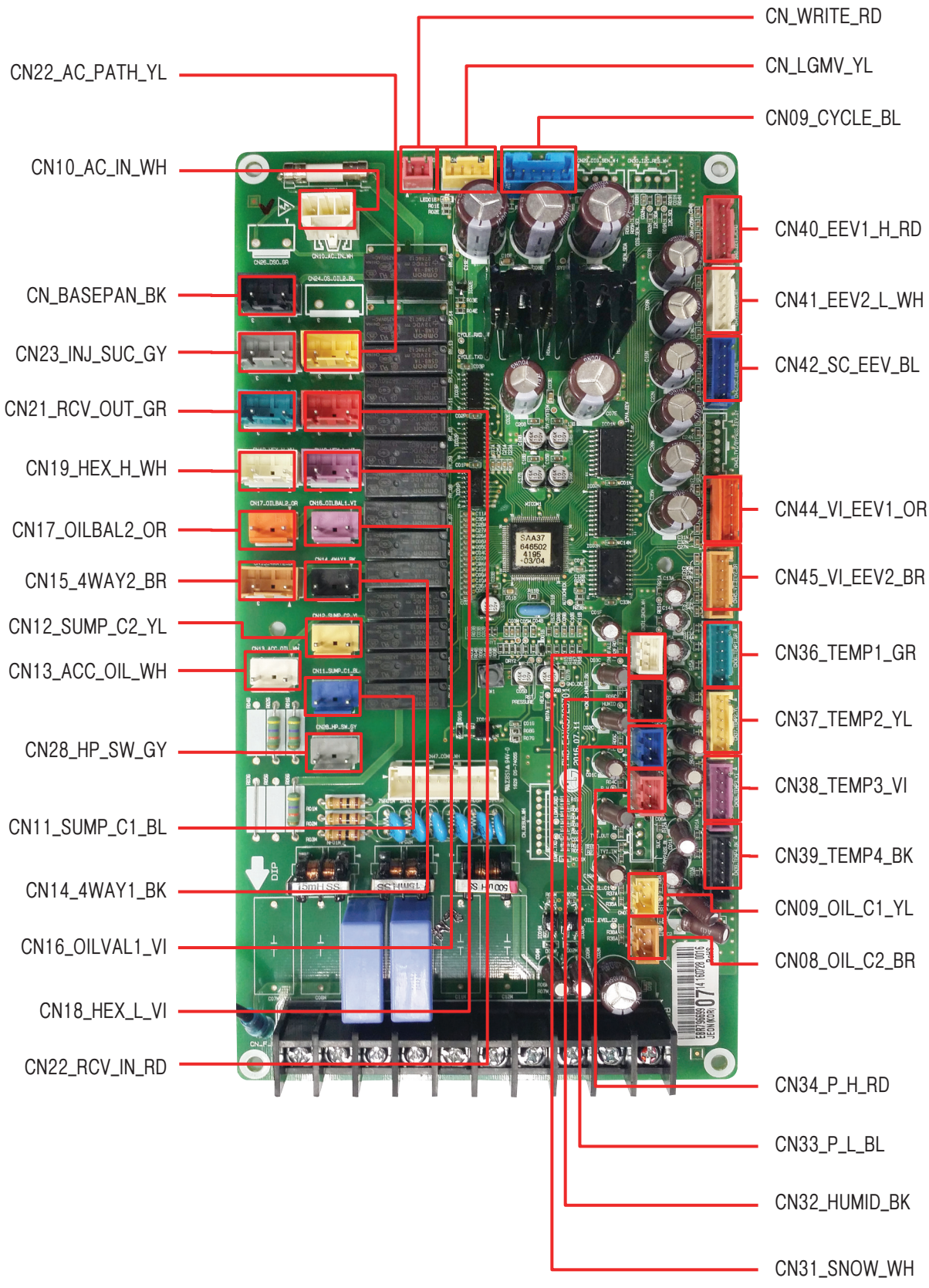

■ Inverter PCB

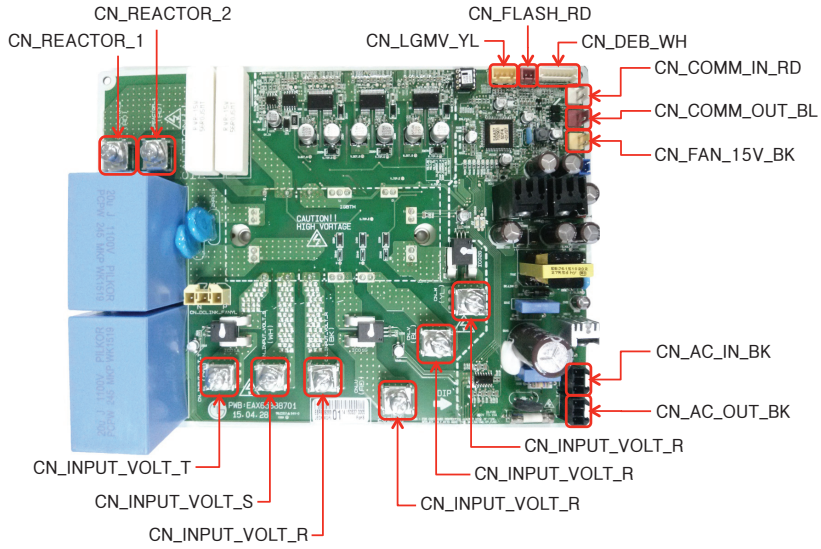

■ Fan PCB

UXA

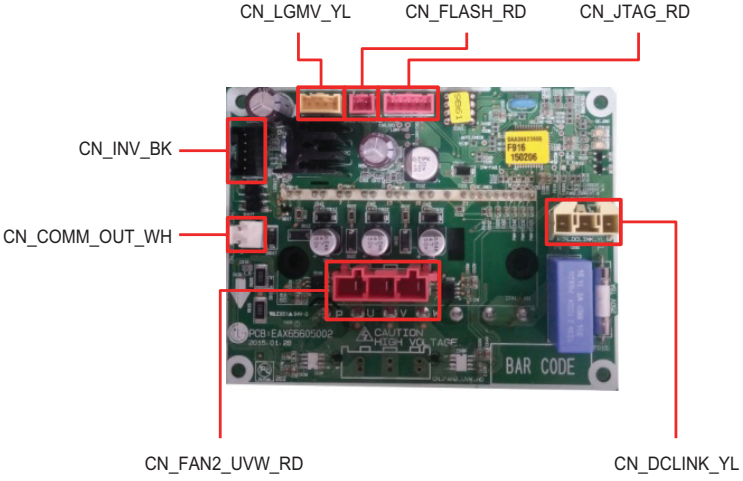

UXB#1

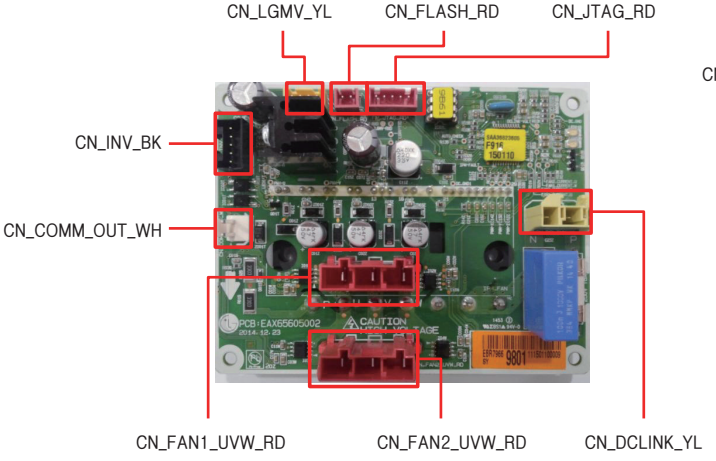

UXB#2

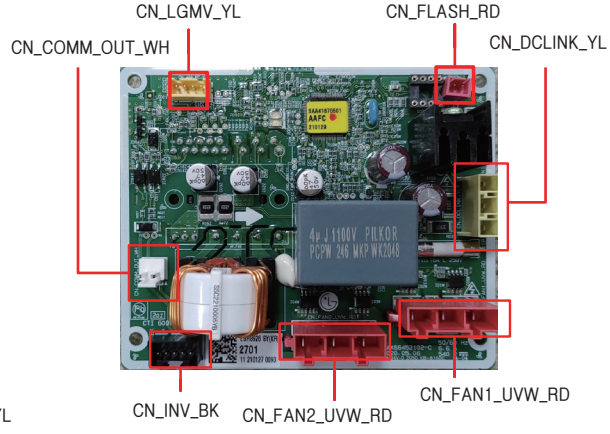

■ Noise filter

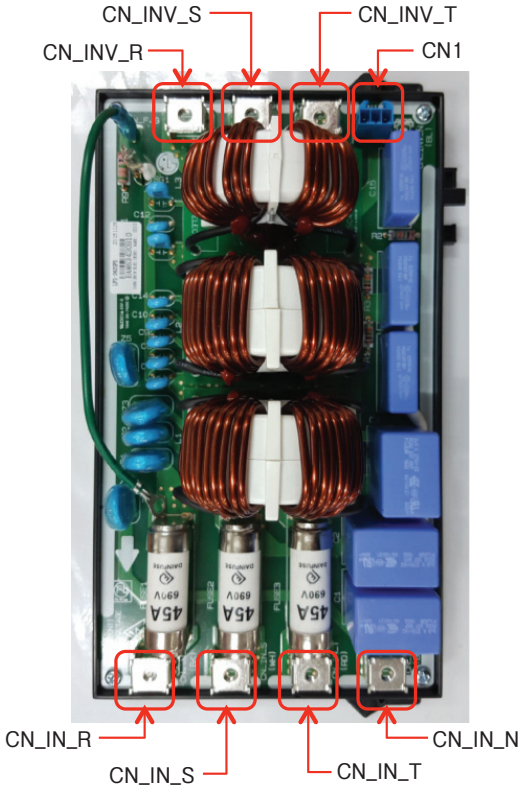

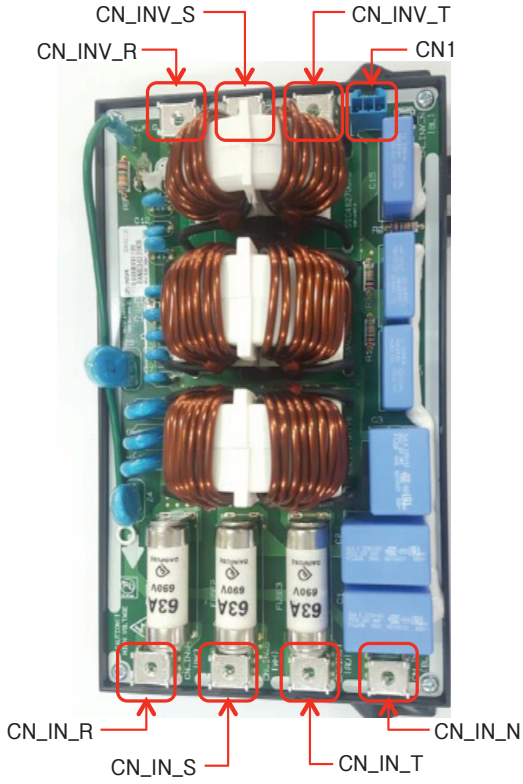

34 kW

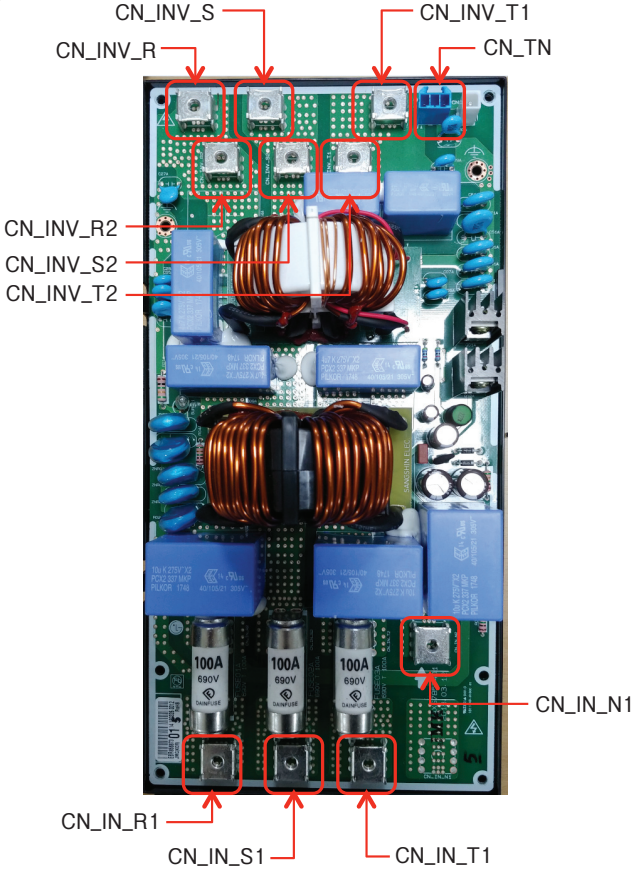

8. Exploded View

Outdoor Unit

6.1.1 8~12 HP (UXA)

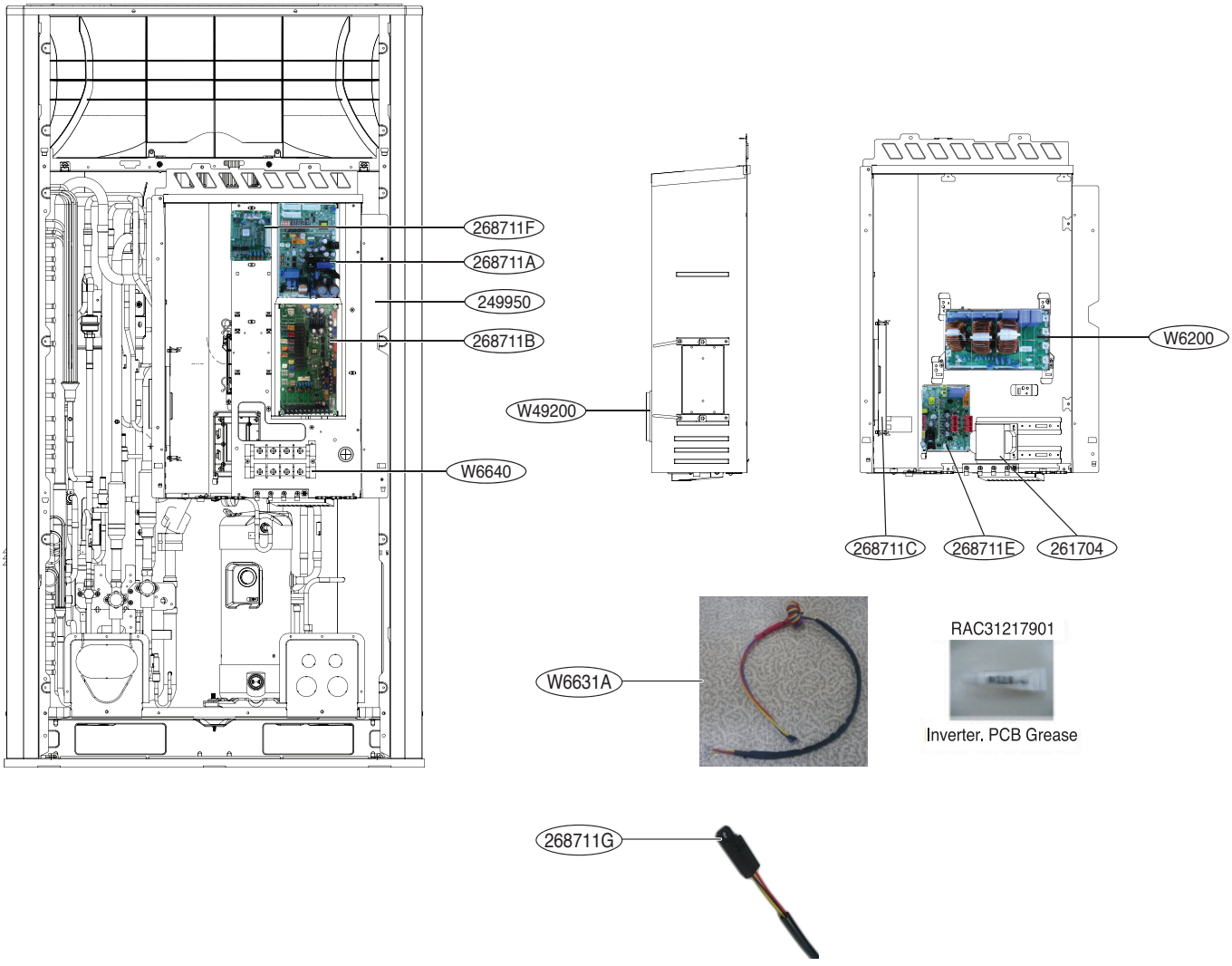

Part	SVC Location NO.	Description
Control Box	249950	Case Assembly, Control Box
Main PCB	268711A	PCB Assembly,Cycle(Onboarding)
External PCB	268711B	PCB Assembly,Main
Inverter PCB	268711C	PCB Assembly,Inv(Onboarding)
Fan PCB	268711E	PCB Assembly,Fan(Onboarding)
Option PCB	268711F	PCB Assembly,Sub
Noise Filter PCB	W6200	Filter,AC Line

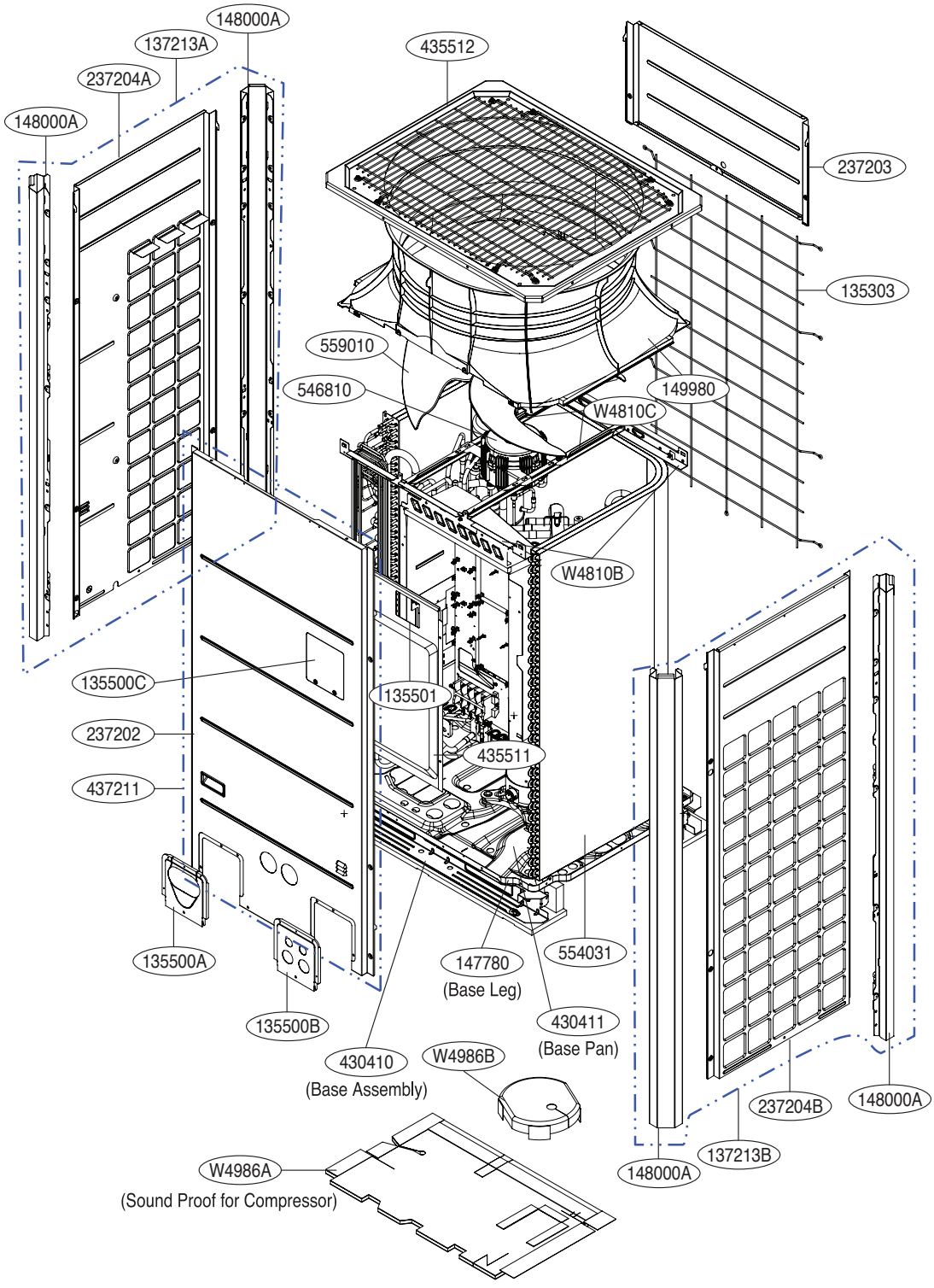

8 HP (UXA)

※ If the serial number is 008, please check visual and P/No. first, then choose the correct P/No.
Service Bulletin No : DMZ202000088-01, DMZ202000101-01

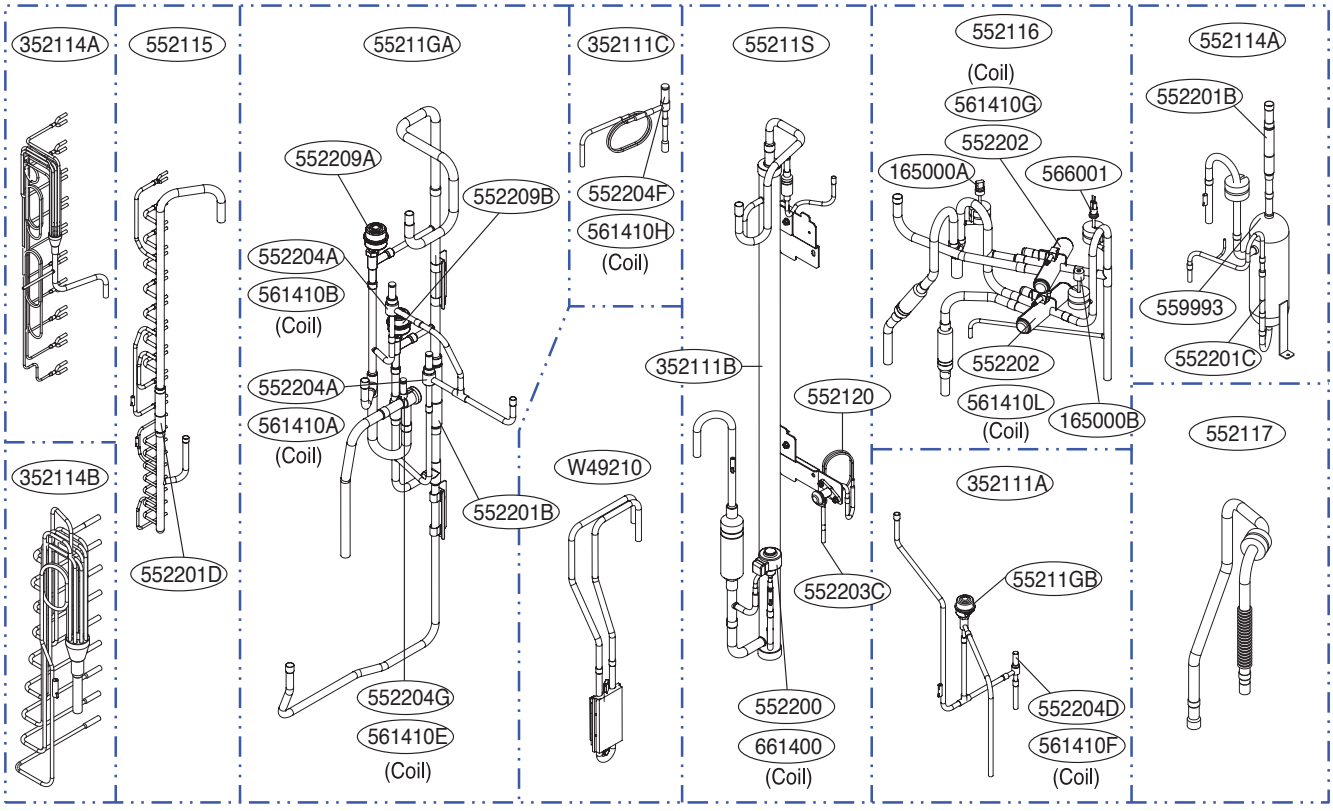

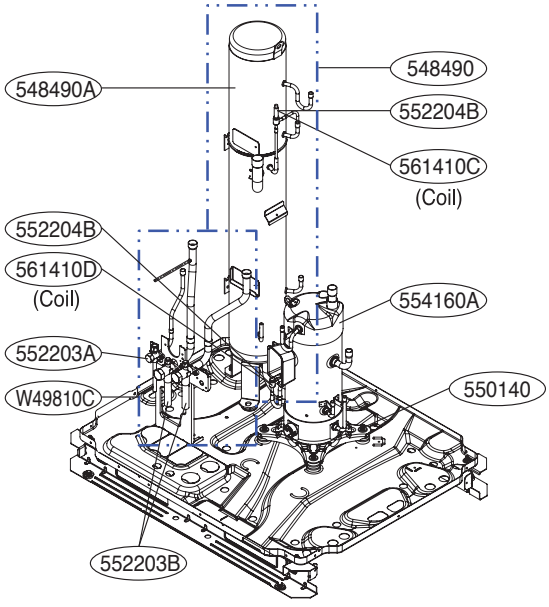

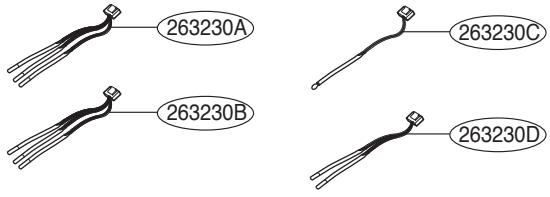

When you service "MEE61984928" in below models, you have to see the service bulletin.

Service Bulletin No. : DMZ202000043-0x~DMZ202000048-0x

W49810A

Comp 1 Oil Level Sensor

MEE61984928

Comp 1 Sump Heater

Part	L/No	Sensor location	Housing color
Temp. Sensor 1	263230A	Air	Green
Temp. Sensor 2	263230B	Suction Pipe + HEX1(Temp. Sensor) + Inverter1 Discharge	Violet
Temp. Sensor 3	263230C	Sub Cool Out + HEX2(Upper Temp. Sensor) + Liquid Pipe	Yellow
Temp. Sensor 4	263230D	HEX3(Low Temp. Sensor) + Sub Cool In	Black

10,12 HP (UXA)

※ If the serial number is 008, please check visual and P/No. first, then choose the correct P/No.
Service Bulletin No : DMZ202000086-01, DMZ202000102-01

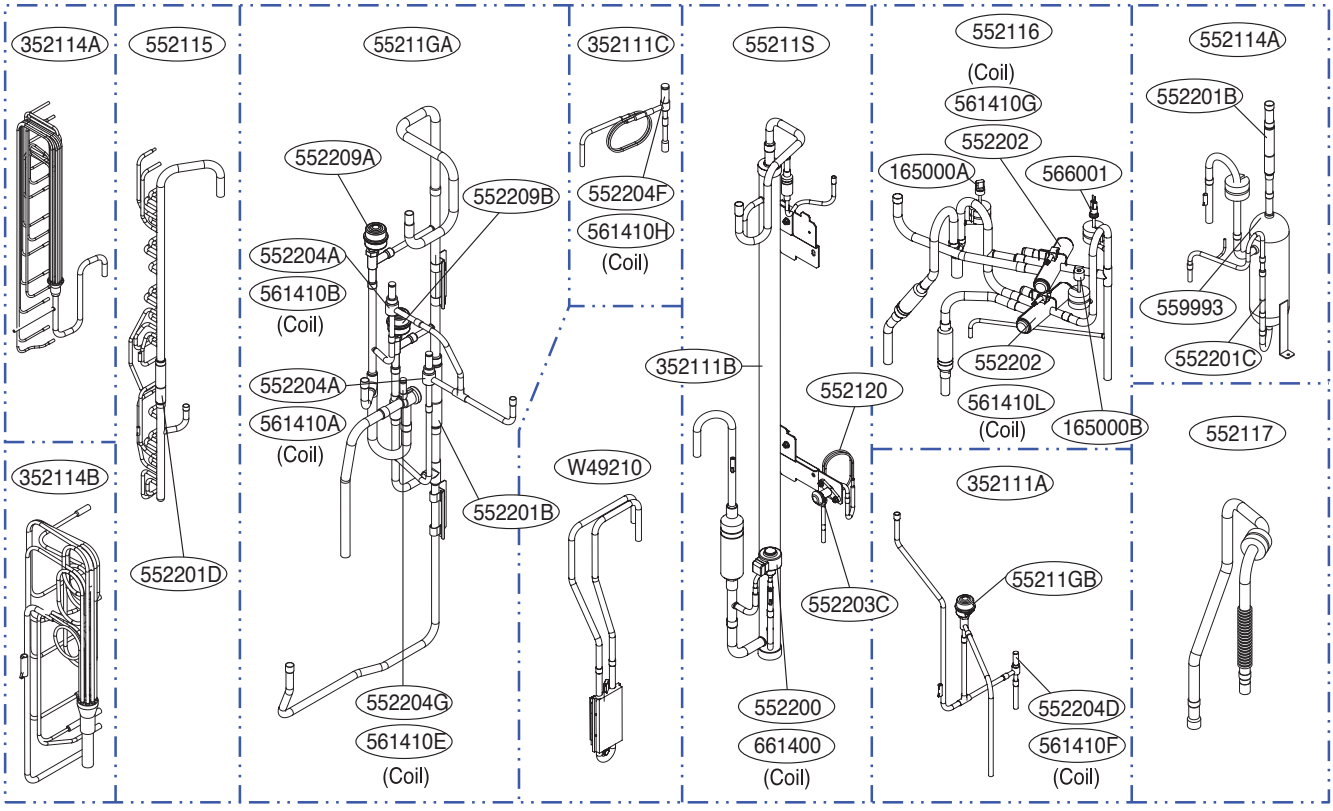

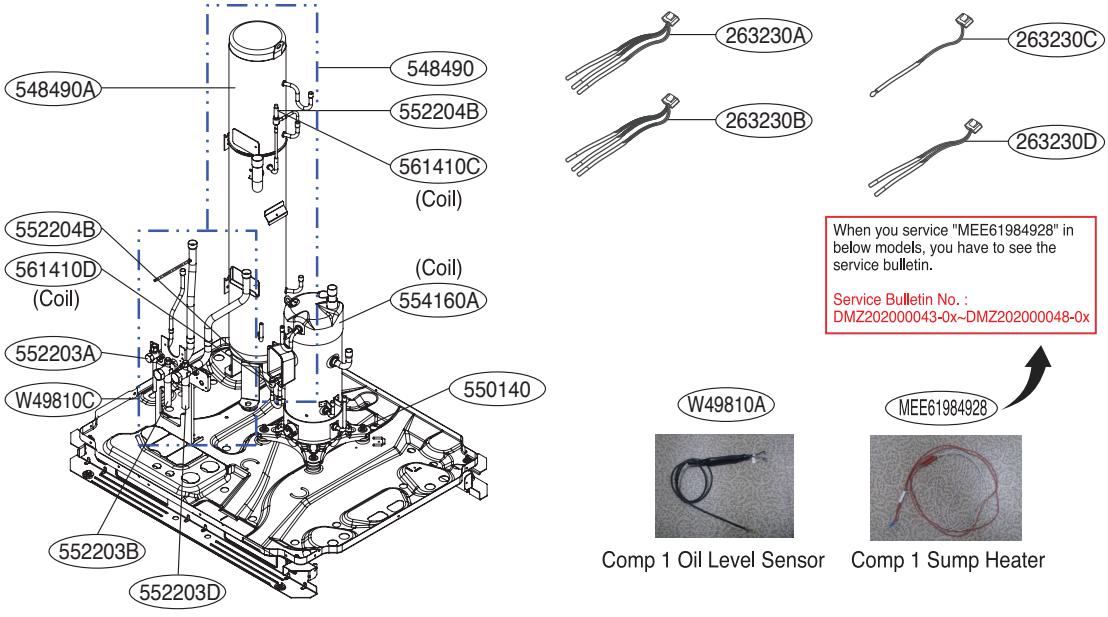

Part	L/No	Sensor location	Housing color
Temp. Sensor 1	263230A	Air	Green
Temp. Sensor 2	263230B	Suction Pipe + HEX1(Temp. Sensor) + Inverter1 Discharge	Violet
Temp. Sensor 3	263230C	Sub Cool Out + HEX2(Upper Temp. Sensor) + Liquid Pipe	Yellow
Temp. Sensor 4	263230D	HEX3(Low Temp. Sensor) + Sub Cool In	Black

6.1.2 14,16 HP (UXB 1 Comp)

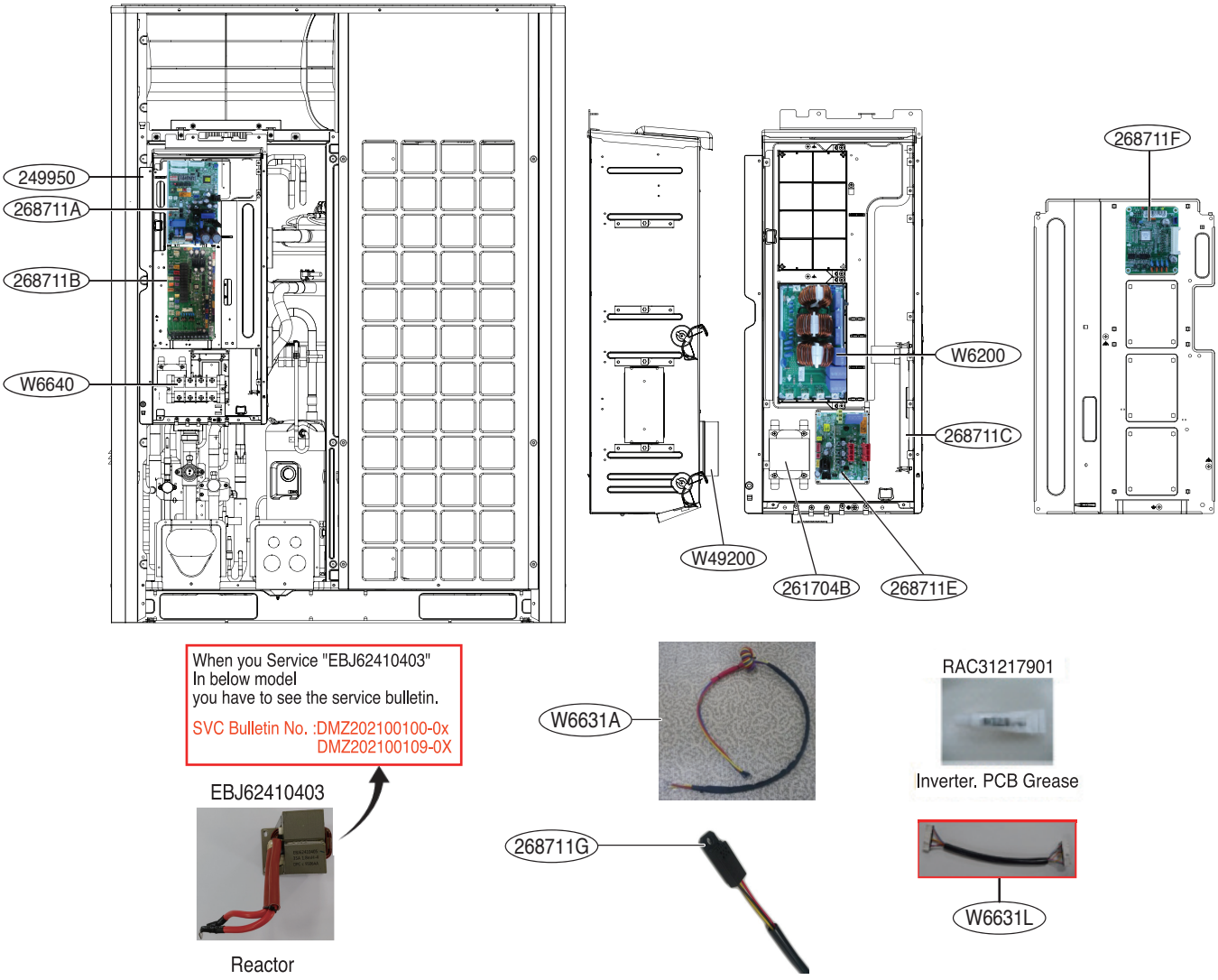

Part	SVC Location NO.	Description
Control Box	249950	Case Assembly, Control Box
Main PCB	268711A	PCB Assembly,Cycle(Onboarding)
External PCB	268711B	PCB Assembly,Main
Inverter PCB	268711C	PCB Assembly,Inv(Onboarding)
Fan PCB	268711E	PCB Assembly,Fan(Onboarding)
Option PCB	268711F	PCB Assembly,Sub
Noise Filter PCB	W6200	Filter,AC Line

6.1.2 14,16 HP (UXB 1 Comp) ARUM140/160LTE5.EWGBAAS, ARUM140/160LTE5.EWGBLAR

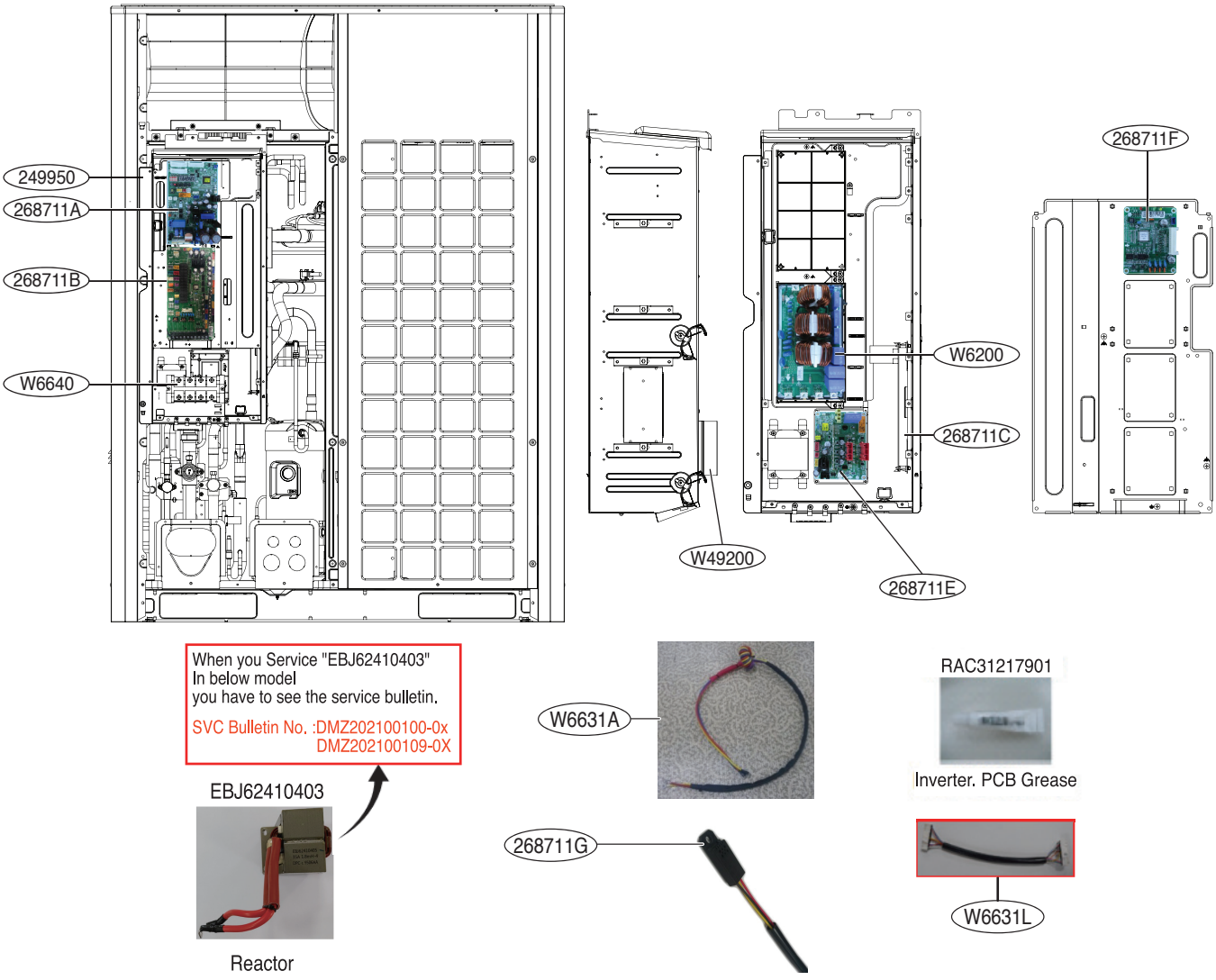

Part	SVC Location NO.	Description
Control Box	249950	Case Assembly, Control Box
Main PCB	268711A	PCB Assembly,Cycle(Onboarding)
External PCB	268711B	PCB Assembly,Main
Inverter PCB	268711C	PCB Assembly,Inv(Onboarding)
Fan PCB	268711E	PCB Assembly,Fan(Onboarding)
Option PCB	268711F	PCB Assembly,Sub
Noise Filter PCB	W6200	Filter,AC Line

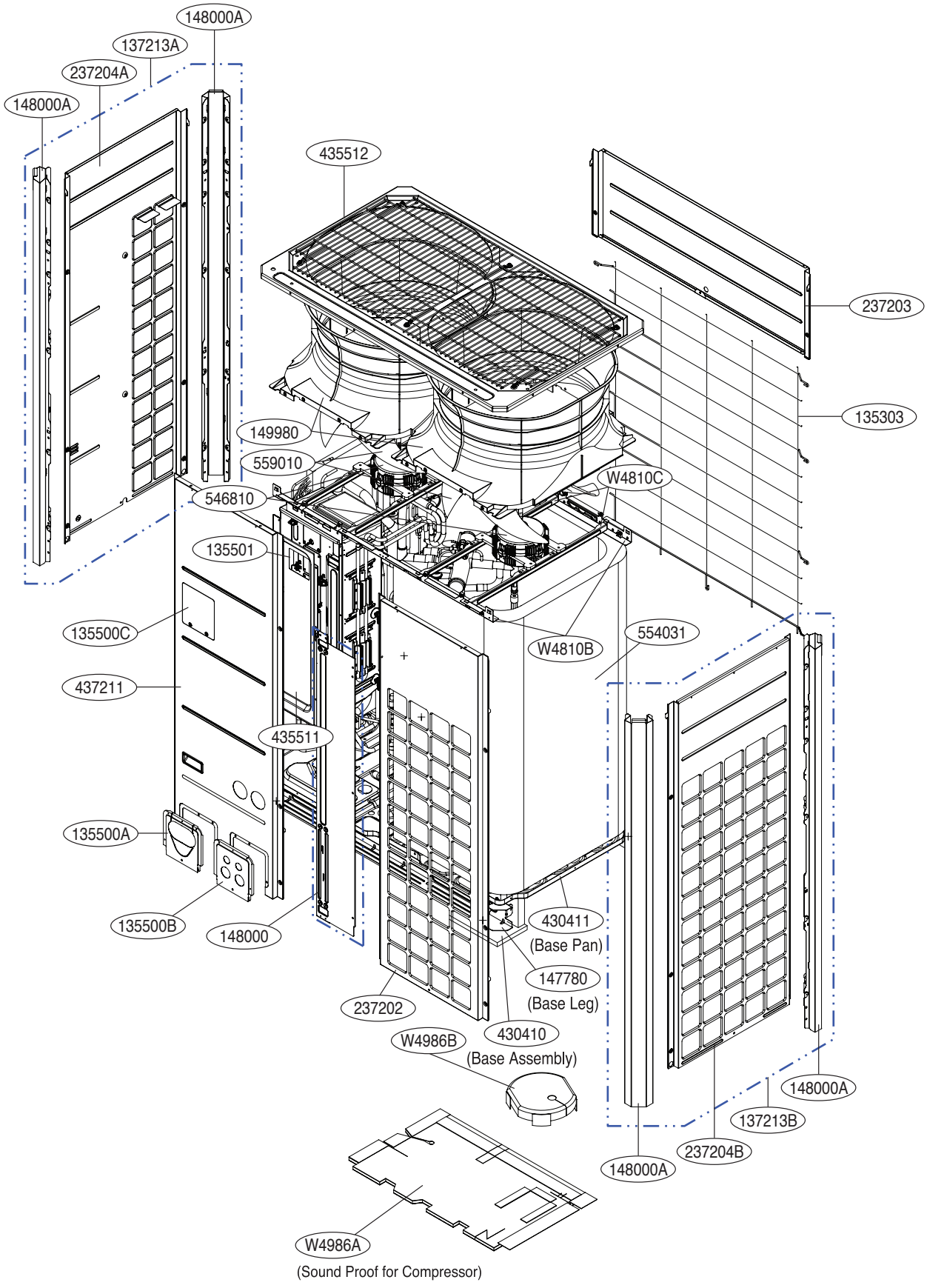

※ If the serial number is 008, please check visual and P/No. first, then choose the correct P/No.
Service Bulletin No : DMZ202000091-01, DMZ202000089-01

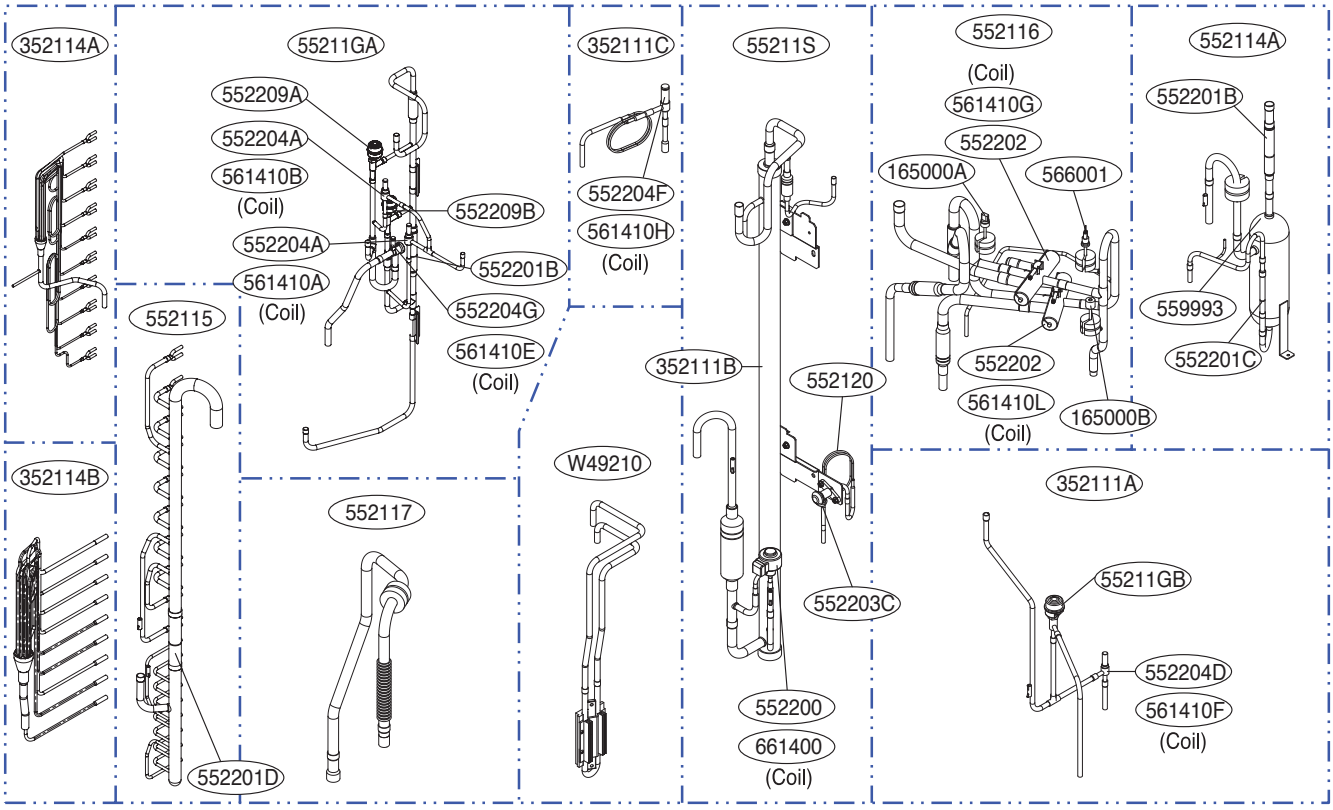

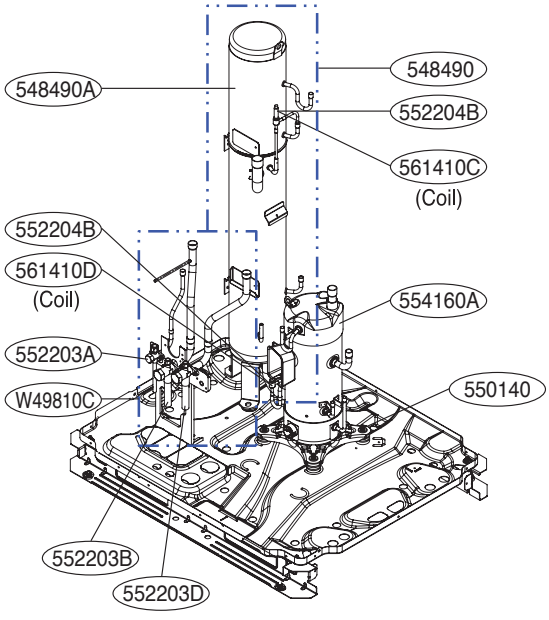

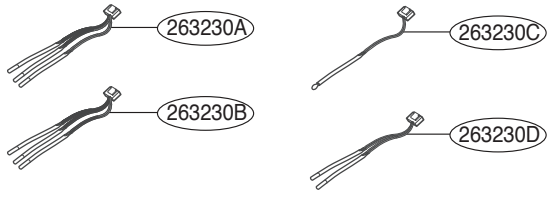

When you service "MEE61984928" in below models, you have to see the service bulletin.

Service Bulletin No. :
DMZ202000043-0x~DMZ202000048-0x

W49810A

Comp 1 Oil Level Sensor

MEE61984928

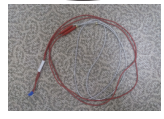

Comp 1 Sump Heater

Part	L/No	Sensor location	Housing color
Temp. Sensor 1	263230A	Air	Green
Temp. Sensor 2	263230B	Suction Pipe + HEX1(Temp. Sensor) + Inverter1 Discharge	Purple
Temp. Sensor 3	263230C	Sub Cool Out + HEX2(Upper Temp. Sensor) + Liquid Pipe	Yellow
Temp. Sensor 4	263230D	HEX3(Low Temp. Sensor) + Sub Cool In	Black

6.1.3 18~22 HP (UXB 2 Comp)

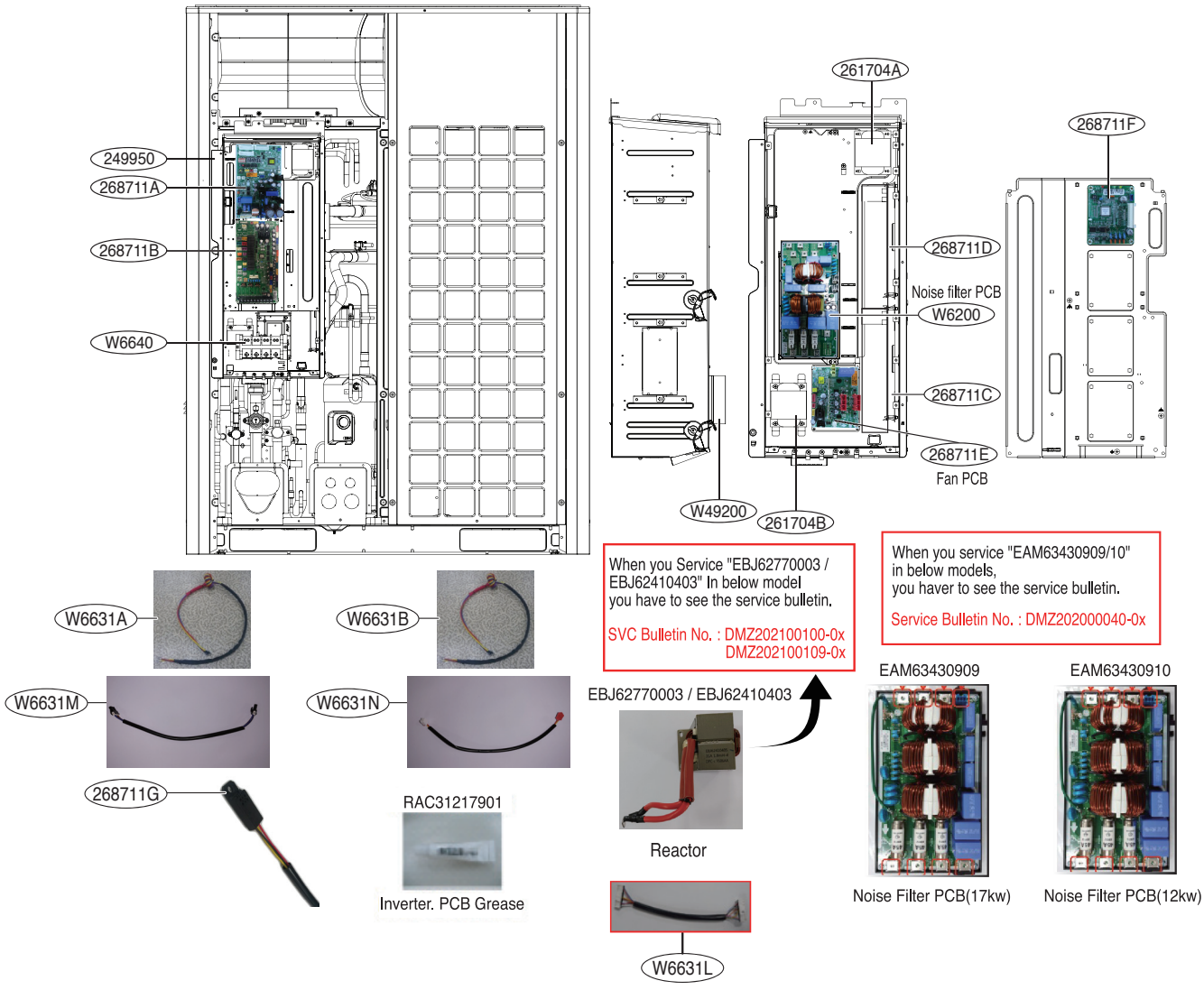

Part	SVC Location NO.	Description
Control Box	249950	Case Assembly, Control Box
Main PCB	268711A	PCB Assembly,Cycle(Onboarding)
External PCB	268711B	PCB Assembly,Main
Inverter PCB	268711C	PCB Assembly,Inv(Onboarding)
Inverter PCB	268711D	PCB Assembly,Inv(Onboarding)
Fan PCB	268711E	PCB Assembly,Fan(Onboarding)
Option PCB	268711F	PCB Assembly,Sub
Noise Filter PCB	W6200	Filter,AC Line

6.1.3 18~22 HP (UXB 2 Comp) ARUM180/200/220LTE5.EWGBAAS, ARUM180/200/220LTE5.EWGBLAR

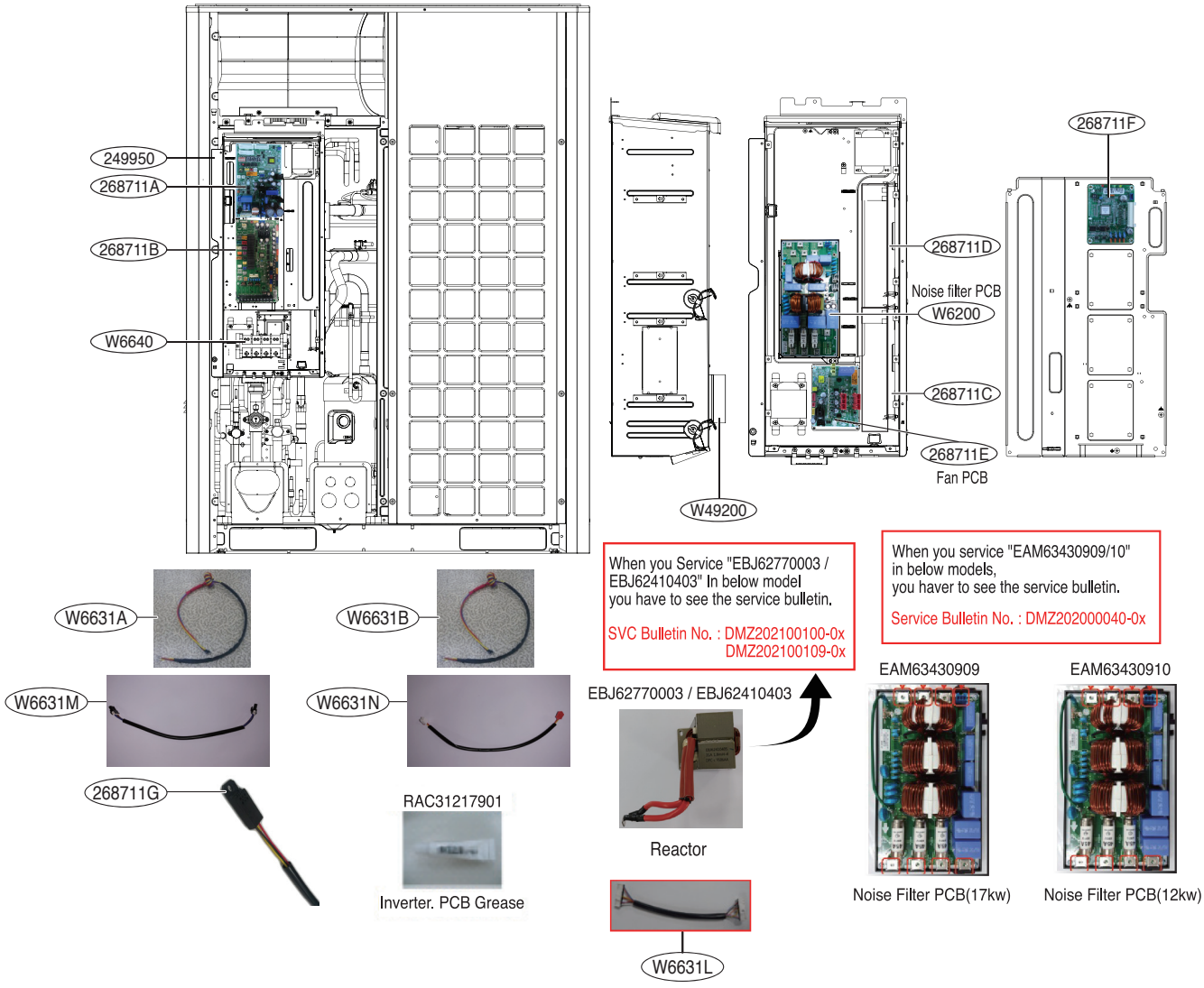

Part	SVC Location NO.	Description
Control Box	249950	Case Assembly, Control Box
Main PCB	268711A	PCB Assembly,Cycle(Onboarding)
External PCB	268711B	PCB Assembly,Main
Inverter PCB	268711C	PCB Assembly,Inv(Onboarding)
Inverter PCB	268711D	PCB Assembly,Inv(Onboarding)
Fan PCB	268711E	PCB Assembly,Fan(Onboarding)
Option PCB	268711F	PCB Assembly,Sub
Noise Filter PCB	W6200	Filter,AC Line

6.1.4 24, 26 HP (UXB 2 Comp)

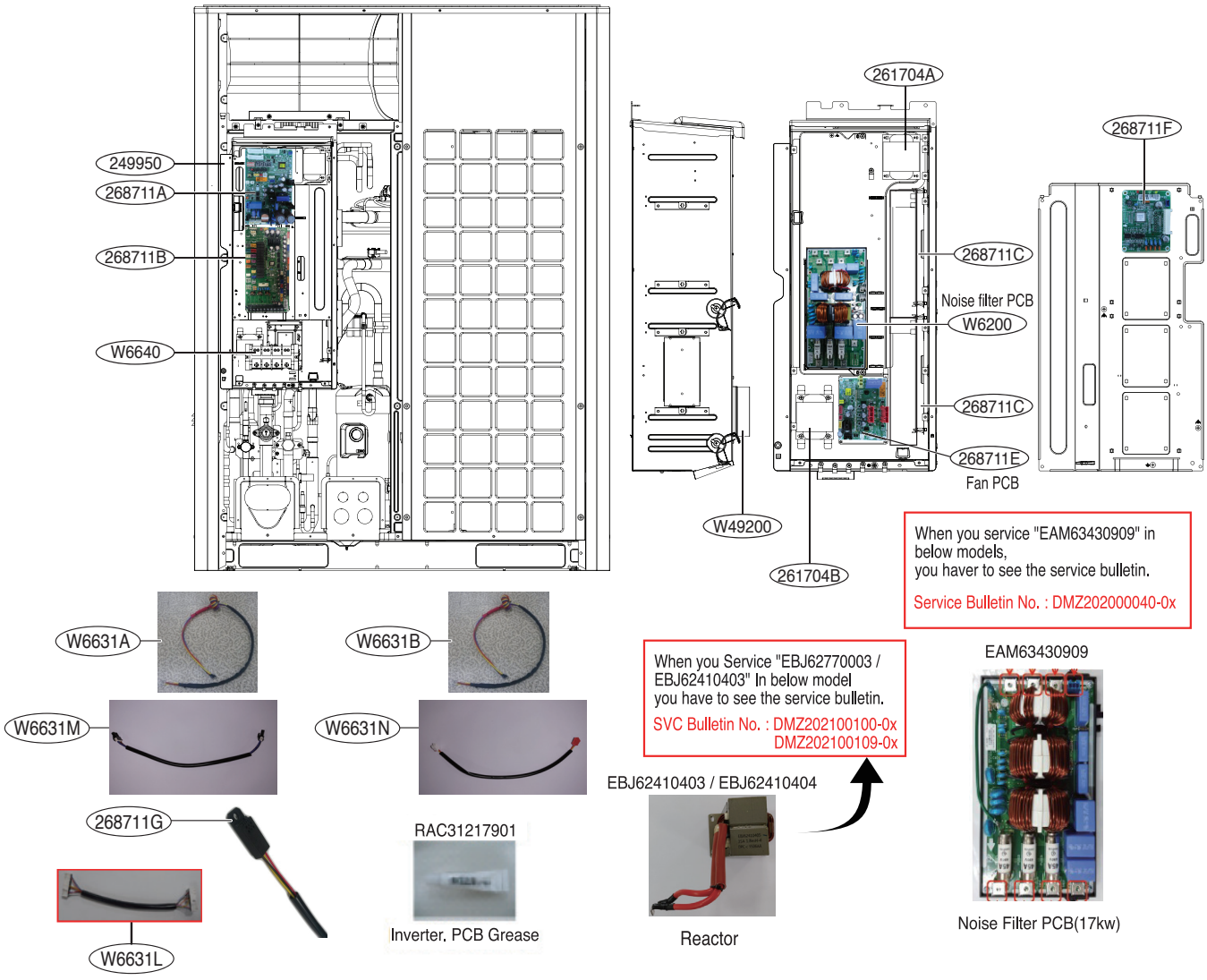

Part	SVC Location NO.	Description
Control Box	249950	Case Assembly, Control Box
Main PCB	268711A	PCB Assembly,Cycle(Onboarding)
External PCB	268711B	PCB Assembly,Main
Inverter PCB	268711C	PCB Assembly,Inv(Onboarding)
Fan PCB	268711E	PCB Assembly,Fan(Onboarding)
Option PCB	268711F	PCB Assembly,Sub
Noise Filter PCB	W6200	Filter,AC Line

6.1.4 24, 26 HP (UXB 2 Comp) ARUM240/260LTE5.EWGBAAS, ARUM240/260LTE5.EWGBLAR

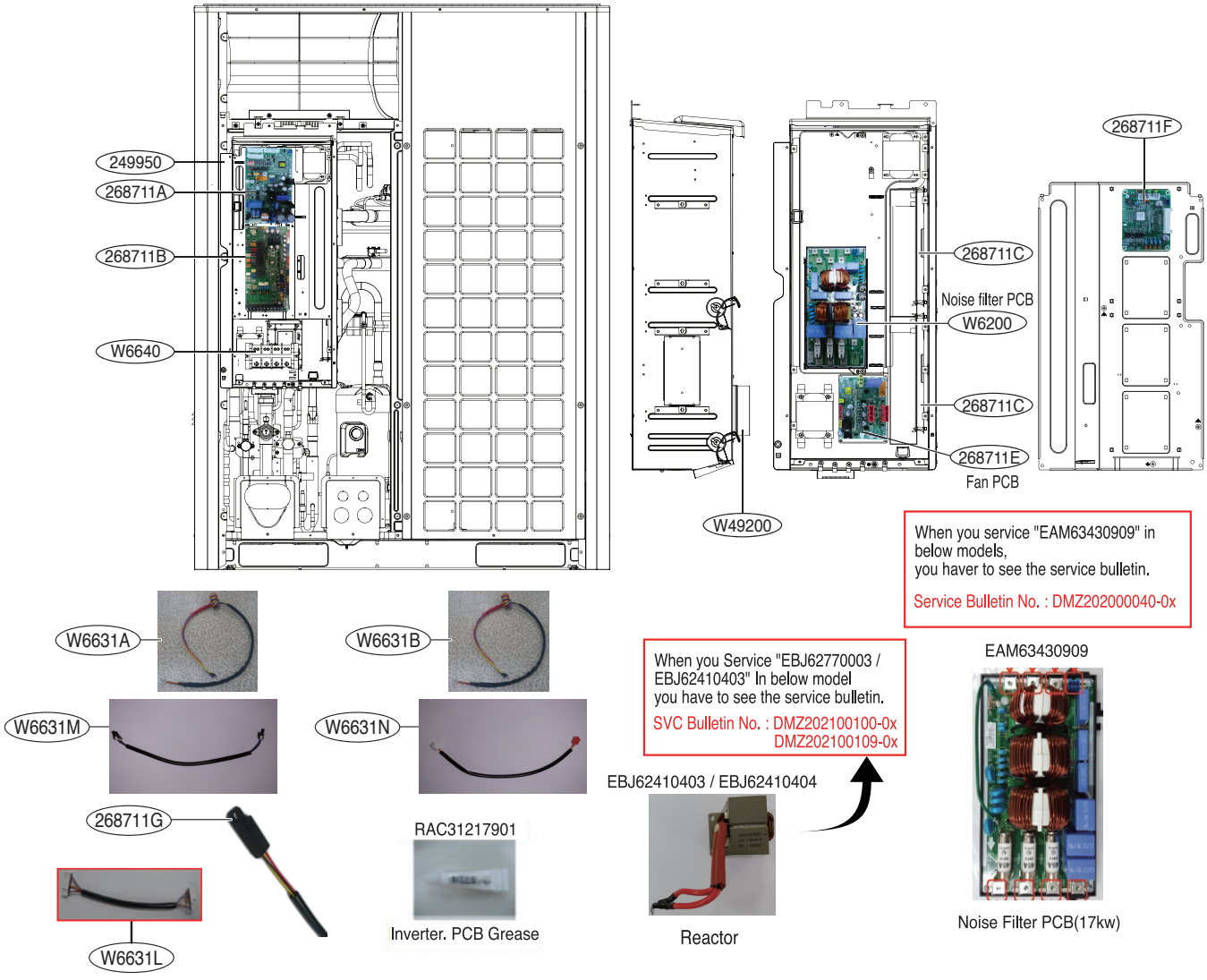

Part	SVC Location NO.	Description
Control Box	249950	Case Assembly, Control Box
Main PCB	268711A	PCB Assembly,Cycle(Onboarding)
External PCB	268711B	PCB Assembly,Main
Inverter PCB	268711C	PCB Assembly,Inv(Onboarding)
Fan PCB	268711E	PCB Assembly,Fan(Onboarding)
Option PCB	268711F	PCB Assembly,Sub
Noise Filter PCB	W6200	Filter,AC Line

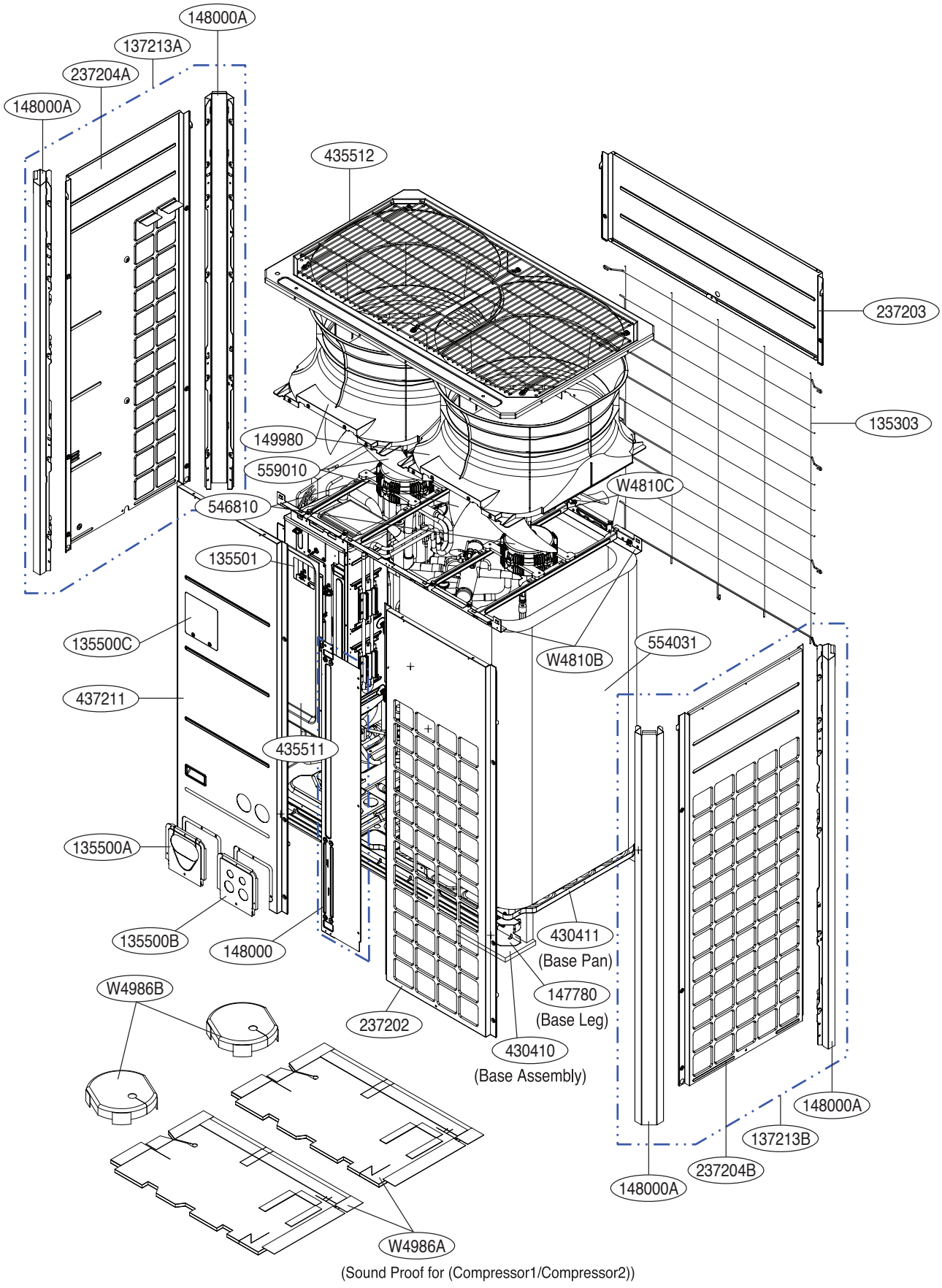

18~22 HP (UXB 2 Comp)

※ If the serial number is 008, please check visual and P/No. first, then choose the correct P/No.
Service Bulletin No : DMZ202000093-01, DMZ202000092-01

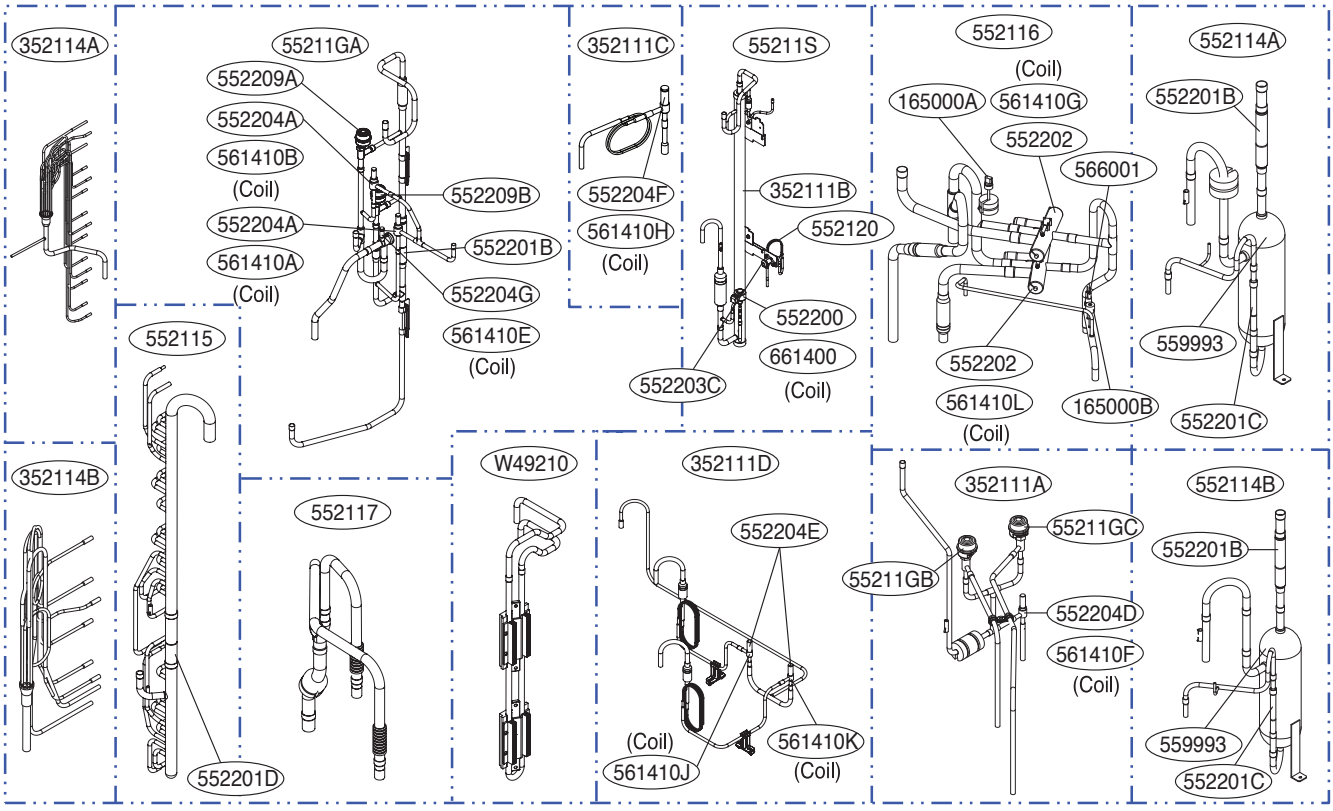

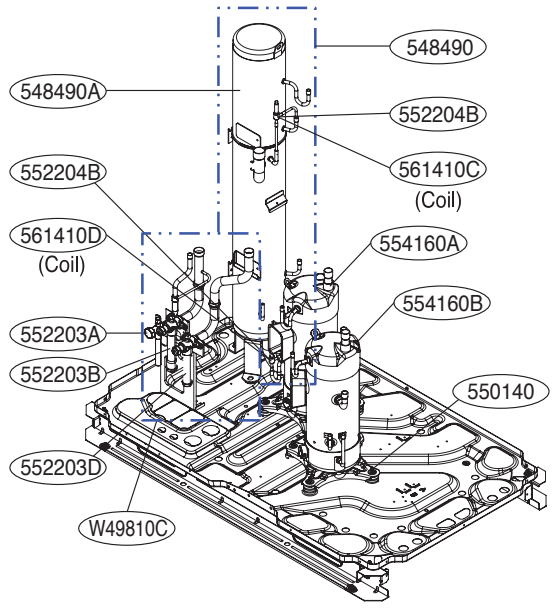

When you service "553000A, 553000B" in below models,
you have to see the service bulletin.

Service Bulletin No. :
DMZ202000043-0x~DMZ202000048-0x

W49810A

(Compressor1 Oil Level Sensor)

MEE61984928

(Compressor1 Sump Heater)

W49810B

(Compressor2 Oil Level Sensor)

MEE61984929

(Compressor2 Sump Heater)

Part	L/No	Sensor location	Housing color
Temp. Sensor 1	263230A	Air	Green
Temp. Sensor 2	263230B	Suction Pipe + HEX1(Temp. Sensor) + Inverter1 Discharge	Purple
Temp. Sensor 3	263230C	Sub Cool Out + HEX2(Upper Temp. Sensor) + Liquid Pipe	Yellow
Temp. Sensor 4	263230D	HEX3(Low Temp. Sensor) + Inverter2 Discharge + Sub Cool In	Black

24, 26 HP (UXB 2 Comp)

※ If the serial number is 008, please check visual and P/No. first, then choose the correct P/No.
Service Bulletin No : DMZ202000093-01, DMZ202000092-01

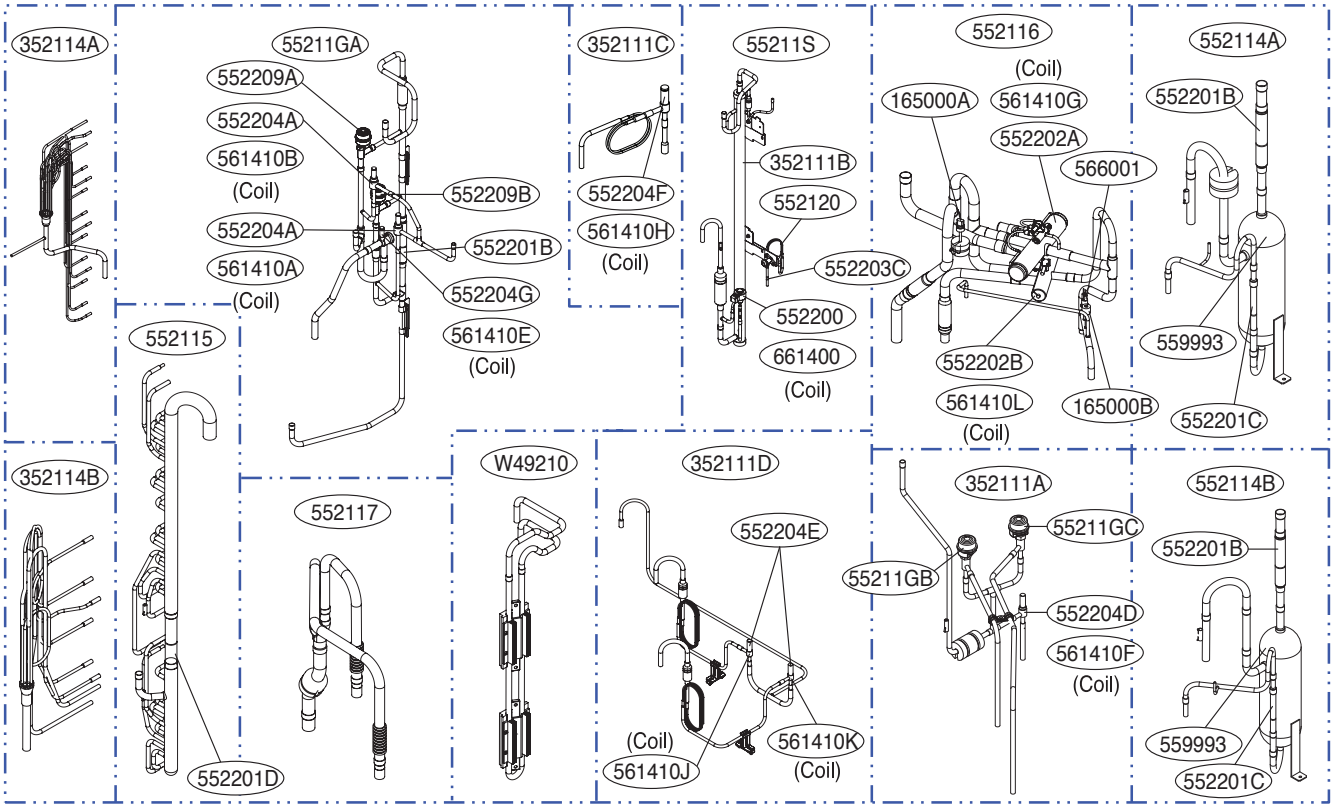

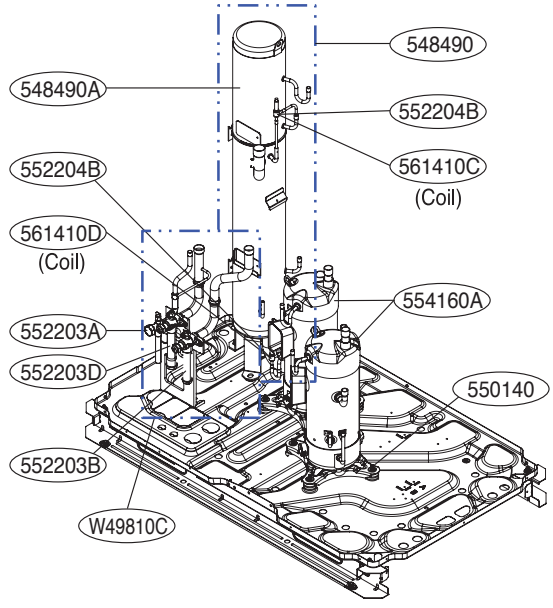

When you service "553000A, 553000B" in below models,
you have to see the service bulletin.

Service Bulletin No. :
DMZ202000043-0x~DMZ202000048-0x

W49810A

(Compressor1 Oil Level Sensor)

MEE61984928

(Compressor1 Sump Heater)

W49810B

(Compressor2 Oil Level Sensor)

MEE61984929

(Compressor2 Sump Heater)

Part	L/No	Sensor location	Housing color
Temp. Sensor 1	263230A	Air	Green
Temp. Sensor 2	263230B	Suction Pipe + HEX1(Temp. Sensor) + Inverter1 Discharge	Purple
Temp. Sensor 3	263230C	Sub Cool Out + HEX2(Upper Temp. Sensor) + Liquid Pipe	Yellow
Temp. Sensor 4	263230D	HEX3(Low Temp. Sensor) + Inverter2 Discharge + Sub Cool In	Black

P/NO : MFL68922505